ORDER OF THE STATE OF WISCONSIN NATURAL RESOURCES BOARD
REPEALING, RENUMBERING AND AMENDING, AMENDING, REPEALING AND RECREATING AND CREATING RULES

The Wisconsin Natural Resources Board adopts an order to **repeal** NR 812.07 (1d), (10m), (13), (19), (21), (29m), (30x), (33) (a), (b), and (c), (35) (Note 2), (35e), (42), (47m), (50m), (54g), (55), (55e), (55m), (57), (59) (60), (63), (70), (72m), (75c), (80) (a) and (b), (85m), (88), (96), (100), (104) (105), (112), (112v) (Note), (113), (124) (Note 2), (124m) (Note), (125), and (128), 812.08 (3) (d), 812.09 (4) (e), (g), (h) (k), (L) (n), (o), (r), (t), (z) (Note 1) and (Note 2), 812.27 (5) (Note), 812.29 (4), 812.30 (1) (Note), 812.31 (intro.) (Note) and (1), 812.32 (2) (a) 5., NR 812.36 (2) (d) 2. (Note) and (3) (b) 6., 812.37 (2) (b) (Note), (i) (Note), (3) (c), (e), (f), (4) (c), and (e) 6. (Note 1) and (Note 2), 812.40 (5) (Note), 812.41 (4), 812.42 (1) (intro.), (b) 5. c. and d., (2) (e) (Note), (6) (a) 2.c. (Note), (8) (b), and (11) (b) (Note), 812 Figures 1 to 75, and 845.04 (13); to **renumber and amend** NR 812.07 (80) (intro.); to **amend** NR 110.15 (6) (d), 146.08 (9), 507.14 (4) (a), 738.03 (9) (Note), 812.07 (10) and (Note), (22), (31), (32), (33), (35) and (Note 1), (49), (50), (56), (67) and (Note), (73), (75), (79m), (79t), (87), (99), (106), (111), (112q), (112v), (114), (116), (121), (124), and (124m), 812.08 (title), (1) (b), (c), (e) and (f), and (3) (a) and (c), 812.09 (1), (2), (3), (4) (intro.), (a), 1., 2., 4., and 5., (b), (d), (f) and (Note), (v), and (5), 812.27 (3), (5), (7), and (11), 812.28 and (Note), 812.29 (1) and (3), 812.30 (1), 812.31, 812.31 (2) (a), (c), (3) (a) (intro.) and 3., (b) (intro.), (4) (a), (d), (e), and (5), 812.32 (1) (a) 2., (c), (2) (a) 1. (Note), and 3., (b), (3), (5) (b) 2. a., b., c., and d., (6) (a), (7) and (9) (d), 812.33 (1) (b), (2) (intro.), (b), and 4. e., 812.36 (1), (2) (intro.), (b) 1., (c) 5., (d) 2., (3) (b) (intro.), 1., and 5., 812.37 (1), (2) (b), (d) (intro.), 1., 2, and 3., (g), (i), (3) (a), (b), (d), (g), (4) (a), (b), (d) and (e) 5., 812.38 (1), 812.39 (1) and (2), 812.40 (5), 812.41 (1) (c), 812.42 (1) (title), (a), (b) 1., 2., 3., 4., 5. (intro.), a., b., (c), (2) (title), (intro.), (a), (b), (c), (d), 1.b., 2., 3., (3), (4) (e), (f), (g) (intro.), (h), (5) (intro.), (b), (c), (6) (a) 1., 2. a. and (Note), b. and (Note), c., (6) (a) 3., (b) (intro.), 1., 2., 4., (c), (d), (e), (7) (title), (a) (intro.), (b), (c), (8) (a) (intro.), (c), (d), (e), (9) (a) (title), 2., 3, 4.a., b., c., (b) 4., (10), (11) (a), (b), (c) 2., (d) (title), (d), (e) (title), (e), (f), (12) (a) (intro.), and 3., 812.43 (1) (a), 1., (b) and (c), 812.44 (1) (a), (d), (3), (5) (b) 6., 13., 14., 16., and (d), 812.45 (1) (a), (b) and (c), 820.12 (10) and (Note), and (12) (Note), and 845.16 (4); to **repeal and recreate** NR 146.02 (4r), 146.12 (1r), 812.03 (4) (Note), 812.07 (23), (24), (27t), (38), (43), (44), (45), (48), (50e), (52), (54), (57m), (57s), (57w), (62), (64), (75L), (75p) and (Note), (75t), (75x), (79), (81), (86), (89), (90), (91), (94), (97r), (95), (96g), (97m), (98), (119), and (123), 812.08 (2), (4) and Table A, 812.09 (4) (w), 812 Subchapter II, 812.27 (1), 812.27 (6) and (8), NR 812.29 (5), 812.34, 812.37 (2) (e), 812.38 (2) (a) 1. and (b) 1., 812.41 (3), 812.42 (13), 812.43 (2), 812.44 (4); and to **create** NR 812.07 (1r), (36), (49) (Note), (50) (Note), (50b), (50d), (55s), (56) (Note), (57k), (60e), (60m), (60s), (69m), (77m), (80) (Note), (94b), (94r), (99) (Note), (112g), (112k), (112p), (116) (Note), and (116m), 812.08 (1) (g) and (1m), 812.09 (4) (a) 6., (u), (4g), (4r), (7) and (8), 812.091, 812.27 (intro.), 812.27 (9) (title), (10) (title), and (12), 812.37 (2) (d) 3. (Note), (j), (k), and (3m), 812.42 (intro.), 812.42 (1) (b) 6., 7., (3m) and Table E, (6) (a) 2. d., (9) (b) 9., and (11) (am), 812 Subchapter VIII, and 812 Appendix relating to well construction and pump installation and affecting small business.

DG-16-16

Analysis Prepared by the Department of Natural Resources

1. Statute Interpreted:
Section 280.11 and 281.34, Wis. Stats.

2. Statutory Authority:
Section 227.11(2)(a)(intro.), chapter 280 and chapter 281, Wis. Stats.

3. Explanation of Agency Authority:
Section 227.11(2)(a)(intro.), Wis. Stats., provides that a state agency, "may promulgate rules interpreting the provisions of any statute enforced or administered by the agency, if the agency considers it necessary to effectuate the purpose of the statute," subject to certain restrictions. Chapter 280, Wis. Stats., establishes the statutory authority and framework for regulation of well drilling, heat exchange drilling and pump installation. Section 280.11, Wis. Stats., specifically directs the department to prescribe, publish and enforce minimum reasonable standards and rules for methods to be pursued to obtain pure drinking water for human consumption, and to establish safeguards deemed necessary in protecting the public health against the hazards of polluted sources of impure water supplies intended or used for human consumption. This statute gives the department general supervision and control over all methods of obtaining groundwater for human consumption including the construction or reconstruction of wells, authority to prescribe, amend, modify or repeal any applicable rule, and to perform any act deemed necessary for the safeguarding of public health. In addition, section 280.13, Wis. Stats., gives the department the authority to promulgate such rules as are reasonably necessary to carry out and enforce the provisions of Chapter 280, Wis. Stats. Chapter 281, Wis. Stats., gives the department authority to regulate groundwater withdrawals (section 281.34, Wis. Stats.), establish, administer and maintain a safe drinking water program no less stringent than the requirements of the safe drinking water act (section 281.17(8)(a), Wis. Stats.) and includes enforcement authorities (sections 281.98, Wis. Stats.).

4. Related Statutes or Rules:
Chapter NR 146, Wis. Adm. Code, implements the licensing and registration requirements of chapter 280, Wis. Stats., for water well drillers, heat exchange drillers, pump installers and rig operators.

Chapter NR 809, Wis. Adm. Code, establishes minimum standards and procedures for the protection of the public health, safety and welfare in the obtaining of safe drinking water.

5. Plain Language Analysis:
The primary objectives of ch. NR 812 revisions are to correct and clarify language, streamline processes, update construction standards, and ensure consistency with federal and state law related to well construction and pump installation. Specific proposed rule changes are described below:

- Correct cross-references in other NR codes.
- Add or revise definitions in s. NR 812.07 to provide clarity and to cross-reference definitions in other statutes and codes. Delete definitions in s. NR 812.07 that are not used in the code.
- Revise s. NR 812.08 to simplify and clarify compliance with separation distances to possible contamination sources. This was done by deleting redundant text descriptions duplicated in a table, simplifying how to identify possible contamination sources, reducing the number of possible contamination sources, deleting duplicate references to the same possible contamination source and moving heat exchange drilling requirements to its own section.
- Revise s. NR 812.09 to simplify and clarify approval procedures, move approval-related language from other sections, and remove product and component approval procedures, which are moved to a new section NR 812.091. The revisions also include a 2-year expiration date for all approvals, updated language to reflect changes in s. 281.34, Wis. Stats., a new requirement for copy of approval to be onsite during construction, and adding a requirement for DNR approval of modified plans.
- Create a new section NR 812.091 to consolidate existing requirements for products and equipment used in well and drillhole construction, pump installation and well treatment. The new section allows products or components that meet certain certifications or standards to be used without prior DNR approval, and establishes a process for products or equipment that require prior DNR approval.
- Replace existing NR 812 Subchapter II with a revised NR 812 Subchapter II. The subchapter revises content to:

- Streamline and modernize the construction requirements for new well construction and provide for new methods of well drilling.
- Clarify driller responsibilities for submitting reports, following up on problem wells and ensuring that flowing wells are controlled.
- Add a requirement for electronic submittal of well construction reports after January 1, 2023.
- Add casing options by allowing new methods of joining plastic casing.
- Change the casing depth requirement for wells completed in limestone to require 60 feet of casing when the depth to limestone is less than 20 feet.
- Change the grouting requirements to reduce the number of wells that have drilling mud and cuttings as an annular space seal.
- Provide for additional grouting materials for use in well construction.
- Reduce the need to collect drill cuttings samples from high capacity wells for submittal to the Natural History Survey.
- Add the ability to use bentonite chips to help drillers grout through large fractures.
- Require the filling and sealing of unused seasonal and high capacity irrigation wells after 3 years.
- Clarify license requirements for the filling and sealing of drillholes.
- Clarify and streamline the filling and sealing requirements for wells and drillholes.

- Revise multiple sections of NR 812 Subchapter III to:
  - Be consistent with changes made to other NR 812 sections.
  - Be consistent with other state statutes and codes.
  - Update cross-references and figure numbers.
  - Correct errors or unclear language.
  - Be consistent with consolidation of sampling requirements into new section NR 812.46.
  - Streamline and simplify installation of bacteria treatment for a private well by eliminating the approval requirement in s.NR 812.37 and replacing it with a well compliance inspection.
- Revise s. NR 812.42 to clarify and simplify language, remove redundancies located in other sections, move out-of-context text and create a new table of historic separation distances to possible contamination sources.
- Revise s. NR 812.43 to correct cross-references, remove language regarding high capacity wells that is moved to s. NR 812.09, and add language regarding variance for crystalline bedrock casing depth that is moved from s. NR 812.14(1).
- Revise s. NR 812.44 to clarify who can conduct property transfer well inspections and how the inspection form is completed, to be consistent with consolidation of sampling requirements into new section NR 812.46, and to correct errors or unclear language.
- Revise s. NR 812.45 to correct cross-references to citable offenses that were moved during the current code revision.
- Create a new section NR 812.46 to consolidate existing sampling and reporting requirements into one place. The new section also increases the laboratory reporting requirement from 30 to 31 days, eliminates repeat nitrate and arsenic testing when certain repeat pump installation work is necessary, and eliminates written laboratory agreements by stating laboratory responsibilities in the code.
- Delete all existing figures and create a new NR 812 Appendix with updated figures.

6. Summary of, and Comparison with, Existing or Proposed Federal Statutes and Regulations:
Federal law does not directly regulate the construction of wells or heat exchange drillholes, and does not regulate the installation of pumps. For public drinking water systems, Wisconsin is a primacy state, with the primary responsibility to enforce state drinking water regulations consistent with the federal Safe Drinking Water Act. One federal requirement of Wisconsin's primacy role is that the state assures that the design and construction of new or substantially modified public water system facilities will be capable of compliance with the State primary drinking water regulations. For non-community public drinking

water systems, ch. NR 812, Wis. Adm. Code, provides the design and construction standards to meet this federal requirement.

7. Comparison with Similar Rules in Adjacent States (Illinois, Iowa, Michigan and Minnesota):
In general, the four surrounding states have similar but less prescriptive rules governing well and heat exchange construction and pump installation compared to Wisconsin. Simplifying and clarifying requirements as proposed in the rule will make Wisconsin's rules more similar to the approach used in surrounding states. A brief comparison with the four adjacent states is provided below on the most substantive changes proposed in these rule revisions.

a. Construction Approvals
Wisconsin law requires prior DNR written approval for certain well and heat exchange construction activities listed in s. NR 812.09, and allows most private wells to be constructed with prior notification to DNR only. The rule eliminates prior DNR written approval for some activities, and standardizes DNR procedures so that all approvals have a two-year expiration date and can be modified on written request. Illinois and Iowa require a state or local permit prior to construction of any well, and permits expire after one year. Minnesota requires notification for some well construction and a permit for other activities; notifications and permits are valid for 18 months. Michigan requires a local permit prior to construction of a well except for irrigation wells.

b. Product Approvals
The rule creates a new section to consolidate existing code requirements for approval of products and components. The section allows products and components that are certified for compliance with specified national technical standards to be used in Wisconsin without prior DNR written approval, and establishes criteria and procedures for DNR review and approval of other products and components. Illinois allows products that are certified to meet third-party testing agency standards. Michigan and Minnesota allow use of water well system components that are certified to meet specified national technical standards, and have criteria for review and approval of other products and components.

c. Location
The rule eliminates text descriptions of separation distances and uses only a table to identify required separation distances between water supplies and potential contamination sources. This is consistent with adjacent states that all use only a table. The rule also reduces the number of required separation distances in Wisconsin from 137 to 75, by eliminating redundant listings, simplifying distinctions in sewer types and removing some requirements. All adjacent states have separation distance requirements, ranging between 17 and 67 possible contamination sources (Illinois-18, Iowa-17, Michigan-25, Minnesota-67).

d. Well Construction
- *Mud and Cuttings*
  The rule limits the ability for the use of drilling mud and cuttings as a grouting material to upper enlarged drillholes that extend to a depth of 20 feet or less. The adjacent states prohibit the use of drilling mud and cuttings as an annular space seal, except that Minnesota allows the addition of drill cuttings to a bentonite grout mix, up to 15% by weight of the mixture.
- *Casing Depth*
  The rule increases the minimum casing depth in limestone or dolomite to 60 feet when the depth to the top of bedrock is less than 20 feet. The new requirements would be more restrictive than every adjacent state except for Minnesota. This change is more protective of groundwater in vulnerable karst geology that is known to occur within Wisconsin. Illinois requires a minimum of

30 or 40 feet of casing in any type of bedrock formation, depending on the depth to the top of bedrock. Iowa requires a minimum of 40 feet of casing in any bedrock formation. Minnesota has no minimum casing depth requirement, but does not allow a well to be developed in certain limestone formations, and requires a minimum of 50 feet of unconsolidated material, sandstone or shale that extends in all directions around the well for a minimum of one mile. Michigan requires a minimum of 25 feet of casing in bedrock, and in an area where a well can be developed only in fractured, jointed, or cavernous bedrock, the casing may only terminate in the formation if there is at least 25 feet of soil above the bedrock.

- *Casing Joining Methods*
  The rule adds non-metallic restrained joints to the list of methods for joining thermoplastic casing. Iowa also allows non-metallic restrained joints by code. The other states allow them by approval or variance only.
- *Grouting Materials*
  The rule allows for additional grouting materials for new wells, including bentonite chips for fractures in bedrock and sand-cement and bentonite-sand mixtures. Adjacent states limit grouting material to neat cement, 20% solids bentonite, or bentonite chips, except for Minnesota, which allows sand-cement and bentonite-sand grouts as well.
- *Filling and Sealing Materials*
  The rule adds bentonite pellets as an allowed filling and sealing material for large and small diameter wells. All adjacent states allow the use of bentonite pellets.
- *Drilling methods*
  The rule creates performance-based standards for the construction of new drilled water supply wells. References to drilling methods have been eliminated to allow for the construction of wells using new drilling equipment and methods. This approach is similar to adjacent states.

e. Treatment for Private Wells
The rule eliminates the current s. NR 812.37 requirement for written DNR approval prior to installing bacteria treatment on a private well and replaces it with a requirement for a well compliance inspection. This reduces regulatory burden for well owners and ensures that improper well construction is not contaminating groundwater or drinking water. Illinois and Iowa do not regulate installation of treatment on nonpublic water supply wells. Michigan does not regulate treatment systems at the state level; some local health departments require prior approval for treatment installation. Minnesota regulates installation of treatment through the plumbing code, and does not require any approval through the well code.

f. Sampling
The rule creates a new section to consolidate existing code requirements for water sampling. The new section specifies sample faucet locations, provides an exception for certain repeat nitrate and arsenic sampling, and establishes laboratory requirements including a requirement that laboratories reject samples for bacteria analysis if the sample has detectable chlorine. Illinois does not require private well sampling. Minnesota specifies sample faucet requirements for non-community wells but not for private wells, and requires laboratories to reject samples for bacteria analysis with detectable chlorine. Michigan does not regulate private well sampling at the state level; local health departments require different sampling based on local water quality concerns.

8. Summary of Factual Data and Analytical Methodologies Used and How Any Related Findings Support the Regulatory Approach Chosen:
Many of the rule revisions simplify, clarify and streamline rule language. Data and methodologies used to support substantive changes include:

- An external advisory group of well drillers was convened to provide input and review draft language for changes to construction standards in NR 812 Subchapter II.
- Well construction report data in DNR records, a random sample of well construction cost proposals in DNR well compensation claim records, and interviews of two other drilling companies were used to collect data and evaluate the impacts of changes to grouting and casing depth requirements.
- Well water test results in DNR records, interviews of four randomly-selected pump installing companies, and interviews of four randomly-selected analytical laboratories distributed around the state were used to collect data and evaluate the impacts of reduced frequency of nitrate and arsenic sampling.

9. Analysis and Supporting Documents Used to Determine the Effect on Small Business or in Preparation of an Economic Impact Report:
The department analyzed cost information in DNR well compensation claim records and from interviews with randomly-selected drilling companies, pump installing companies and analytical laboratories to complete a Fiscal Estimate and Economic Impacts Analysis (EIA) for the rule.

A notice soliciting comments regarding potential economic impacts of the rule was sent to all Wisconsin licensed drillers and pump installers, to the Wisconsin Water Well Association and the Wisconsin Geothermal Association for a 30-day period prior to conducting public hearings on the proposed rule language. The EIA was updated in response to public comments on the EIA and changes in proposed rule language.

10. Effect on Small Business (initial regulatory flexibility analysis):
The majority of businesses impacted by the rule are small businesses. There are approximately 260 drillers and 1240 pump installers doing business in the state. The total economic impact of the proposed rule revision is estimated to be $632,122 per year.

11. Agency Contact Person:
Liesa Lehmann, Bureau of Drinking and Groundwater – DG/5
Department of Natural Resources
101 S. Webster Street
Madison, WI 53707
(608) 267-7649

12. Place where comments are to be submitted and deadline for submission:
A public comment period on the rule started December 17, 2018. The department conducted public hearings in Madison, Eau Claire, Green Bay and Wausau on January 15, 2019. The department accepted comments by regular mail, email and at public hearings. The public comment period ended on January 28, 2019. Refer to the attached "Public Comments and DNR Responses" for a summary of the comments received and the department's response.

SECTION 1. NR 110.15 (6) (d) is amended to read:

NR 110.15 (6) (d) *On-site wells*. Construction of wells for supplying water to a sewage treatment facility shall comply with the requirements of the approval obtained under s. NR ~~812.26 (3)~~812.09 (4) (b).

SECTION 2. NR 146.02 (4r) is repealed and recreated to read:

NR 146.02 (4r) "Property transfer well inspector" has the meaning specified in s. NR 812.07 (79t).

Note: Section NR 812.07 (79t) defines "property transfer well inspector" as an individual authorized under s. NR 812.44 (1) to conduct a property transfer well inspection.

SECTION 3. NR 146.08 (9) is amended to read:

NR 146.08 (9) Before extending any well casing pipe out of a pit, or deepening a well constructed by another individual, the ~~water~~ well driller or the pump installer shall measure the well casing pipe depth to verify that the casing depth complies with the code in effect at the time the well casing was installed. Well details, including location, well casing pipe depth, total well depth, distances to possible contaminant sources and well owner information shall be entered on a form and submitted to the department in accordance with ~~ss. NR 812.22 (10) or 812.41 (4)~~s. NR 812.27 (12).

SECTION 4. NR 146.12 (1r) is repealed and recreated to read:

NR 146.12 (1r) Citations may be issued for violations relating to any of the activities listed in s. NR 812.45 (1).

SECTION 5. NR 507.14 (4) (a) is amended to read:

NR 507.14 (4) (a) If the well is a public or private water supply well, any forms required under ss. NR ~~812.22~~812.10 and 812.26~~, such as well abandonment report form 3300-5~~.

SECTION 6. NR 738.03 (9) (Note) is amended to read:

NR 738.03 (9) **Note:** Section NR 812.07 (119)~~,~~ defines well to ~~mean~~have the meaning specified in s. 281.34 (1) (h), Stats., which defines "well" as ~~"~~any drillhole or other excavation or opening deeper than it is wide that extends more than 10 feet below the ground surface and is constructed for the purpose of obtaining groundwater.~~"~~

SECTION 7. NR 812.03 (4) (Note) is repealed and recreated to read:

NR 812.03 (4) **Note:** Properties that are identified by the department as having residual contamination and continuing obligations can be found by searching the Wisconsin Remediation and Redevelopment Database which is available on the department's website at dnr.wi.gov, search "WRRD."

SECTION 8. NR 812.07 (1d) is repealed.

SECTION 9. NR 812.07 (1r) is created to read:

NR 812.07 (1r) "Alcove" means a pit that shares a wall with a basement and is accessible from the basement.

Note: In prior versions of ch. NR 812, an alcove was also sometimes referred to as a "subsurface pumproom."

SECTION 10. NR 812.07 (10) and (Note) are amended to read:

NR 812.07 (10) "ASTM" or "ASTM International" means the international technical standards organization ~~formerly~~originally known as the American Society for Testing and Materials.

Note: The ~~ASTM or~~ ASTM International headquarters address is 100 Barr Harbor Drive, PO Box C700, West Conshohocken, Pennsylvania 19148-2959.

SECTION 11. NR 812.07 (10m), (13), (19), and (21) are repealed.

SECTION 12. NR 812.07 (22) is amended to read:

NR 812.07 (22) "Clay slurry" means a fluid mixture of water, clean native clay, and drill cuttings or sand ~~having a mud weight of at least 11 pounds per gallon~~.

SECTION 13. NR 812.07 (23), (24) and (27t) are repealed and recreated to read:

NR 812.07 (23) "Clear water" has the meaning specified in s. SPS 381.05 (56).

Note: Section SPS 381.01 (56) defines "clear water" as wastewater other than storm water, having no impurities or where impurities are below a minimum concentration considered harmful by the department, including but not limited to noncontact cooling water and condensate

drainage from refrigeration compressors and air conditioning equipment, drainage of water used for equipment chilling purposes and cooled condensate from steam heating systems or other equipment.

(24) "Community water system" has the meaning specified in s. NR 810.02 (6).

Note: Section NR 810.02 (6) defines "community water system" as a public water system which serves at least 15 service connections used by year-round residents or regularly serves at least 25 year-round residents. Any water system serving 7 or more homes, 10 or more mobile homes, 10 or more apartment units, 10 or more duplex units, or 10 or more condominium units shall be considered a community water system unless information is provided by the owners indicating that 25 year-round residents will not be served.

(27t) "Cross connection" has the meaning specified in s. NR 810.02 (9).

Note: Section NR 810.02 (9) defines "cross connection" as a connection or potential connection between any part of a water supply system and another environment containing substances in a manner that, under any circumstances, would allow the substances to enter the water supply system by means of back siphonage or back pressure.

SECTION 14. NR 812.07 (29m) and (30x) are repealed.

SECTION 15. NR 812.07 (31), (32) and (33) are amended to read:

NR 812.07 (31) "Drawdown" means the extent to which the water level or ~~water pressure~~hydraulic head in and near a well is lowered when water is pumped or flows from the well.

(32) "Drilled well~~s~~" means a well~~s or drillholes~~ constructed by ~~digging,~~ boring, drilling, jetting, driving or similar methods. "Drilled well~~s~~" ~~do not include driven point (sand point) wells unless~~includes a well constructed by driving ~~the point is combined~~ a point in combination with a process to remove material below the 10-foot depth, or by a combination of jetting and driving.

(33) "Drillhole" means an excavation~~,~~ or opening ~~or driven point well~~ deeper than it is wide that extends more than 10 feet below the ground surface constructed for any purpose other than to obtain groundwater.

SECTION 16. NR 812.07 (33) (a), (b) and (c) are repealed.

SECTION 17. NR 812.07 (35) and (Note 1) are amended to read:

NR 812.07 (35) "Driven point well" means a well constructed by joining a drive point with lengths of pipe, and driving the assembly into the ground with percussion equipment or by hand, but without first removing material below the 10-foot depth. "Driven point well" does not include a well constructed by driving a point in combination with a process to remove material below the 10-foot depth or by a combination of jetting and driving.

Note: A "driven point well" is also known as a point well or sand point well.

SECTION 18. NR 812.07 (35) (Note 2) and (35e) are repealed.

SECTION 19. NR 812.07 (36) is created to read:

NR 812.07 (36) "Entry point" has the meaning specified in s. NR 809.04 (29).

Note: Section NR 809.04 (29) defines "entry point" as a location in the public water system after treatment or chemical addition, if any, but prior to the distribution system. A sample collected in the distribution system may be considered an entry point sample if the department has determined it is more representative of the water sources.

SECTION 20. NR 812.07 (38) is repealed and recreated to read:

NR 812.07 (38) "Existing" when referring to an installation, well, water system, reservoir, spring, pit or alcove means an installation, well, water system, reservoir, spring, pit or alcove that was constructed, reconstructed or installed before the effective date of this rule [LRB inserts date].

SECTION 21. NR 812.07 (42) is repealed.

SECTION 22. NR 812.07 (43), (44) and (45) are repealed and recreated to read:

NR 812.07 (43) "Floodfringe" has the meaning specified in s. NR 116.03 (14).

Note: Section NR 116.03 (14) defines "floodfringe" as that portion of the floodplain outside of the floodway, which is covered by flood water during the regional flood. The term "floodfringe" is generally associated with standing water rather than flowing water.

(44) "Floodplain" has the meaning specified in s. NR 116.03 (16).

Note: Section NR 116.03 (16) defines "floodplain" as that land which has been or may be covered by flood water during the regional flood. The floodplain includes the floodway, floodfringe, shallow depth flooding, flood storage and coastal floodplain areas.

(45) "Floodway" has the meaning specified in s. NR 116.03 (22).

Note: Section NR 116.03 (22) defines "floodway" as the channel of a river or stream, and those portions of the floodplain adjoining the channel required to carry the regional flood discharge.

SECTION 23. NR 812.07 (47m) is repealed.

SECTION 24. NR 812.07 (48) is repealed and recreated to read:

NR 812.07 (48) "Grease interceptor" or "grease trap" has the meaning specified in s. NR 113.03 (21).

Note: Section NR 113.03 (21) defines "grease interceptor" as a water tight receptacle designed to intercept and retain grease or fatty substances contained in kitchen and other food wastes. Grease interceptor and grease trap mean the same thing.

SECTION 25. NR 812.07 (49) is amended to read:

NR 812.07 (49) "Groundwater" means any of the waters of the state, as defined in s. 281.01 (18), Stats., occurring in a saturated subsurface geological formation of rock or soil.

SECTION 26. NR 812.07 (49) (Note) is created to read:

NR 812.07 (49) **Note:** Section 281.01 (18), Stats., defines "waters of the state" to include those portions of Lake Michigan and Lake Superior within the boundaries of this state, and all lakes, bays, rivers, streams, springs, ponds, wells, impounding reservoirs, marshes, watercourses, drainage systems and other surface water or groundwater, natural or artificial, public or private, within this state or its jurisdiction.

SECTION 27. NR 812.07 (50) is amended to read:

NR 812.07 (50) "Hazardous waste treatment facility" ~~has the meaning designated~~means "treatment facility" as defined in s. 291.01 (22), Stats.

SECTION 28. NR 812.07 (50) (Note) is created to read:

NR 812.07 (50) **Note:** Section 291.01 (22), Stats., defines "treatment facility" as a facility at which hazardous waste is subjected to treatment and may include a facility where hazardous waste is generated. This term does not include a wastewater treatment facility whose discharges are regulated under ch. 283, Stats., unless the facility is required to be permitted as a hazardous waste treatment facility under the resource conservation and recovery act.

SECTION 29. NR 812.07 (50b) and (50d) are created to read:

NR 812.07 (50b) "Heat exchange driller" means an individual who performs heat exchange drilling.

(50d) "Heat exchange drillhole" has the meaning specified in s. 280.01 (2b), Stats.

Note: Section 280.01 (2b), Stats., defines "heat exchange drillhole" as an excavation or opening in the ground that is deeper than it is wide, that extends more than 25 feet below the ground surface, and that is made for the purpose of installing a geothermal closed–loop heat exchange system.

SECTION 30. NR 812.07 (50e) is repealed and recreated to read:

NR 812.07 (50e) "Heat exchange drilling" has the meaning specified in s. 280.01 (2c), Stats.

Note: Section 280.01 (2c), Stats., defines "heat exchange drilling" as the industry and procedure employed in making heat exchange drillholes.

SECTION 31. NR 812.07 (50m) is repealed.

SECTION 32. NR 812.07 (52) and (54) are repealed and recreated to read:

NR 812.07 (52) "High capacity well" has the meaning specified in s. 281.34 (1) (b), Stats.

Note: Section 281.34 (1) (b), Stats., defines "high capacity well" as a well, except for a residential well or fire protection well, that, together with all other wells on the same property, except for residential wells and fire protection wells, has a capacity of more than 100,000 gallons per day.

(54) "Holding tank" has the meaning specified in s. SPS 381.01 (121).

Note: Section SPS 381.01 (121) defines "holding tank" as a watertight receptacle for the collection and holding of wastewater.

SECTION 33. NR 812.07 (54g), (55), (55e), and (55m) are repealed.

SECTION 34. NR 812.07 (55s) is created to read:

NR 812.07 (55s) "Land disposal system" has the meaning specified in s. NR 140.05 (11).

Note: Section NR 140.05 (11) defines "land disposal system" as a facility for disposing of liquid wastes consisting of: (a) absorption or seepage pond system, (b) ridge and furrow system, (c) spray irrigation system, (d) overland flow system, (e) subsurface field absorption system, (f) land spreading system, or (g) any other land area receiving liquid waste discharges.

SECTION 35. NR 812.07 (56) is amended to read:

NR 812.07 (56) "Landfill" has the meaning specified in ss. NR 500.03 (120) or 660.10 (68)~~means a solid waste disposal site or facility, not classified as a landspreading facility or a surface impoundment facility, where solid waste is disposed on land~~. ~~This term~~"Landfill" includes existing, proposed and abandoned landfills, open dumps, one-time disposal ~~sites~~ landfills as defined in ch. NR ~~502~~503, small and intermediate size construction and demolition waste landfills as defined in ch. NR ~~502~~503, mining waste disposal sites as defined in ch. NR 182 and hazardous waste disposal facilities as defined in chs. NR 660 to 670.

SECTION 36. NR 812.07 (56) (Note) is created to read:

NR 812.07 (56) **Note:** Section NR 500.03 (120) defines "landfill" as a land disposal facility, not classified as a landspreading facility or surface impoundment facility, where solid waste is disposed on land by utilizing the principles of engineering to confine the solid waste to the smallest practical area, to reduce it to the smallest practical volume, and to cover it with a

layer of earth or other approved material as required. Section NR 660.10 (68) defines "landfill" as a disposal facility or part of a facility where hazardous waste is placed in or on land and which is not a pile, a land treatment facility, a surface impoundment, an underground injection well, a salt dome formation, a salt bed formation, an underground mine, a cave or a corrective action management unit.

SECTION 37. NR 812.07 (57) is repealed.

SECTION 38. NR 812.07 (57k) is created to read:

NR 812.07 (57k) "Licensed heat exchange driller" has the meaning specified in s. NR 146.02 (4h).

Note: Section NR 146.02 (4h) defines "licensed heat exchange driller" as an individual who has obtained a license pursuant to s. 280.15 (2m), Stats., and s. NR 146.04, as a heat exchange driller and has paid the annual license fee under s. 280.15 (2m) (c) 1., Stats.

SECTION 39. NR 812.07 (57m), (57s) and (57w) are repealed and recreated to read:

NR 812.07 (57m) "Licensed pump installer" has the meaning specified in s. NR 146.02 (4j).

Note: Section NR 146.02 (4j) defines "licensed pump installer" as any individual who has obtained a license under s. 280.15 (2m), Stats., and s. NR 146.04, as a pump installer and has paid the annual license fee under s. 280.15 (2m) (c) 2., Stats.

(57s) "Licensed water well driller" has the meaning specified in s. NR 146.02 (4k).

Note: Section NR 146.02 (4k) defines "licensed water well driller" as any individual who has obtained a license under s. 280.15 (2m), Stats., and s. NR 146.04, as a water well driller and has paid the annual license fee under s. 280.15 (2m) (c) 1., Stats.

(57w) "Limits of filling" for a landfill has the meaning specified in s. NR 500.03 (127).

Note: Section NR 500.03 (127) defines "limits of filling" as the outermost limit at which waste from a facility has been disposed of, or approved or proposed for disposal.

SECTION 40. NR 812.07 (59) and (60) are repealed.

SECTION 41. NR 812.07 (60e), (60m) and (60s) are created to read:

NR 812.07 (60e) "Living unit" has the meaning specified in s. NR 810.02 (26).

Note: Section NR 810.02 (26) defines "living unit" as a residence, apartment unit, condominium unit, duplex unit, manufactured home or other domicile.

(60m) "Low capacity well" means a well that is not a high capacity well, as defined in sub. (52).

(60s) "Lower drillhole" means that part of a drillhole below the well casing pipe.

SECTION 42. NR 812.07 (62) is repealed and recreated to read:

NR 812.07 (62) "Materials recovery facility" has the meaning specified in s. 287.27(1), Stats.

Note: Section 287.27(1), Stats., defines "materials recovery facility" as a facility where the materials specified in sub. (4) (b) or s. 287.07 (3) or (4), not mixed with other solid waste, are processed for reuse or recycling by conversion into a consumer product or a product which is used as a raw material in a commercial or industrial process. "Materials recovery facility" does not include a facility operated by a pulp or paper mill which utilizes fiber or paper that has been separated from waste for use as a raw material in a commercial product.

SECTION 43. NR 812.07 (63) is repealed.

SECTION 44. NR 812.07 (64) is repealed and recreated to read:

NR 812.07 (64) "Non-community water system" has the meaning specified in s. NR 809.04 (57).

Note: Section NR 809.04 (57) defines "non-community water system" as a public water system that is not a community water system. A non-community water system is either a non-transient non-community water system or a transient non-community water system.

SECTION 45. NR 812.07 (67) and (Note) are amended to read:

NR 812.07 (67) "NSF" or "NSF International" means the public health standards and certification organization formerly known as the National Sanitation Foundation.

Note: The ~~NSF or~~ NSF International headquarters address is PO Box ~~130149~~130140, 789 N. Dixboro Road, Ann Arbor, Michigan 48113-0140.

SECTION 46. NR 812.07 (69m) is created to read:

NR 812.07 (69m) "Packer" means a solid or inflatable seal lowered into a well or drillhole or attached to a casing string to seal off a specific interval within the well or drillhole.

SECTION 47. NR 812.07 (70) and (72m) are repealed.

SECTION 48. NR 812.07 (73) and (75) are amended to read:

NR 812.07 (73) "Pit" means any structure that is completely or partially below the ground surface or below a building floor used for the housing of wells, offset pumps, pressure tanks or valves. ~~Subsurface well or pumprooms, alcoves, adjoining a basement foundation structure~~ Alcoves are pits.

(75) "Potable" or "potable water" means water supplied for human consumption, sanitary use or for the washing or preparation of food or pharmaceutical products.

SECTION 49. NR 812.07 (75c) is repealed.

SECTION 50. NR 812.07 (75L), (75p) and (Note), (75t), and (75x) are repealed and recreated to read:

NR 812.07 (75L) "POWTS component" has the meaning specified in s. SPS 381.01 (183).

Note: Section SPS 381.01 (183) defines "POWTS component" as any subsystem, subassembly or other system designed for use in or as part of a private onsite wastewater treatment system which may include treatment, dispersal or holding and related piping.

(75p) "POWTS dispersal component" has the meaning specified in s. SPS 381.01 (184).

Note: Section SPS 381.01 (184) defines "POWTS dispersal component" as a device or method that is intended to promote the assimilation of treated wastewater by the environment. The terms "absorption field" and "sewage disposal unit" and "POWTS dispersal unit" have been used in previous versions of this rule to describe these types of units.

(75t) “POWTS holding component” has the meaning specified in s. SPS 381.01 (185).

Note: Section SPS 381.01 (185) defines “POWTS holding component" as any receptacle intended to collect wastewater for a period of time, including holding and dosing tanks.

(75x) “POWTS treatment component” has the meaning specified in s. SPS 381.01 (186).

Note: Section SPS 381.01 (186) defines “POWTS treatment component" as a device or method that is intended to reduce the contaminant load of wastewater.

SECTION 51. NR 812.07 (77m) is created to read:

NR 812.07 (77m) “Private onsite wastewater treatment system” has the meaning specified in s. 145.01 (12), Stats.

Note: Section 145.01(12), Stats., defines “private on-site wastewater treatment system” as a sewage treatment and disposal system serving a single structure with a septic tank and soil absorption field located on the same parcel as the structure. This term also means an alternative sewage system approved by the department including a substitute for the septic tank or soil absorption field, a holding tank, a system serving more than one structure or a system located on a different parcel than the structure. A private on-site wastewater treatment system may be owned by the property owner or by a special purpose district.

SECTION 52. NR 812.07 (79) is repealed and recreated to read:

NR 812.07 (79) “Privy” means a pit privy as defined in s. SPS 391.03 (6), or a vault privy as defined in s. SPS 391.03 (9).

Note: Section SPS 391.03 (6) defines “pit privy" as an enclosed nonportable toilet into which nonwater-carried human wastes are deposited to a subsurface storage chamber that is not watertight. Section SPS 391.03 (9) defines “vault privy" as an enclosed nonportable toilet into which nonwater-carried human wastes are deposited to a subsurface storage chamber that is watertight.

SECTION 53. NR 812.07 (79m) and (79t) are amended to read:

NR 812.07 (79m) “Proposed landfill” means a ~~solid waste disposal facility~~ landfill for which actual notice of the intention to develop the facility has been given to the owners of property located within 1,200 feet of the proposed facility or for which a request has been made

under s. 289.22 (1m), Stats., provided that a feasibility report under s. 289.23, Stats., is submitted to the department within 2 years after the applicable notice or request. Proposed landfill does not include a facility the department has determined to be not feasible under s. 289.23, Stats., or a facility for which the department has determined that an approval for the facility is not being pursued with reasonable diligence.

(79t) "Property transfer well inspector" means an individual ~~licensed as a water well driller or pump installer who performs~~ authorized under s. NR 812.44 (1) to conduct a property transfer well inspection~~, completes the form required in s. NR 812.44 (3) and collects the water samples required in s. NR 812.44 (4)~~.

SECTION 54. NR 812.07 (80) (intro.) is renumbered NR 812.07 (80) and amended to read:

NR 812.07 (80) "Public water system" ~~means a system for the provision to the public of piped water for human consumption through pipes or other constructed conveyances if the system has at least 15 service connections or regularly serves an average of at least 25 individuals daily at least 60 days out of the year. A public water system is either a "community water system" or a "non-community water system." A system:~~ has the meaning specified in s. NR 809.04 (67).

SECTION 55. NR 812.07 (80) (a) and (b) are repealed.

SECTION 56. NR 812.07 (80) (Note) is created to read:

NR 812.07 (80) **Note:** Section NR 809.04 (67) defines "public water system" as a system for the provision to the public of piped water for human consumption through pipes or other constructed conveyances, if the system has at least 15 service connections or regularly serves an average of at least 25 individuals daily at least 60 days out of the year. A public water system is either a "community water system" or a "non-community water system." A public water system: (a) includes any collection, treatment, storage and distribution facilities under control of the water supplier for the public water system and used primarily in connection with the system; (b) includes any collection or pretreatment storage facilities not under the control of the water supplier for the public water system, which are used primarily in connection with the system; (c) does not include any "special irrigation district."

SECTION 57. NR 812.07 (81) is repealed and recreated to to read:

NR 812.07 (81) "Pump installer" means an individual who performs pump installing.

SECTION 58. NR 812.07 (85m) is repealed.

SECTION 59. NR 812.07 (86) is repealed and recreated to read:

NR 812.07 (86) "Regional flood" has the meaning specified in s. NR 116.03 (41).

Note: Section NR 116.03 (41) defines "regional flood" as a flood determined to be representative of large floods known to have occurred in Wisconsin or which may be expected to occur on a particular lake, river or stream once in every 100 years.

SECTION 60. NR 812.07 (87) is amended to read:

NR 812.07 (87) "Reservoir" means a ~~facility~~ closed structure for storage of water constructed entirely above or partially below the ground surface, including a constructed tank or manufactured water storage vessel.

SECTION 61. NR 812.07 (88) is repealed.

SECTION 62. NR 812.07 (89), (90), (91) and (94) are repealed and recreated to read:

NR 812.07 (89) "Salvage yard" or "junkyard" means a site or facility used for storing, processing, wrecking, dismantling, demolition, buying or selling of salvageable materials, scrap, automobile bodies or parts. This term does not include litter or debris scattered along or on a roadway, temporary outdoor storage of junk for limited duration, or smaller accumulations of junk on residential lots for personal use.

(90) "Sanitary building drain" has the meaning specified for "building drain, sanitary" in s. SPS 381.01 (41).

Note: Section SPS 381.01 (41) defines "building drain, sanitary" as a building drain which conveys wastewater consisting in part of domestic wastewater.

(91) "Sanitary building sewer" means "building sewer, sanitary" as defined in s. SPS 381.01(45).

Note: Section SPS 381.01 (45) defines "building sewer, sanitary" as a building sewer which conveys wastewater consisting in part of domestic wastewater.

(94) "School" has the meaning specified in 42 USC 300j-21 (6). "School" does not include athletic fields, school forests, environmental centers, home-based schools, and Sunday schools.

Note: 42 USC 300j-21 (6) defines "school" as any elementary school or secondary school as defined in section 7801 of Title 20 and any kindergarten or day care facility.

SECTION 63. NR 812.07 (94b) is created to read:

NR 812.07 (94b) "School well" means a well serving a school.

SECTION 64. NR 812.07 (94r) and (95) are repealed and recreated to read:

NR 812.07 (94r) "Septage" has the meaning specified in s. NR 113.03 (55).

Note: Section NR 113.03 (55) defines "septage" as the wastewater or contents of septic or holding tanks, dosing chambers, grease interceptors, seepage beds, seepage pits, seepage trenches, privies or portable restrooms.

(95) "Septic tank" has the meaning specified in s. NR 113.03 (56).

Note: Section NR 113.03 (56) defines "septic tank" as a tank which receives and partially treats sewage through processes of sedimentation, oxidation, flotation and bacterial action so as to separate solids from the liquid in the sewage and discharges the liquid to a soil absorption system.

SECTION 65. NR 812.07 (96) is repealed.

SECTION 66. NR 812.07 (96g) and (97m) are repealed and recreated to read:

NR 812.07 (96g) "Sludge" has the meaning in s. NR 500.03(212).

Note: Section NR 500.03 (212) defines "sludge" as any solid, semi-solid or liquid waste generated from a municipal, commercial or industrial wastewater treatment plant, water supply treatment plant or air pollution control facility.

(97m) "Solid waste processing facility" has the meaning specified for "processing facility" in s. NR 500.03 (181).

Note: Section NR 500.03 (181) defines "processing facility" as a solid waste facility at which solid waste is baled, shredded, pulverized, composted, classified, separated, combusted or otherwise treated or altered by some means to facilitate further transfer, processing, utilization or disposal. Processing facilities do not include operations conducted by scrap metal, paper, fiber or plastic processors which are excluded from the definition of "solid waste facilities" in this section.

SECTION 67. NR 812.07 (97r) is created to read:

NR 812.07 (97r) "Solid waste storage facility" has the meaning specified for "storage facility" in s. NR 500.03 (224).

Note: Section NR 500.03 (224) defines "storage facility" as a solid waste facility for the storage of solid waste, on a temporary basis in such a manner as not to constitute ultimate disposal of solid waste.

SECTION 68. NR 812.07 (98) is repealed and recreated to read:

NR 812.07 (98) "Solid waste transfer facility" has the meaning specified for "transfer facility" in s. NR 500.03 (238).

Note: Section NR 500.03 (238) defines "transfer facility" as a solid waste facility at which transferring of solid waste from one vehicle or container to another, generally of larger capacity, occurs prior to transporting to the point of processing or disposal.

SECTION 69. NR 812.07 (99) is amended to read:

NR 812.07 (99) "Special well casing ~~pipe~~ depth area" means an area established by the department requiring greater depth of well casing pipe ~~and~~, sampling or other stringent well or drillhole construction methods because of contamination. ~~A list is available from the department.~~

SECTION 70. NR 812.07 (99) (Note) is created to read:

NR 812.07 (99) **Note:** A list of established special well casing depth areas is available on the department's website at dnr.wi.gov.

SECTION 71. NR 812.07 (100), (104) and (105) are repealed.

SECTION 72. NR 812.07 (106) and (111) are amended to read:

NR 812.07 (106) "Storm ~~collector~~ sewer" means a ~~storm sewer that collects storm water, storm waste, clear water wastes or other similar water from 2 or more storm sewer inlets or catch basins~~ buried pipe designed or used for collecting or conveying storm water.

(111) "Top of bedrock" means the top of firm rock~~. The determination of the top of bedrock shall be based on the~~ as determined by a change in the action of the drilling machine ~~and on the~~or a change in the type and size of the drill cuttings. The presence of bedrock shall be indicated when a majority of the drill cuttings consist of either angular rock fragments, as in the case of crystalline bedrock, or rock fragments composed of individual grains or rock particles that are cemented together to form an aggregate, as opposed to single sediment particles, such as in sand.

SECTION 73. NR 812.07 (112) is repealed.

SECTION 74. NR 812.07 (112g), (112k) and (112p) are created to read:

NR 812.07 (112g) "Unconsolidated formation" means geological materials composed of clay, silt, sand, gravel, or cobbles that are not bedrock, and includes alluvium, glacial drift, glacial outwash, glacial till, lacustrine deposits, loess, and saprolite.

(112k) "Upper enlarged drillhole" means a drillhole larger in diameter than the well casing pipe.

(112p) "Valve pit" means a pit that contains only piping and valves. Valve pits do not contain pressure tanks.

SECTION 75. NR 812.07 (112q) and (112v) are amended to read:

NR 812.07 (112q) "Variance" means a department approval to construct or install a water system or a portion of a water system in a manner not in strict compliance with the requirements of this chapter~~, but providing comparable sanitary protection in accordance with conditions specified by the department in its approval~~.

(112v)"Vegetated treatment area," formerly known as "filter strip," means a component of an agricultural waste management system that is an area or strip of herbaceous vegetation

designed and constructed to Natural Resources Conservation Service (NRCS) Standard 635 specifications, located adjacent to an animal barn, animal barn pen, animal shelter, animal yard or a manure storage facility and which is intended to improve water quality by reducing pollutants associated with animal manure and other agricultural wastewater runoff.

SECTION 76. NR 812.07 (112v) (Note) and (113) are repealed.

SECTION 77. NR 812.07 (114) and (116) are amended to read:

NR 812.07 (114) "Walkout basement" means a basement with the floor at ground grade level on at least one side of the structure~~, from which it is possible to walk directly outside without walking upstairs or uphill~~.

(116) "Wastewater treatment plant" has the meaning ~~designated~~specified in ~~ch.NR 114~~s. NR 114.52 (22).

SECTION 78. NR 812.07 (116) (Note) and (116m) are created to read:

NR 812.07 (116) **Note:** Section NR 114.52 (22) defines "wastewater treatment plant" as a facility that provides for the treatment of sanitary or industrial wastewater or both.

(116m) "Wastewater treatment plant well" means a well serving a wastewater treatment plant.

SECTION 79. NR 812.07 (119) is repealed and recreated to read:

NR 812.07 (119) "Well" has the meaning specified in s. 281.34 (1) (h), Stats.

Note: Section 281.34 (1) (h), Stats., defines "well" as any drillhole or other excavation or opening deeper than it is wide that extends more than 10 feet below the ground surface and is constructed for the purpose of obtaining groundwater.

SECTION 80. NR 812.07 (121) is amended to read:

NR 812.07 (121) "Well casing pipe" means pipe meeting standards specified in s. NR ~~812.17 which is driven or set to seal off the vertical zone of contamination~~812.11.

SECTION 81. NR 812.07 (123) is repealed and recreated to to read:

NR 812.07 (123) "Well driller" means an individual who performs well drilling.

SECTION 82. NR 812.07 (124) is amended to read:

NR 812.07 (124) "Well drilling" has the meaning specified in s. 280.01 (8), Stats., and includes any activity ~~which~~that requires the use of a well drilling rig or similar equipment, or any activity-conducted using a well drilling rig or similar equipment with the exception of the driving of points having pipe or casing smaller than three inches in diameter. Well drilling also includes constructing a well or performing any activity ~~which~~that changes the characteristics of a drilled well including constructing, reconstructing or deepening a well, sealing the annular space of a well, joining or welding together lengths of well casing pipe or liner pipe, installation of a liner, installing or replacing a screen, well rehabilitation, hydrofracturing, blasting, and chemical conditioning. Attaching well casing pipe to the upper portion of a well to extend the well out of a pit is not considered well drilling.

SECTION 83. NR 812.07 (124) (Note 2) is repealed.

SECTION 84. NR 812.07 (124m) is amended to read:

NR 812.07 (124m) "Well Notification" means a notice provided ~~by a prospective well owner or well driller~~ to the department in accordance with s. 281.34 (3), Stats.~~, before any new private well is constructed.~~

SECTION 85. NR 812.07 (124m) (Note), (125) and (128) are repealed.

SECTION 86. NR 812.08 (title) and (1) (b), (c), (e) and (f) are amended to read:

NR 812.08 (title) **Water well, ~~heat exchange drillhole,~~ reservoir and spring location.**

(1) (b) So that the well, reservoir or spring is protected from surface water flow and flooding, and located at~~At~~ the highest point on the property consistent with the general layout and surroundings if reasonably possible~~, but in any case protected against surface water flow and flooding~~.

(c) As far away from any known or possible contaminant source ~~of contamination~~ as the general layout of the premises and the surroundings allow.

(e) ~~Every well shall be located so~~So that it is reasonably accessible with proper equipment for cleaning, treatment, repair, testing, inspection, and any other maintenance that may be necessary.

(f) In a manner to meet the additional location and construction specifications of s. NR 812.12 (3)~~, (15), (16), and (17)~~ and (4).

SECTION 87. NR 812.08 (1) (g) and (1m) are created to read:

NR 812.08 (1) (g) Such that the location of a spring meets the requirements under s. NR 812.25.

(1m) GENERAL PROHIBITIONS. No person may locate a well, reservoir, spring, or a contaminant source in a manner that fails to comply with any requirements established in this section.

SECTION 88. NR 812.08 (2) is repealed and recreated to read:

NR 812.08 (2) RELATION TO BUILDINGS. In relation to buildings, all of the following apply to the location of any potable or nonpotable well:

(a) No well may be located directly in line with a rainwater downspout outlet or other clear water discharge.

(b) When a structure is built over a drilled well, the structure shall have an easily removable access hatch, or provide other practicable access to allow for pulling and servicing the pump. The well casing pipe shall extend at least 12 inches above the ground-grade or above the ground-grade floor of the building and shall be sealed watertight at the point where it extends through the floor.

(c) No well may be located, nor a building constructed, such that the well casing pipe will terminate in a basement or extend through the basement of any building or terminate under the floor of a building having no basement. A well may not terminate in or extend through a crawl space.

(d) The top of a well casing pipe may terminate in a walkout basement if all of the following conditions are met:

1. It is possible to walk directly outside from the walkout basement without walking upstairs or upslope.

2. The surface of the ground around the outside exit door of the walkout basement slopes down away from the door.

3. The well and pump installation are accessible for repair and removal.

4. The well produces water free from contaminant levels in excess of the standards specified in s. NR 812.06.

5. The well casing pipe depth meets the requirements of s. NR 812.17.

6. The well and pump installation are in compliance with all other requirements of this chapter.

7. The walkout basement is not subject to flooding.

8. The walkout basement is not in a floodway or floodplain.

(e) A well may not terminate in or extend through a crawl space having a below grade depression or excavation.

(f) If a well must be located in a driveway, parking area, walkway, or other high traffic area due to lot size or to meet minimum required separation distances between the well and contaminant sources, the well may be contained within a driveway ramp structure without department approval providing the driveway ramp meets the specifications of s. NR 812.36. A driveway ramp may not be constructed or located in a floodway or floodplain.

(g) A yard hydrant may not be installed within or on a well.

SECTION 89. NR 812.08 (3) (a) and (c) are amended to read:

NR 812.08 (3) (a) A ~~potable or nonpotable~~ well may be constructed, reconstructed or replaced in a floodfringe provided that the top of the well is terminated at least 2 feet above the regional flood elevation for the well site. The regional flood elevation is determined by the city, village, or county floodplain zoning ordinance.

(c) A new well may not be constructed ~~on~~in a floodway ~~property that is either undeveloped or has building structures but no existing well~~unless allowed by s. NR 116.12 (1) (f) and city, village, or county ordinance.

SECTION 90. NR 812.08 (3) (d) is repealed.

SECTION 91. NR 812.08 (4) and Table A are repealed and recreated to read:

NR 812.08 (4) RELATION TO CONTAMINANT SOURCES. A well driller or well constructor may not construct or reconstruct a well, install a reservoir, or develop a spring less than the minimum separation distance from a possible contaminant source as specified in Table A. The minimum separation distances of this subsection do not apply to dewatering wells approved under s. NR 812.09 (4) (a). Greater separation distances may be required for wells requiring plan approval under s. NR 812.09. Separation distance requirements to possible contaminant sources may not be waived because of property lines. Separation distances shall be measured from the edge of the well, reservoir or spring, to the nearest edge of the contaminant source or as specified in Table A.

TABLE A
MINIMUM SEPARATION DISTANCE REQUIREMENTS BETWEEN POTABLE OR NONPOTABLE WELLS, RESERVOIRS, SPRINGS AND POSSIBLE CONTAMINANT SOURCES

Source	Distance in Feet
Animal Barn or Animal Barn Pen (measured to the nearest outside edge of the building or structure)	50
Animal Shelter (not including pet shelter or pet kennel housing 5 or fewer pets)	50
Animal Yard—Includes Calf Hutch (not including pet shelter or pet kennel housing 5 or fewer pets)	50
Cemetery Grave Sites	50
Cistern	8
Coal Storage (greater than 500 tons)	1,200
Culvert, stormwater	8
Ditch-Edge of	8
Drain-Sanitary building	8
Drillhole used for the underground placement of any waste, surface water, or any substance as defined in s. 160.01 (8), Stats.	100
Fertilizer or Pesticide Storage Tank (any size, surface or buried) (Nonpotable wells)	8
Fertilizer or Pesticide Storage Tank (any size, surface or buried) (Potable wells)	100
Fuel Oil Tank >1,500 gallons on surface or any size buried (including associated buried piping)	100
Fuel Oil Tank ≤ 1,500 gallons on surface or any size buried if serving single family residence (including associated piping)	25
Fertilizer or Pesticide (Dry) Storage Structure (storing more than 100 pounds in bags or bulk)	100
Gasoline or Other Petroleum or Liquid Product Tank — Buried (Does not apply to separation distance between Liquid Propane tanks and wells serving single family residence) (Including any associated piping)	100
Gasoline or Other Petroleum or Liquid Product Tank — Surface (< 1,500 gallons, including any associated buried piping	25
Gasoline or Other Petroleum or Liquid Product Tank — Surface (≥1,500 gallons, including any associated piping)	100
Glass Lined Feed Storage Facility (harvester-type silos)	50
Grease Interceptor (buried trap)	25
Heat Exchange Drillhole	10
Hazardous Waste Treatment Facility regulated by the department	1,200
Landfill (active, proposed or closed) (distance is measured to nearest fill area of closed landfill, if known; otherwise the distance is measured to the property line)	1,200
Lift Station (does not apply to residential lift stations, see Sanitary Building Sewer)	100
Liquid Propane (L.P.) gas tank (buried) and associated buried gas lines serving a single family residence	8
Liquid Waste Disposal System	250
Manure Hopper or Reception Tank—Liquid-Tight [1]	50
Manure Loading Area	50
Manure Stack-Temporary	150

Manure Storage Structure - earthen, excavated or non-liquid tight	250
Manure Storage Structure - fabricated, liquid-tight	100
Materials recovery facility that requires self-certification under NR 500 series	100
Milk house drain outlet	50
Nonpotable Well	8
Pet Waste Pit Disposal Unit	50
Pet animal shelter or kennel housing not more than 5 pets	8
Pet animal shelter or kennel housing more than 5 pets	50
Pit or alcove—Noncomplying	8
POWTS holding component (also known as a Holding Tank (Wastewater))	25
POWTS treatment component (Includes septic tanks, aerobic treatment units or filters)	25
POWTS dispersal component (also known as Soil Absorption Unit or Mound) < 12,000 gal/day (except for school wells) [2]	50
POWTS dispersal component (also known as Soil Absorption Unit or Mound) < 12,000 gal/day (school wells) [2]	200
POWTS dispersal component (also known as Soil Absorption Unit or Mound) ≥ 12,000 gal/day [2]	250
Privy – pit privy (not watertight)	50
Privy – vault privy (watertight)	25
Quarry [3]	500
Reservoir—Noncomplying	8
Salt or Deicing Material Storage Area, iIncluding structure and area surrounding where material is transferred to vehicles[4]	250
Salvage yard or junkyard	250
Scrap Metal Processing Facility	100
SEWERS (Buried)	
—Manure Sewer	25
—Manure Sewer (> 6 inches in diameter)	50
—Sanitary Building Sewer	8
—Storm Sewer	8
—Sanitary Collector Sewer	25
Shoreline—Lake or Pond (measured to the regional high-water elevation), River or Stream (measured to the edge of the floodway)[5]	25
Silage Storage, Earthen Trench or Pit	250
Silage Storage Structure (Fabricated liquid-tight) (In-ground or surface)	100
Silage Storage—Surface, Uncovered	100
Silage Storage in a Transfer Tube (Plastic)	50
Silo (Not including dry grain storage structures)	50
Single application landspreading of petroleum-contaminated soil	250
Sludge Drying Bed, Liquid-tight	100
Sludge Drying Bed, Not Liquid-tight	250
Solid waste processing facility (including incinerators, air curtain destructors, woodburning facilities, composting facilities, and municipal solid waste combustors), solid waste storage facility or solid waste transfer facility that requires a license or approval under NR 500 series	250
Stormwater Detention Basin (measured to the edge)	25
Stormwater Infiltration basin or system, single- or two-family residential location, includes rain gardens, infiltration trenches and similar structures	8
Stormwater Infiltration basin or system, commercial, multifamily residential (> 2 family units) or industrial	100
Sump—Wastewater (watertight)	8
Sump—Wastewater (not watertight)	25
Swimming Pool (above or below ground) (measured from edge of water)	8
Vegetated Treatment Area (previously known as a filter strip)	50
Wastewater Treatment Plant Effluent Pipe	50
Wastewater Treatment Plant Structure, Conveyance or Treatment Unit	100

1) Separation distances to manure and manure containment structures are also defined in Natural Resource Conservation (NRCS) technical standards and chs. NR 151, 243 and 812. The separation distances in each may be different. When installing a well on a farm, especially an AFO (animal feeding operation) consult with the owner, the technical standards, and all applicable administrative code to identify other well separation distances that may exist.

2) The separation distance from a POWTS dispersal component does not apply if the component has been abandoned in accordance with s. SPS 383.33.

3) See s. NR 812.12 (4) for well construction requirements for wells to be constructed within 500 feet of a quarry.
4) This category includes sand and salt mixtures if salt content of mixture is 5% or more.
5) The separation distance requirements for pond shorelines do not apply to synthetically lined decorative yard ponds located on residential lots.

SECTION 92. NR 812.09 (1), (2), (3), and (4) (intro.), (a), and 1., 2., 4., and 5. are amended to read:

NR 812.09 **Department approvals.** (1) REVIEW PERIOD. Unless another time period is specified by law, the department shall complete its review and make a determination on all applications for licenses or approvals within 65 business days after receipt of a complete application. Incomplete applications will be returned. The start of the 65 day review period will not begin until a complete application is received by the department. All requests for approval shall be in writing, except ~~that~~ for situations that require an immediate response, in which case an approval may be requested verbally and ~~an advanced~~a verbal approval may be granted by the department ~~and~~to be followed up with a written confirmation.

(2) APPROVAL APPLICATION AND SUBMISSION. The property owner or lessee shall obtain a written approval from the department. When an application is submitted by someone other than the owner of the subject property, the owner or authorized agent shall sign the application. Application information, outlines or forms may be obtained from the department. Applications shall provide information regarding the ~~owner's and operator's~~ name, address and firm name of both the owner and operator, if applicable, and any other information requested by the department~~. The department may request, but is not limited to~~, including descriptions or sketches of well construction, geology, pump installation, plumbing, possible contamination sources, property boundary, water use and~~,~~ water sample results, depending on the type of application.

(3) PLANS AND SPECIFICATION PREPARATION. Plans and specifications for a school water system or wastewater treatment plant water system shall be submitted by a registered professional engineer or licensed water well driller for wells, and by a registered professional engineer or licensed pump installer for pumps, discharge piping, storage tanks and controls. ~~Plans and specifications for a wastewater treatment plant water system shall be submitted by a registered professional engineer, by a well driller for the well or a pump installer for the pump. If construction or installation of a water system described in this section has not commenced within 2 years of approval date, the approval is void.~~

(4) APPROVALS REQUIRED. Prior department approval is required for the activities described in this subsection. When deemed necessary and appropriate for the protection of public safety, safe drinking water and the groundwater resource, the department may specify more stringent well and heat exchange drillhole locations, well and heat exchange drillhole construction or pump installation specifications for existing and proposed high capacity, school or wastewater treatment plant water systems and other activities requiring approval by this subsection ~~or water systems approved by variance~~. Approval by the department does not relieve any person of any liability ~~which~~ that may result from injury or damage suffered by any other person. In addition, failure to comply with any condition of an approval or the construction, reconstruction or operation of any well or water system in violation of any statute, rule or department order shall void the approval. Approval is required for all of the following:

(a) The construction, reconstruction, or operation of a high capacity well or high capacity well system, including dewatering wells, school wells, and wastewater treatment plant wells, except those actions specified in s. 281.34 (2g), Stats. An application for a high capacity well or high capacity well system approval shall include, for every well, the location, construction or reconstruction features, pump installation features, the proposed rate of operation and the distance to nearby public utility wells, as defined in s. 196.01, Stats. A high capacity well or high capacity well system approval is subject to all of the following:

1. The department may deny approval, grant a limited approval or modify an approval under which the location, depth, pumping capacity or rate of flow and ultimate use is restricted so that the supply of water for any public utility, as defined by s. 196.01, Stats., will not be impaired. Reduced availability of groundwater to a public utility well may be indicated when ~~calculations~~ calculated drawdown, using estimated values for aquifer characteristics ~~result in 10 or more feet of water level drawdown in the public utility well,~~ results in a reduction of 10% or greater in the public water utility's saturated thickness based on ~~30 days of continuous~~ pumping from the proposed high capacity well or well system. The department may also deny approval or condition an approval if the proposed or actual well location, water quality, well construction or pump installation features or the use of the well does not meet, at the time of application, the specifications of this chapter for new well construction and pump installation or water use.

2. When an owner ~~or operator relinquishes control of the operation of~~ transfers the land on which a high capacity well or high capacity well system~~, a new approval shall be obtained by~~

~~the new operator, owner or lessee before operation of the high capacity well or well system is continued~~is located, the owner shall provide notice to the department as specified in s. 281.34 (2g) (c), Stats.

4. Emergency approval for a high capacity well or high capacity well system may be granted when fire hazard, imminent crop damage or other similar emergency requires expedited approval, if the owner submits the request in writing with a justification of the emergency, and if the department determines that the high capacity well or high capacity well system ~~proposed will not adversely affect or reduce the availability of water to a public utility, as defined in s. 196.01~~meets the requirements of s. 281.34 (5), Stats.

5. High capacity test drillholes or up to 2 geothermal heat exchange drillholes may be constructed without approval to test for aquifer yield to determine if a high capacity well, heat exchange drillhole~~,~~ or high capacity well system is feasible. The well casing pipe for such test drillholes shall not exceed 6-~~inch~~ inches in diameter unless the well driller notifies the department. High capacity test drillholes may not be converted to permanent high capacity wells unless approved by the department prior to construction. High capacity test drillholes may be test pumped at a rate of 70 gallons per minute or more without department notification or approval under this section if the test does not last more than a total of 72 hours. After testing, the drillhole shall be filled and sealed~~,~~ according to the requirements of s. NR 812.26 or shall be converted, within 90 days following approval, to a high capacity well, heat exchange drillhole~~,~~ or high capacity well system ~~which~~ that meets the requirements of this chapter or ch. NR 811 and of any approved plans and specifications ~~within 90 days~~.

SECTION 93. NR 812.09 (4) (a) 6. is created to read:

NR 812.09 (4) (a) 6. The department may allow a high capacity well with a pumping capacity less than 70 gallons per minute to be constructed and to be installed with a pump according to low capacity standards if aquifer characteristics warrant less stringent construction requirements.

SECTION 94. NR 812.09 (4) (b) and (d) are amended to read:

NR 812.09 (4) (b) The construction~~,~~ or reconstruction ~~or operation~~ of a low capacity school well or low capacity wastewater treatment plant well ~~or water system~~.

(d) A variance under s. NR 812.43 from any provision of this chapter.

SECTION 95. NR 812.09 (4) (e) is repealed.

SECTION 96. NR 812.09 (4) (f) and (Note) are amended to read:

NR 812.09 (4) (f) The construction or reconstruction of a well located in designated special well casing ~~pipe~~ depth areas.

Note: A list of ~~these~~established special well casing ~~pipe~~ depth areas is available ~~from~~on the ~~department~~ department's website at dnr.wi.gov.

SECTION 97. NR 812.09 (4) (g), (h) (k), (L) (n), (o), (r), and (t) are repealed.

SECTION 98. NR 812.09 (4) (u) is created to read:

NR 812.09 (4) (u) The reconstruction of a well that does not comply with the location requirements of s. NR 812.08 or the construction requirements of subch. II, except those actions specified in s. 281.34 (2g), Stats.

SECTION 99. NR 812.09 (4) (v) is amended to read:

NR 812.09 (4) (v) The use of a nonpressure storage vessel other than a surge tank as part of a potable water supply.

SECTION 100. NR 812.09 (4) (w) is repealed and recreated to read:

NR 812.09 (4) (w) The construction, reconstruction, or replacement of a well or heat exchange drillhole on a property identified by the department as having residual contamination and continuing obligations under s. 292.12, Stats., except those actions specified in s. 281.34 (2g), Stats.

Note: Properties that are identified by the department as having residual contamination and continuing obligations can be found by searching the Wisconsin Remediation and Redevelopment Database which is available on the department's website at dnr.wi.gov, search "WRRD."

SECTION 101. NR 812.09 (4) (z) (Note 1) and (Note 2) are repealed.

SECTION 102. NR 812.09 (4g) and (4r) are created to read:

NR 812.09 (4g) ADVANCE NOTIFICATION. The property owner or authorized agent shall notify the department at least one working day prior to starting construction under any approval issued under this section. Notification shall be made in a manner specified by the department in the approval.

(4r) APPROVAL EXPIRATION. If an approval is issued under this section, but construction or installation for which the approval was required has not commenced within 2 years of the approval date, the approval is void.

SECTION 103. NR 812.09 (5) is amended to read:

NR 812.09 (5) APPROVAL VERIFICATION. A well or heat exchange driller, well constructor, pump installer or contractor shall obtain a copy of the approval for any activity identified in sub. (4) prior to the initiation of any work on a well, heat exchange drillhole, pump installation or water system, and shall have a copy of the approval available on-site during construction or installation. When ~~necessary and appropriate~~ the department ~~may grant~~grants a verbal approval ~~to a~~, the well or heat exchange driller, pump installer or contractor ~~to~~may initiate an activity before obtaining a written ~~copy of the approval~~confirmation, provided that person complies with the conditions of the approval ~~are complied with~~.

SECTION 104. NR 812.09 (7) and (8) are created to read:

NR 812.09 (7) APPROVAL MODIFICATION. If circumstances require modification of the original proposed project after the department grants an approval under this section, including modified location, drilling method, drilling depth, change in well casing depth, or number of heat exchange drillholes, the property owner or authorized agent shall obtain written approval of the modified plans from the department prior to starting construction.

(8) DENIAL OF OPERATION. The department may deny or rescind approval for operation of an existing well requiring approval under sub. (4) if the well does not meet the construction requirements of subch. II.

SECTION 105. NR 812.091 is created to read:

NR 812.091 **Product and component approvals.** (1) USE OF PRODUCT OR COMPONENT. No person may use a product or component for work conducted under this chapter that does not meet the requirements of this section.

(2) APPLICABILITY. The following products or components used for work conducted under this chapter shall meet the standards specified in sub. (3) or be authorized under an approval issued by the department under sub. (4) prior to use:

(a) Drilling aids and additives.

(b) Grout and sealing materials.

(c) Filling and sealing materials.

(d) Well rehabilitation materials.

(e) Chemicals placed in a well or drillhole.

(f) Well head components including well caps and well seals.

(g) Pitless adapters, pitless units, above ground discharge units, and any treatment equipment to be installed directly in or on a well.

(3) NO PRIOR APPROVAL REQUIRED. The following products or components may be used for work conducted under this chapter without prior department approval, provided the manufacturer's instructions are consistent with all of the following requirements:

(a) Drinking water treatment chemicals, including miscellaneous water supply products, that are certified for compliance with NSF/ANSI Standard 60, provided all of the following additional requirements are met:

1. The manufacturer submits a copy of the NSF certification to the department.

2. The instructions for use on the product container are consistent with the conditions of the certification.

3. The product is not intended to be left in the water system longer than 48 hours.

4. The manufacturer notifies the department if the certification is updated or rescinded.

(b) Drinking water system components in contact with potable water that are certified for compliance with NSF/ANSI Standard 61.

(c) Water treatment devices installed in a water system that have a plumbing product approval in accordance with chs. SPS 382 and 384.

(4) DEPARTMENT APPROVAL REQUIRED. If a product or component does not meet the requirements under par. (3), a manufacturer is required to obtain the department's approval of the product or component before a well driller, heat exchange driller or pump installer may use the product or component for work conducted under this chapter.

(5) APPLICATION FOR APPROVAL. For any product or component not authorized under sub. (3), the manufacturer shall apply for and obtain a written approval from the department. The manufacturer shall apply on a form or in a manner specified by the department. Applications shall include information regarding the manufacturer's name, address, and contact person for the product or component, and a description of the product or component and the manufacturer's instructions. The department may request all information necessary to evaluate the chemical makeup and impacts to drinking water, groundwater and public health and safety.

(6) CRITERIA FOR DEPARTMENT APPROVAL. The department shall ensure the protection of public safety, safe drinking water, and groundwater in review and approval of each application submitted under sub. (5). When deemed necessary and appropriate for the protection of public safety, safe drinking water, and the groundwater resource, the department may impose more stringent conditions on the use of a product or component than the manufacturer's instructions. In addition, the department shall apply the following criteria:

(a) Well construction materials, including drill bits, tremie pipe, well casing pipe, shoes, screens, gravel packs, grouting and sealing materials, and drilling aids, shall meet the requirements specified in s. NR 812.11.

(b) Pump installation materials, including supply pipe, well caps and seals, pitless adapters and pitless units, pumps, water storage vessels, sample faucets, and yard hydrants, shall meet the requirements specified in subch. III.

(c) Well caps and seals shall be weather- and vermin-proof compression type components. Department approvals for well caps and seals shall also be based on materials of construction, method of venting, effectiveness of gasket, ease of removal for inspection of the inside of the well, and method of attachment to the well casing pipe. Nuts and bolts shall be made of materials that minimize corrosion.

(d) Department approval of pitless adapters and pitless units shall be based on materials of construction, thickness of pipe or tubing, thickness of other component parts, method of fabrication, method of connection, and the integrity of the seal to the well casing pipe. The

department may require additional standards and tests, including minimum pressure test performance, that the department deems necessary to demonstrate the sanitary integrity of any adapter or unit submitted for department approval.

(7) LIST OF APPROVED PRODUCTS AND COMPONENTS. The department shall maintain lists of all products and components approved under this section.

Note: Lists of approved products and components are available on the department's website at https://dnr.wi.gov/topic/Wells/drillerPumpInstall.html.

(8) PROHIBITION. The department may prohibit the use of any product or component if the department finds there is substantial evidence that the product poses a significant hazard to safe drinking water or groundwater. The department shall state its decision and conclusions in writing to the manufacturer, and notify industry representatives including the Wisconsin Water Well Association and the Wisconsin Pump and Well Suppliers Association. The department's decision shall specify the effective date of the prohibition, not to exceed 12 months after the date of the decision.

(9) CERTIFICATION. If a product or component is certified for compliance with the applicable NSF/ANSI standard and meets the requirements specified in sub. (3) after department approval is granted under sub. (4), the approval shall no longer be required.

(10) MODIFICATION. If a product or component is modified after approval is granted under this section, including a change in materials, chemical makeup, or intended use, the approval is void and the manufacturer shall submit a new request for approval from the department.

(11) LIABILITY. Approval by the department does not relieve any person of any liability that may result from injury or damage suffered by any other person due to sale or use of an approved product or component. In addition, failure to comply with any condition of a department approval shall void the approval.

Note: Copies of NSF/ANSI Standards 60 and 61 may be obtained directly from NSF's website at http://www.nsf.org/regulatory/regulator-nsf-standards. Copies are also on file at the offices of the department and the legislative reference bureau.

SECTION 106. NR 812 Subchapter II is repealed and recreated to read:

SUBCHAPTER II

NEW WATER WELL AND HEAT EXCHANGE DRILLHOLE CONSTRUCTION AND RECONSTRUCTION AND FILLING AND SEALING OF WELLS AND DRILLHOLES

NR 812.10 Well driller and well constructor requirements. A well driller or well constructor is responsible for constructing a well according to all of the following requirements:

(1) LICENSE REQUIREMENT. An individual who constructs a well shall be a licensed water well driller except that a license is not required for any of the following individuals provided all other requirements of this subchapter are met:

(a) An individual performing well drilling on real estate owned or leased by that individual.

(b) An individual employed by a licensed water well driller or a person registered as a business to perform well drilling.

(c) An individual constructing a driven point well as defined in s. NR 812.07 (35).

(d) An individual constructing a nonpotable water supply well.

(2) WELL OR DRILLHOLE LOCATION. A well driller or well constructor shall be responsible for properly locating a well. Wells shall be located to meet the minimum requirements specified in s. NR 812.08.

(3) EQUIPMENT AND MATERIALS. A well driller or well constructor shall use the proper equipment and materials to enable compliance with the requirements of this subchapter.

(4) CONSTRUCTION METHODS. A well driller or well constructor shall comply with this chapter for the construction and reconstruction of all wells. A well driller or well constructor shall provide adequate protection for the top of the drillhole and the top of the well casing pipe to prevent surface contamination from entering the well during the drilling operation and when the driller is not at the drilling site.

(5) APPROVALS. A well driller or well constructor shall either obtain, or verify that the well owner has obtained, a department issued approval before the well construction operation is started on any well that requires an approval under s. NR 812.09 (4). A well driller or well constructor shall comply with any requirements of an approval issued by the department under s. NR 812.09 (4).

(6) CONSULTATION WITH THE DEPARTMENT PRIOR TO DRILLING. A well driller or well constructor shall consult with the department prior to drilling in areas where the driller has been

notified or determines that there are contaminated formations or groundwater contamination levels in excess of the standards specified in s. NR 812.06, or prior to drilling a well on a property identified by the department as having residual contamination and continuing obligations requiring listing on the department's database under s. 292.12 (3), Stats.

Note: Properties that are identified by the department as having residual contamination and continuing obligations can be found by searching the Wisconsin Remediation and Redevelopment Database which is available on the department's website at dnr.wi.gov, search "WRRD."

(7) NONCOMPLYING WELLS. When a well driller or well constructor has constructed a water well not initially located or constructed in compliance with this chapter, the well driller or well constructor shall pay all costs for bringing the well into compliance with this chapter. These costs include the cost of filling and sealing the noncomplying well, if necessary, but do not include the costs that would have been charged for an initial complying well construction.

(8) WELL NOTIFICATION REPORT VERIFICATION. A well driller or well constructor shall either obtain a well notification or verify that the well owner has obtained a department well notification including the notification number, by obtaining a copy of the notification report, before the well construction operation is started.

(9) PERMIT VERIFICATION. A well driller, well constructor, or drilling contractor shall obtain required permits from counties authorized to administer this chapter under ch. NR 845. If the property is located within the area served by a municipally owned water system, the well driller or well constructor shall verify that the well owner has obtained a well operational permit from the municipality in accordance with the municipality's private well ordinance.

(10) WATER SAMPLE COLLECTION, ANALYSIS AND REPORTING. The well driller or the well constructor shall collect water samples, submit them to a certified laboratory for analysis, and provide the test results in compliance with s. NR 812.46.

(11) WELL CONSTRUCTION REPORT.

(a) The well driller or well constructor shall submit a well construction report, on a form prescribed by the department, within 30 days following the date of completion of any of the following activities:

1. Well construction.

2. Well reconstruction.

3. The construction of a dry drillhole or unsuccessful well that is not immediately filled and sealed.

4. Driving or replacing a driven well point.

5. Well screen replacement if the screen is set more than 5 feet above or below the original screen depth setting.

(b) The well driller or well constructor shall submit a complete and accurate well construction report to the department and to the well owner. The well driller or well constructor shall submit the well construction report to the department electronically beginning on January 1, 2023.

(c) When constructing a replacement well, a well driller or well constructor shall report any well he or she removes from service on the property.

(d) If the department returns a well construction report to the well driller or well constructor because the well construction report is not complete or because compliance with the construction requirements of this chapter is not clear, the well driller or well constructor shall resubmit the original well construction report to the department with corrections and completion no later than 15 days after receipt of the returned report.

(12) BACTERIA POSITIVE WELLS. A well driller or well constructor shall return to the well site to diagnose and attempt to correct a problem when an initial sample from a potable well is positive for total coliform bacteria. Corrective action shall begin no later than 10 days after a well driller or well constructor is informed of a total coliform bacteria-positive result or prior to the well being placed into service, whichever is later. After corrective action, the well shall be disinfected and flushed in accordance with s. NR 812.12 (17) and sampled in accordance with s. NR 812.46 (1).

(13) PROBLEM WELLS. (a) A well driller or well constructor shall return to the well site to attempt to diagnose and correct problems if a problem is reported to them, no later than 90 days after a well is completed or no later than 30 days after the well is placed in service, whichever is later. The well driller or well constructor shall return to the well site to attempt to diagnose and correct problems when any of the following occurs:

1. The well produces sandy or turbid water.

2. The well fails due to a caving or sloughing formation.

3. Water starts flowing up the outside of the casing of a flowing well.

(b) If a well driller or well constructor installs a liner to correct problems identified under this subsection, the liner shall meet the requirements specified in s. NR 812.21.

(c) A well driller or well constructor may seal a drillhole with neat cement, sand cement grout, or concrete grout and subsequently drill through the hardened grout to reconstruct a well for non-health-related water quality problems or for turbidity problems. A well driller or well constructor shall report any well reconstructed in this manner in accordance with the requirements specified in sub. (15).

(14) NOTIFICATION OF THE NEED TO FILL AND SEAL A WELL. A well driller or well constructor who removes a well from service or constructs a replacement well on a property shall inform the property owner that the department requires that any well replaced or removed from service shall be filled and sealed according to the requirements of this section no later than 90 days after the well was removed from service or 90 days after the completion of the replacement well, whichever is later.

(15) WELL CASING PIPE DEPTH VERIFICATION REPORT. (a) When required to measure well casing pipe depth by this chapter or at the request of the department, the well driller or well constructor shall enter the well details on a form specified by the department and submit the form to the well owner and the department no later than 30 days after performing the verification.

(b) All of the following information shall be included on the form:

1. The well location.

2. The well owner information.

3. The casing material.

4. The casing diameter.

5. The well casing pipe depth.

6. The total well depth.

7. The depth to water.

8. The distances to possible contaminant sources.

(16) DISINFECTION OF EQUIPMENT. A well driller or well constructor shall disinfect any equipment used to measure or diagnose a problem in a well prior to placing the equipment in a well.

NR 812.11 Well construction equipment and materials. All materials permanently installed in a well by a well driller or well constructor shall be new, unused, and approved under s. NR 812.091. A well driller or well constructor shall use equipment and materials that meet all of the following requirements:

(1) DRILL BITS. The diameter of a drill bit shall be within 1/4 inch of the diameter of any drillhole to be constructed.

(2) TREMIE PIPES. Tremie pipe used for the placement of grouting or sealing material shall be one of the following:

(a) Metal pipe.

(b) Rubber-covered hose reinforced with braided fiber or steel and rated for at least 300 psi.

(c) Thermoplastic pipe rated for at least 160 psi including:

1. Polyvinyl chloride (PVC).

2. Chlorinated polyvinyl chloride (CPVC).

3. Polyethylene (PE).

4. Polybutylene (PB).

5. Acrylonitrile butadiene styrene (ABS).

(3) MUD BALANCES. A well driller or well constructor shall use a mud balance to measure the density of grouting or sealing materials to meet the requirements of this section.

(4) LEAD PROHIBITED. A well driller or well constructor is prohibited from the use of lead compounds or lead components to lubricate and seal drill stem joints or any equipment that enters a well. All material permanently installed in a well by a well driller or well constructor must be lead-free as defined by the Safe Drinking Water Act.

Note: The Safe Drinking Water Act defines "lead-free" as a weighted average of 0.25% lead calculated across the wetted surfaces of a pipe, pipe fitting, plumbing fitting, and fixture and 0.2% lead for solder and flux.

(5) DIAMETER UNIFORMITY. Within any string of well casing pipe, all lengths of pipe used shall be of the same diameter.

(6) STEEL WELL CASING PIPE. Steel well casing pipe and liner pipe shall be new, unused, and nonreclaimed pipe. The pipe shall meet ASTM or API standards and shall also meet all of the following requirements:

(a) *Specifications*. Except as provided in par. (b), well casing pipe shall have the dimensions and weights specified in Table B. Well casing pipe used in initial well construction or liner pipe used for reconstruction of a well with water containing contaminant levels in excess of the standards specified in s. NR 812.06 shall be new steel pipe meeting any of the following standards:

1. ASTM A 53.

2. ASTM A 106.

3. ASTM A 589—Type I, Grade A or B—Type II, Grade A, Type III—driven well pipe.

4. API 5L.

(b) *Nonpotable well pipe exception*. Pipe for nonpotable wells greater than 12-inch diameter shall have a minimum wall thickness of at least 0.250 inches and be able to withstand the structural stress imposed by construction conditions.

(c) *Defective pipe*. Defective pipe may not be used in water well construction. The well driller or well constructor shall inspect steel well casing pipe for defects prior to use. Defective pipe includes all of the following:

1. Pipe with girth welded joints.

2. Pipe with welded patches.

3. Pipe not conforming to the marking requirements specified in par. (d).

4. Pipe with defects, such as cracks, open welds, partial or incomplete welds, open seams, laminations in pipe wall that exceed 12-1/2% of wall thickness, or slivers that exceed 12-1/2% of wall thickness.

5. Pipe with coatings containing contaminants on the inside of the pipe.

6. Pipe with heavy coatings of paint on the outside of the pipe.

7. Any length of pipe composed of multiple pieces that is not straight and squarely aligned, or is incorrectly mated and welded in accordance with the requirements specified in par. (f).

(d) *Marking requirements*. Each length of well casing pipe 2 inches or larger in diameter shall meet the requirements in Table B and shall be legibly marked in conformance with the ASTM or API marking specifications including color identification in the form of bands. Except as identified in this paragraph, each length of pipe shall show all of the following:

1. The manufacturer's name or trademark.

2. ASTM marking or API monogram.

3. Specification number and grade.

4. Diameter in inches.

5. Wall thickness or weight in pounds per foot.

6. Whether seamless or welded and type of weld and the heat number.

(e) *Mill certification.* When the department determines that the water well casing pipe or the pipe markings are of questionable condition, the department may request that the well driller or well constructor provide the mill certification papers obtained directly from the manufacturer that list the pipe specifications and match the heat numbers on the pipe.

(f) *Assembly and installation.* A well driller or well constructor shall assemble and install steel well casing in accordance with all of the following:

1. When steel well casing pipe is driven or installed it shall be accomplished in a manner such that damage to the well casing pipe does not result.

2. Steel well casing pipe shall be assembled watertight by correctly mated, recessed type couplings having the weights and diameters as listed in Table B or by means of welded joints.

3. Two-inch diameter or smaller well casing pipe couplings shall have at least 11-1/2 threads per inch. Larger diameter couplings shall have at least 8 threads per inch.

4. Steel well casing pipe to be assembled with welded joints shall have beveled ends and the bevels shall be properly aligned and clean and free of burs prior to welding. The casing shall be welded using the procedures of s. NR 812.18 and the weld shall fill the bevel.

TABLE B
MINIMUM STEEL WELL CASING PIPE AND COUPLING WEIGHTS AND DIMENSIONS

WELL CASING PIPE									REAMED & DRIFTED COUPLINGS	
Size	Weight in Pounds per Foot				Thickness in Inches		Diameter in Inches		Diameter & Length	
Diameter in Inches	Threaded & Coupled		Plain End		Low Caps	Potable High Cap, School & WWTP	External	Internal	External Diameter in Inches	Length in Inches
	Low Caps	Potable High Cap, School & WWTP	Low Caps	Potable High Cap, School & WWTP						
1	1.7		1.68		0.133		1.315	1.049	1.576	2-5/8
1-1/4	2.3		2.27		0.140		1.660	1.380	1.900	2-3/4
1-1/2	2.75		2.72		0.145		1.900	1.610	2.200	2-3/4
2	3.75		3.65		0.154		2.375	2.067	2.750	2-3/4
2-1/2	5.90		5.79		0.203		2.875	2.469	3.250	2-7/8
3	7.70		7.58		0.216		3.500	3.068	4.000	3-15/16
3-1/2	9.25		9.11		0.226		4.000	3.548	4.625	4-1/16
4	11.00		10.79		0.237		4.500	4.026	5.200	4-3/16
5	15.00		14.62		0.258		5.563	5.047	6.296	4-5/16
6	19.45		18.97		0.280		6.625	6.065	7.390	4-1/2
6-5/8 OD	20.00		19.49		0.288		6.625	6.049	7.390	4-11/16
7 OD	23.00		22.63		0.317		7.000	6.366	7.657	4-11/16
8	25.55	29.35	24.70	28.55	0.277	0.322	8.625	8.071	9.625	4-11/16
10	35.75	41.85	34.25	40.48	0.307	0.365	10.750	10.136	11.750	5-1/16
12	45.45	51.15	43.77	49.56	0.330	0.375	12.750	12.090	14.000	5-9/16
14 OD	57.00		54.57		0.375		14.000	13.250	15.000	5-15/16
16 OD	65.30		62.58		0.375		16.000	15.250	17.000	6-3/8
18 OD	73.00		70.59		0.375		18.000	17.250	19.000	6-3/4
20 OD	81.00		78.60		0.375		20.000	19.250	21.000	7-1/8
22 OD			114.81		0.500		22.000	21.000		7-5/8
24 OD			125.49		0.500		24.000	23.000		

Note: The weight of threaded and coupled well casing pipe includes the weight of the coupling.

(7) THERMOPLASTIC WELL CASING PIPE. Thermoplastic well casing pipe and couplings used in the construction of wells shall be new and unused and shall meet all of the following requirements:

(a) *Specifications.* Thermoplastic well casing pipe and couplings shall be polyvinyl chloride (PVC) or acrylonitrile-butadiene-styrene (ABS) material produced to and meeting the ASTM F480 specification as well as all of the following requirements:

1. Styrene-rubber thermoplastic well casing pipe, including ASTM F 480 may not be used.

2. Thermoplastic well casing shall have a standard dimension ratio of 21, 17, or 13.5.

3. Well casing pipe, pipe couplings, cement, primer, and other components used shall meet the requirements of NSF Standard 14 as it relates to well casing pipe, or an approved equivalent organization.

4. Thermoplastic well casing that terminates above ground shall be of the type with inhibitors recommended for use in direct sunlight, be painted with a light colored acrylic or latex paint, or shall be contained in a pumphouse or in an oversized steel pipe extending from below the frost depth to the top of the thermoplastic pipe.

(b) *Defective pipe*. Thermoplastic well casing pipe shall be inspected for defects by the well driller or well constructor prior to use. Pipe with defects may not be used by a well driller or well constructor for permanent well casing pipe.

(c) *Marking requirements*. The well casing pipe shall have certification markings from the manufacturer in accordance with the ASTM F 480 specification and this section. The pipe shall be marked at least every 5 feet showing all of the following:

1. The nominal size.

2. Standard dimension ratio or schedule number.

3. Type of material.

4. The wording "well casing" followed by impact classification.

5. Designation "ASTM F 480" including year of issue of the standard with which the well casing pipe complies.

6. Manufacturer's name or trademark.

7. Manufacturer's code for resin manufacture, lot number, and date of manufacture.

8. The NSF-WC designation or other approved laboratory's seal or mark.

(d) *Assembly and installation*. Thermoplastic well casing pipe shall be assembled by the well driller or well constructor in a manner according to the specifications in ASTM F 480 using any of the following joining methods:

1. Flush-threaded joints.

2. Integral-bell, solvent-cemented joints.

3. Non-metallic restrained joints.

4. One-piece solvent cemented couplings.

(8) TEMPORARY CASING. Temporary casing pipe for all wells and heat exchange drillholes, or well casing pipe greater than 12-inch diameter used for nonpotable wells, may be a lighter weight steel pipe than specified for a given diameter in Table B.

(9) PIPE FOR LINERS. Liner pipe shall meet the requirements of s. NR 812.21 (2).

(10) DRIVE SHOES AND CASING SHOES. Drive shoes and casing shoes shall meet all of the following requirements:

(a) Drive shoes shall be factory manufactured and constructed of steel or iron with a hardened, beveled cutting edge.

(b) Drive shoes shall have an inside diameter equal to the inside diameter of the casing pipe and an outside diameter that is larger than the outside diameter of the well casing.

(c) Casing shoes shall be factory manufactured and constructed of steel or iron with carbide studs.

(d) Casing shoes shall have an inside diameter equal to the inside diameter of the casing wall.

(e) Pipe couplings may not be used as drive shoes.

(11) SCREENS. Well screens shall meet all of the following requirements:

(a) For potable low capacity wells, a continuous-slot screen composed of stainless steel, brass, or polyvinyl chloride (PVC), or a non-continuous slot screen approved under s. NR 812.091 shall be used.

(b) Screen selection for driven point wells is optional, except that screens having any lead content may not be used.

(c) For nonpotable high capacity wells, not including dewatering wells, a continuous-slot screen meeting the requirements of par. (a) or a low carbon steel or galvanized steel, continuous-slot screen shall be used.

(d) For nonpotable low capacity wells and dewatering wells, screens are not required; if used, screens may not have any lead content.

(12) GRAVEL PACKS. Gravel or coarse sand to be used for a gravel pack shall be uniformly graded, well rounded, washed, and sterilized silica-based rock gravel or coarse sand, shall be free from other material, and shall comply with the requirements of AWWA A100. The size of the gravel pack shall be based on a sieve analysis of the aquifer material. The 70%

retained size of the gravel pack shall be 4 to 6 times greater than the 70% retained size of the aquifer sample.

(13) PACKERS. Packers used to retain grout or reduce water flow shall be made of durable, nontoxic material. Lead and burlap packers may not be used.

(14) DRILLING WATER. Water used in the construction, reconstruction, or redevelopment of wells shall be clear water obtained from an uncontaminated source. The water shall be disinfected with chlorine with a residual of 100 mg/L (parts per million). The chlorine concentration may be mixed according to Table D in s. NR 812.12. The drilling fluid shall be maintained with a free-chlorine residual of 10 mg/L (parts per million) during drilling.

(15) GROUTING AND SEALING MATERIALS. All grouting and sealing materials shall be approved for use under s. NR 812.091. Water used for mixing grouting or sealing material shall be clear water obtained from an uncontaminated source. When allowed in ss. NR 812.13, 812.14, 812.151, 812.152 and 812.26, a well driller or well constructor may use any of the following material to grout an annular space or fill and seal a well or borehole:

(b) *Neat cement*. Neat cement grout shall consist of a mixture of cement and water in the following proportion: one 94-pound bag of Portland cement, ASTM C 150, Type I or API-10A, Class A; and 5 to 6 gallons of water. Ingredients, to increase fluidity, control shrinkage or time of set may be used only with a variance. Neat cement shall have a density of 15.0 to 15.8 pounds per gallon. Neat cement shall have a uniform consistency with no lumps and any commercially prepared grout shall be screened by the well driller or well constructor prior to pumping. Grout densities for neat cement mixes are provided in Table C.

(c) *Cement-bentonite*. Cement-bentonite grout shall consist of a mixture of powdered bentonite, cement and water and shall meet the following requirements:

1. Powdered bentonite may be added to the mixture described in par. (b) up to a ratio of 5 pounds per 94-pound bag of cement.

2. An additional 0.65 gallons of water per bag of cement may be added to the mix.

3. Cement-bentonite grout shall have a minimum density of 13.8 pounds per gallon. Grout densities for cement-bentonite mixes are provided in Table C.

(d) *Sand-cement*. Sand-cement grout shall consist of a mixture of cement, sand and water in the proportion of one 94-pound bag of Portland cement, ASTM C 150, Type I or API-10A,

Class A; a cubic foot of dry sand and 5 to 6 gallons of water. The sand shall meet the specifications for use in Portland cement concrete.

(e) *Concrete*. Concrete shall consist of a mixture of cement, water, sand, and gravel in the following proportion: one 94-pound bag of Portland cement (ASTM C 150, Type I or API-10A, Class A); an equal measure of sand and an equal measure of gravel, by weight or by volume; and not more than 6 gallons of water. As an alternative, a commercially prepared mix may be used if the mix has at least 6 bags of cement per cubic yard and the gravel size does not exceed 1/3 of the inside diameter of the tremie pipe used for filling and sealing the well or drillhole.

(f) *Sodium bentonite*. Sodium bentonite grout shall be a mixture of sodium bentonite and water that results in a grout containing 20 percent solids, or greater, by weight and shall be mixed according to the manufacturer's specifications.

(g) *Drilling mud and cuttings*. Drilling mud and cuttings is a mixture of native clay slurry or bentonite drilling mud mixed with drill cuttings. When allowed as an annular space seal, the mixture of drilling mud and cuttings shall have a mud weight of at least 11 pounds per gallon.

(h) *Sodium bentonite-sand*. Sodium bentonite-sand grout shall consist of a mixture of sodium bentonite mixed with clean silica sand up to a ratio of a 5 to 1 mixture of clean silica sand to bentonite grout. The clean silica sand used for this mix shall consist of silica sand with 80 percent or more of the sand smaller than 0.0117 inch (passing U.S. Sieve #50) in size.

(i) *Bentonite chips*. Bentonite chips shall be a commercially prepared and packaged angular fragments of 85% sodium montmorillonite.

(j) *Bentonite pellets*. Bentonite pellets shall be a commercially prepared and packaged pelletized bentonite product that is coated to delay hydration.

(k) *Bentonite granules*. Bentonite granules shall be a commercially prepared and packaged bentonite product consisting of 8 mesh pure bentonite, without additives.

(L) *Carbon-bentonite*. Carbon-bentonite grout shall be a carbon-bentonite premix product that is mixed and used following the manufacturer's specifications. Carbon-bentonite grout shall only be used as a sealing material for heat exchange or anode drillholes.

TABLE C
Cement Grouting or Sealing

Gallons of Water per 94-pound Sack of Cement	Pounds of Bentonite per Sack of Cement	Cubic Feet of Grout per Sack of Cement	Final Grout Density (pounds per gallon)

5.0	0	1.15	15.8
5.3	0	1.19	15.6
5.5	0	1.22	15.4
5.9	0	1.27	15.2
6.0	0	1.28	15.0
6.2	1	1.32	14.8
6.5	2	1.36	14.7
7.2	3	1.46	14.4
7.8	4	1.55	14.1
8.5	5	1.64	13.8

Note: Table C is Based on Halliburton Cementing Tables

(16) DRILLING AIDS. A well driller or well constructor may not use a drilling aid for well and heat exchange drillhole construction and reconstruction unless the drilling aid is approved for use under s. NR 812.091.

Note: A list of approved drilling aids is available on the department's website at https://dnr.wi.gov/topic/Wells/drillerPumpInstall.html.

Note: Copies of ASTM standards may be obtained directly from ASTM's website at https://www.astm.org/Standard/standards-and-publications.html. Copies of API standards may be obtained directly from API's website at https://www.api.org/products-and-services/standards. Copies of AWWA standards may be obtained directly from AWWA's website at https://www.awwa.org/publications/standards.aspx. Copies are also on file at the offices of the department and the legislative reference bureau.

NR 812.12 General drilled type well construction requirements.

(1) PLANNING. A well driller or well constructor shall plan and construct each well to comply with all of the following requirements:

(a) The well shall be adapted to the geologic and groundwater conditions of the proposed well site to ensure full utilization of every natural protection against contamination of the water bearing formation or formations and to exclude possible sources of contamination.

(b) The well shall provide an adequate and contaminant free water supply, where the natural geologic and groundwater conditions allow.

(c) The well shall conserve groundwater.

(d) The well shall allow reconstruction or rehabilitation.

(2) MATERIALS AND DESIGN. A well driller or well constructor shall construct each drilled well to comply with all of the following:

(a) The general and specific requirements outlined in ss. NR 812.13 to 812.16.

(b) The equipment and material requirements specified in s. NR 812.11.

(c) The requirements specified in s. NR 812.152 for potable high capacity, potable school, and wastewater treatment plant wells.

(d) The requirements of any approval issued by the department under s. NR 812.09.

(3) SPECIAL WELL CASING DEPTH AREAS. A well driller or well constructor shall provide for greater depth of well casing pipe in special well casing depth areas designated by the department where well histories show contamination extends to a greater depth. In some of these areas department approval shall be obtained for each well prior to construction.

(4) QUARRIES. A variance to the setback requirement specified in s. NR 812.08 is not required when the bottom of the quarry is or will be at an elevation higher than the elevation of the ground surface at the well site or if the quarry is no longer used and is permanently filled with water. A well driller or well constructor may construct a well within 500 feet of a quarry if the well is constructed in accordance with all of the following requirements:

(a) The well casing pipe and upper enlarged drillhole depth requirements shall be referenced from the permitted bottom of the quarry.

(b) An additional 20 feet of upper enlarged drillhole and well casing pipe shall be installed over the amount required for the bedrock formation that the well is completed in.

(c) The annular space shall be grouted with neat cement.

(5) DRIVING OR ADVANCING CASING. A well driller or well constructor may only drive or mechanically advance steel well casing. When a well driller or well constructor drives or advances casing, it shall be done in accordance with all of the following requirements:

(a) A drive shoe or casing shoe meeting the requirements specified in s. NR 812.11 (10) shall be welded or threaded to the bottom of the casing string.

(b) A drive shoe or casing shoe is not required for any temporary outer casing.

(6) PLUMBNESS AND ALIGNMENT. Well plumbness and alignment shall conform to the requirements specified in s. NR 812.19.

(7) UPPER ENLARGED DRILLHOLES. A well driller or well constructor shall ensure that any upper enlarged drillhole constructed by the driller is maintained at full diameter during casing setting and grouting.

(8) STARTER DRILLHOLES. When a well driller or well constructor constructs a starter drillhole less than or equal to 10 feet deep, the starter drillhole does not need to meet the minimum requirements for upper enlarged drillholes.

(9) LINERS. The installation of liners shall meet the requirements specified in s. NR 812.21.

(10) GROUTING AND SEALING. A well driller or well constructor shall complete all grouting and sealing requirements using the materials and mixtures specified in s. NR 812.11 and the methods specified in s. NR 812.20.

(11) GEOLOGIC SAMPLES. (a) Geologic samples shall be collected by a well driller or well constructor from all of the following:

1. All potable school wells.

2. High capacity potable and nonpotable wells when required by an approval issued by the department.

(b) Cuttings samples shall be collected at 5-foot depth intervals and at each change in geological formation and shall be submitted, along with a copy of the well construction report or a form specified by the department, to the Wisconsin Geological and Natural History Survey no later than 90 days following the completion of the well for the preparation of a geologic log of the well.

(12) FINAL CASING HEIGHT. The well driller or well constructor shall complete the well construction such that the well casing pipe extends at least 12 inches above the final ground grade, above a pumphouse or building floor or above any concrete or asphalt platform installed at or above the established ground surface. In addition, for wells in floodplains, the top of the well casing pipe shall terminate at least 2 feet above the regional flood elevation.

(13) FLOWING WELLS. A well driller or well constructor shall construct any flowing well in accordance with the requirements specified in s. NR 812.15.

(14) NONPOTABLE WELLS. The construction of nonpotable wells shall meet the requirements for low capacity potable wells. The drilling mud requirements and the sodium bentonite annular space sealing requirements during well drilling do not apply to nonpotable high capacity wells constructed with reverse rotary methods.

(15) WELL DEVELOPMENT. A well driller or well constructor shall develop a new well until the water is practicably clear and free of sand by any one of, or a combination or modification of, the following methods:

(a) *Mechanical surging.* A valved or solid plunger surge block may be used to create a surging action in the well. Accumulated material shall be removed periodically. A bailer may be used as the surge block.

(b) *Air surging.* An air compressor and piping may be used to create the surging and jetting action in the well. Water in the well shall be alternately brought to the surface by air lift pumping and allowed to drop back down the well to static condition by shutting the air off. This may be performed with an air-rotary drilling rig and drill stem.

(c) *Overpumping.* Continuous overpumping at a rate of at least 1 1/2 times the design capacity of the well or interrupted overpumping in conjunction with water line drain back to the well in 5-minute cycles may be used. Overpumping alone without a drain back provision or other surging method may not be used to develop screened wells.

(d) *Hydraulic jetting.* A nozzled jetting tool may be used to deliver water at high pressure and velocity to the zone being developed in conjunction with pumping the well.

(e) *Air-jetting.* A well driller or well constructor may use the same technique as hydraulic jetting described in par. (d), except with the use of air rather than water.

(16) WELL PUMP TEST. The well driller or well constructor shall conduct a pump test using the well driller's, the well constructor's, or the well owner's pump for each new or reconstructed well to determine the stable yield in gallons per minute, and the water level drawdown. A pump test may be conducted using air-rotary equipment. For flowing wells, the flow rate may be measured using an orifice plate with a manometer or equivalent.

Note: A stable pumping water level may not be possible in wells completed in crystalline bedrock.

(17) WELL DISINFECTION AND FLUSHING. (a) *Disinfection.* A well driller or well constructor shall thoroughly disinfect wells following completion of construction or reconstruction using a chlorine solution such as a sodium or calcium hypochlorite solution. Chlorine compounds having special additives may not be used. A well driller or well constructor shall disinfect wells in accordance with the following requirements:

1. A chlorine solution with a minimum of 100 mg/L of chlorine shall be used to disinfect wells and well drilling equipment and the disinfectant shall be prepared according to Table D.

2. The disinfectant shall be dispersed throughout the entire water column in the well. The disinfectant shall also be brought into contact with the inside of the well casing pipe above the static water level.

3. The disinfectant shall remain in the well for at least 2 hours except for emergency situations, when water is needed without delay. A contact time of at least 30 minutes shall be provided for emergency situations.

(b) *Flushing.* A well driller or well constructor shall thoroughly flush wells to remove the chlorine solution after disinfection.

TABLE D
Disinfection of Wells

Desired Chlorine Concentration (mg/L)	Quarts of Liquid Sodium Hypochlorite Household Bleach per 100 Gallons of Water (approximately 5% available chlorine 'regular strength')	Quarts of Liquid Sodium Hypochlorite Household Bleach per 100 Gallons of Water (approximately 8% available chlorine 'extra strength')	Pounds of Dry Calcium Hypochlorite Tablets per 100 Gallons of Water (Approximately 70% available chlorine)
100	0.7	0.4	0.14 (about 3 oz.)
200	1.4	1.0	0.30 (about 5 oz.)
300	2.2	1.5	0.40 (about 7 oz.)
400	2.9	2.0	0.50 (about 8 oz.)
500	3.6	2.4	0.60 (about 10 oz.)

Note: mg/L = milligrams per liter (parts per million)

NR 812.13 Drilled wells terminating in unconsolidated formations. A well driller or well constructor shall construct wells terminating in unconsolidated material according to the requirements specified in s. NR 812.12 and all of the following:

(1) MINIMUM DIAMETER. The minimum diameter for all drilled wells in unconsolidated formations, based on nominal size of well casing pipe is 2 inches.

(2) CASING DEPTH. Minimum casing depths shall be measured from the ground surface. The minimum well casing pipe depth for all drilled wells in unconsolidated formations, not including any screen, is 25 feet or 10 feet below the static water level when the static water level is greater than 15 feet below ground surface.

(3) CASING MATERIAL AND INSTALLATION. (a) Steel or thermoplastic well casing pipe, as specified in s. NR 812.11 (6) or (7), shall be used for low capacity wells and nonpotable high capacity wells.

(b) Thermoplastic casing may only be placed in an upper enlarged drillhole and may not be driven or jetted into place.

(c) Drilling tools such as drill bits or stabilizers may not be placed in the thermoplastic well casing pipe nor may any drilling or reconstruction occur after placement of the well casing pipe in the well. This restriction does not prohibit the installation or replacement of screens, or the insertion of equipment for the development of wells with screens.

(4) SCREENS. A well driller or well constructor shall install an adequate screen when necessary to prevent sand pumping conditions. Screens installed in a well shall meet the requirements of s. NR 812.11 (11). A well drill or well constructor shall install screens according to the following requirements:

(a) Screen installation shall be accomplished in a manner that prevents damage to the screen or casing and prevents material from bypassing the well screen.

(b) A packer or shale trap shall be used to provide a sand seal between the bottom of a well casing pipe and the top of a screen. Packers and shale traps shall meet the requirements of s. NR 812.11 (13).

(c) A riser pipe may be installed to extend upward from the top of the screen. The riser pipe material shall be thermoplastic or metal provided the metal does not have a lead content in excess of 0.25%.

(5) GRAVEL PACKS. The construction of a gravel pack well shall comply with the additional requirements specified in s. NR 812.16.

(6) DRIVING OR ADVANCING STEEL WELL CASING. A well driller or well constructor shall drive or advance casing according to the following requirements:

(a) The casing shall be equipped with a drive shoe or casing shoe meeting the requirements specified in s. NR 812.11 (10).

(b) Clay slurry, sodium bentonite slurry, or granular bentonite shall be maintained around the casing during advancement using any of the following methods:

1. When casing is driven or advanced from the ground surface, excavating a funnel-shaped depression around the casing to create a reservoir, which shall be kept filled with dry granular bentonite. The granular bentonite shall be kept dry at the surface during advancement.

2. Filling a starter drillhole or temporary outer casing with clay slurry or sodium bentonite slurry and drill cuttings having a mud weight of at least 11 pounds per gallon, or with dry granular bentonite, which shall be maintained around the outside of the casing.

3. Constructing an upper enlarged drillhole in accordance with sub. (7). The upper enlarged drillhole shall be kept filled to within 10 feet of the ground surface with clay slurry or sodium bentonite slurry and drill cuttings having a mud weight of at least 11 pounds per gallon, or with dry granular bentonite.

(7) UPPER ENLARGED DRILLHOLE. When an upper enlarged drillhole is constructed for any reason, it shall be completed in accordance with all of the following requirements:

(a) The minimum depth of an upper enlarged drillhole shall be one of the following:

1. To the final depth that the well casing is set.

2. To the bottom of any clay formation, or 20 feet, whichever is less when the casing is driven or mechanically advanced as specified in sub. (6) (b) 3.

(b) The minimum diameter of an upper enlarged drillhole shall meet the following requirements:

1. Four inches greater than the nominal diameter of the casing or couplings.

2. A well driller or well constructor may reduce the diameter of an upper enlarged drillhole to 3 inches greater than the nominal diameter of the casing when flush-threaded thermoplastic casing is used and the required sealing material, according to sub. (8), is placed in the annular space using a pressure grouting method according to the requirements of s. NR 812.20.

3. A well driller or well constructor may reduce the upper enlarged drillhole to 2 inches greater than the nominal diameter of the casing when welded steel casing is used and the required sealing material, according to sub. (8), is placed in the annular space using a pressure grouting method according to the requirements of s. NR 812.20.

(c) *Method of keeping hole open.* A well driller or well constructor shall maintain an upper enlarged drillhole at full diameter during drilling by any of the following methods:

1. Keeping the drillhole filled up to within 10 feet of the ground surface with drilling mud.

2. Circulating bentonite drilling mud.

3. Setting a temporary outer casing.

(d) *Grouting.* A well driller or well constructor shall grout an upper enlarged drillhole according to the requirements specified in sub. (8).

(8) GROUTING MATERIAL AND METHODS.

(a) Grouting material shall meet the requirements of s. NR 812.11 (15) and shall be placed in an annular space in accordance with the requirements specified in s. NR 812.20. A flowing well constructed with steel or thermoplastic casing shall be grouted using the materials specified in s. NR 812.15. Potable high capacity wells shall be grouted using the materials specified in s. NR 812.152.

(b) For a potable low capacity or nonpotable high capacity well with steel casing a well driller or well constructor shall use one of the following materials:

1. Clay slurry or bentonite drilling mud and cuttings when the upper enlarged drillhole is less than or equal to 20 feet in depth.

2. Neat cement.

3. Sand-cement.

4. Sodium bentonite.

5. Sodium bentonite-sand.

(d) For a potable low capacity or nonpotable high capacity well with thermoplastic casing a well driller or well constructor shall use one of the following materials:

1. Sodium bentonite.

2. Sodium bentonite-sand.

(9) DUAL AQUIFER PROHIBITION. A well driller or well constructor may not construct a well that is open to both an unconsolidated formation and a bedrock formation.

NR 812.14 Drilled wells in bedrock formations. A well driller or well constructor shall construct wells terminating in bedrock formations according to the requirements of s. NR 812.12 and the construction of wells in bedrock shall be completed to meet all of the following requirements:

(1) MINIMUM DIAMETER. The minimum diameter for bedrock wells is 6 inches.

(2) CASING DEPTH. Minimum casing depth shall be measured from the ground surface. The following requirements apply to the minimum casing depth in bedrock formations:

(a) *Sandstone*. Wells completed in sandstone bedrock shall have a minimum of 30 feet of casing.

(b) *Crystalline bedrock*. Wells completed in crystalline igneous or metamorphic bedrock shall have a minimum of 40 feet of casing.

(c) *Limestone or dolomite*. Wells completed in limestone or dolomite bedrock shall have a minimum casing depth as follows:

1. Forty feet when the depth to the top of limestone or dolomite is equal to or greater than 20 feet below the ground surface.

2. Sixty feet when the depth to the top of limestone or dolomite is less than 20 feet below the ground surface.

(3) CASING MATERIAL AND INSTALLATION. (a) *Material*. Only steel well casing pipe meeting the requirements of s. NR 812.11 (6) may be used as permanent casing for bedrock wells. Thermoplastic well casing pipe meeting the requirements of s. NR 812.11 (7) may only be used as a liner for bedrock wells.

(b) *Centering*. When well casing is set within an upper enlarged drillhole, it shall be centered within the drillhole to ensure an even annular space around the casing. When casing is placed in an upper enlarged drillhole that extends more than 80 feet below ground surface, a drive shoe or casing shoe shall be welded to the bottom of the casing and the casing shall be driven to a firm seat. The department may require, as a condition of an approval or in a special well casing area, that the well casing pipe be centered in the drillhole using any of the following methods:

1. A set of at least 3 centering guides shall be provided at every pipe joint within the bedrock to ensure an even annular space around the well casing pipe. A minimum of 2 sets of 3 centering guides shall be provided, one near the top of the bedrock and one at the bottom of the string of well casing pipe.

2. A drive shoe or casing shoe may be welded or threaded onto the bottom of the string of well casing pipe and, if the well casing pipe extends more than 63 feet into the bedrock, at least

one set of 3 centering guides shall be provided on the casing pipe within the bedrock. If only one set of guides is provided, it shall be installed within 5 feet of the top of the bedrock.

(c) *Hung casing pipe prohibition.* Casing shall be set to the bottom of an upper enlarged drillhole unless the casing is installed in compliance with the requirements of par. (d).

(d) *Screens.* Screens may be installed in loosely cemented sandstone wells. The requirements for screen materials and installation of the screen specified in s. NR 812.13 (4) and the requirements for gravel packs specified in s. NR 812.16 apply to drilled wells in bedrock formations.

(4) DRIVING OR ADVANCING CASING. A well driller or well constructor may drive or mechanically advance casing from the ground surface to the top of bedrock when the depth to the top of bedrock is equal to the minimum casing depths under sub. (3) or deeper. When casing is driven or mechanically advanced to the top of bedrock, it shall be completed in accordance with all of the following:

(a) *Drive shoe.* The casing shall be equipped with a drive shoe or casing shoe meeting the requirements specified in s. NR 812.11 (10).

(b) *Annular space sealing.* Clay slurry, sodium bentonite slurry, or granular bentonite shall be maintained around the casing during advancement using any of the following methods:

1. When casing is driven or advanced from the ground surface, excavating a funnel-shaped depression around the casing to create a reservoir, which shall be kept filled with dry granular bentonite. The granular bentonite shall be kept dry at the surface during advancement.

2. Filling a starter drillhole or temporary outer casing with clay slurry or sodium bentonite slurry and drill cuttings having a mud weight of at least 11 pounds per gallon, or with dry granular bentonite, which shall be maintained around the outside of the casing.

3. Constructing an upper enlarged drillhole in accordance with sub. (5). The upper enlarged drillhole shall be kept filled to within 10 feet of the ground surface with clay slurry or sodium bentonite slurry and drill cuttings having a mud weight of at least 11 pounds per gallon, or with dry granular bentonite which shall be maintained around the outside of the casing.

(c) *Driving to a firm seat.* The casing shall be driven or advanced to a firm seat into the top of bedrock.

(5) UPPER ENLARGED DRILLHOLE. When a well is constructed with casing that extends 5 feet or more below the top of bedrock, an upper enlarged drillhole shall be constructed to the

depth the casing is set. When a well driller or well constructor constructs an upper enlarged drillhole for any reason, it shall be constructed in accordance with all of the following:

(a) *Minimum diameter*. The minimum diameter of an upper enlarged drillhole shall meet the following requirements:

1. The upper enlarged drillhole shall be 4 inches greater than the nominal diameter of the casing when coupled joints are used.

2. A well driller or well constructor may reduce the diameter of an upper enlarged drillhole to 2 inches greater than the nominal diameter of the casing when welded steel casing is used and the required sealing material, according to the requirements of sub. (7), is placed in the annular space between the upper enlarged drillhole and the well casing pipe using a pressure grouting method according to the requirements of s. NR 812.20.

(b) *Method of keeping hole open.* A well driller or well constructor shall maintain an upper enlarged drillhole at full diameter during drilling by any of the following methods:

1. Keeping the drillhole filled up to within 10 feet of the ground surface with drilling mud.

2. Circulating bentonite drilling mud.

3. Setting a temporary outer casing to the top of bedrock.

4. Circulating air, air and water, or drilling foam when the drillhole is constructed through non-caving clay, silt, or hardpan.

(c) *Minimum depth*. The minimum depth of an upper enlarged drillhole shall be one of the following:

1. To the final depth that the well casing is set.

2. To the bottom of any clay formation, or 20 feet, whichever is less, when the casing is driven or advanced to the top of bedrock in accordance with sub. (4) (b) 3.

(d) *Grouting*. A well driller or well constructor shall grout an upper enlarged drillhole according to the requirements specified in sub. (7).

(6) LOWER DRILLHOLE. A well driller or well constructor shall complete the drilling of a lower drillhole in accordance with all of the following:

(a) The lower drillhole may not be constructed prior to grouting an annular space unless the casing is first driven to a firm seat in bedrock.

(b) Drill cuttings may not fill an open annular space during the drilling of a lower drillhole, except when casing is driven or advanced to the top of bedrock in accordance with sub. (4) (b) 3.

(c) Cement grout shall set for a minimum of 12 hours prior to drilling a lower drillhole.

(7) GROUTING AND SEALING. A well driller or well constructor shall seal annular spaces using one of the pressure grouting methods specified in s. NR 812.20. Grouting material shall meet the requirements specified in s. NR 812.11 (15). A flowing well shall be grouted using the materials specified in s. NR 812.15. Potable high capacity wells shall be grouted using the materials specified in s. NR 812.152. A well driller or well constructor shall seal annular spaces with any of the following materials:

(a) Sodium bentonite, sodium bentonite-sand, or a mixture of clay slurry or bentonite drilling mud and cuttings when the upper enlarged drillhole is less than or equal to 20 feet in depth.

(b) Sodium bentonite, sodium bentonite-sand, neat cement or bentonite-cement when the upper enlarged drillhole extends less than 5 feet into the top of bedrock..

(c) Neat cement or bentonite-cement when the upper enlarged drillhole extends 5 feet or more into the top of bedrock.

(8) BENTONITE CHIPS IN FRACTURED FORMATIONS. A well driller or well constructor may use bentonite chips in an annular space when fractures, voids, or caverns are encountered that prevent the flow of grout at the surface. When bentonite chips are used by a well driller or well constructor to seal fractures in an annular space, the chips shall be placed in accordance with all of the following:

(a) The upper enlarged drillhole shall be a minimum of 4 inches larger than the nominal diameter of the permanent casing and shall extend to the depth of any fractures, voids or caverns encountered greater than 20 feet below the ground surface.

(b) The upper enlarged drillhole shall be free of drilling mud or cuttings.

(c) Any bentonite chips placed below the water table shall be screened and poured in a manner that prevents bridging.

(d) Any bentonite chips placed above the water table shall be hydrated using water meeting the requirements specified in s. NR 812.11 (14).

(e) The volume of bentonite chips used shall be limited to the minimum needed to resume grouting according to the requirements specified in s. NR 812.20.

(f) The number of bags or volume of chips used, the depth they were placed, and the reason they were needed shall be noted on the well construction report.

(9) DUAL AQUIFER PROHIBITION. Wells may not be constructed open to both an unconsolidated formation and a bedrock formation.

(10) WELLS CONSTRUCTED INTO THE MAQUOKETA SHALE. Wells constructed or reconstructed to withdraw water from any of the aquifers beneath the Maquoketa Shale and the Niagara formations in the eastern part of the state shall be cased and grouted into the Maquoketa Shale formation except in areas designated by the department as special well casing pipe depth areas. If a liner is used to case off the Niagara formation, the Maquoketa Shale formation or both, it shall be installed and grouted in place in accordance with s. NR 812.21.

NR 812.15 Flowing wells.

(1) CONTROL OF FLOW. When a well driller or well constructor constructs a flowing well, the flow shall be confined to the interior of the well casing. When the flow of water is not contained to the interior of the well casing using planned construction methods, the well driller or well constructor shall notify the department of the location of the flowing well immediately, and take one of the following actions:

(a) Reconstruct the well to contain the flow to the interior of the casing.

(b) Fill and seal the well according to one of the methods specified in s. NR 812.26 (6) (i).

(2) GENERAL REQUIREMENTS. A flowing well constructed with an upper enlarged drillhole shall be grouted in accordance with par. (c). When a new well is constructed to replace a well with uncontrolled flow, the well shall be constructed to meet all of the following requirements:

(a) *Upper enlarged drillhole requirement.* An upper enlarged drillhole shall be constructed in accordance with the requirements specified in subs. (3) or (4).

(b) *Driving or advancing casing.* Steel well casing shall be driven or advanced only through the bottom of an upper enlarged drillhole constructed in accordance with the

requirements specified in subs. (3) or (4). The upper enlarged drillhole shall be kept filled with drilling mud with a mud weight of at least 9 pounds per gallon or with dry granular bentonite, which shall be maintained around the outside of the casing. Approved drilling additives may be added to the drilling mud to increase the mud weight.

(c) *Grouting requirement*. The annular space of flowing wells shall be grouted with neat cement using the methods specified in s. NR 812.20. Flowing wells constructed with thermoplastic casing may be grouted with neat cement.

(3) CONSTRUCTION REQUIREMENTS IN UNCONSOLIDATED FORMATIONS. In addition to the general requirements of this section and the requirements specified in ss. NR 812.10 to NR 812.13, a well driller or well constructor shall construct or reconstruct a flowing well in unconsolidated formations according to all of the following requirements:

(a) *Upper enlarged drillhole*. An upper enlarged drillhole shall be constructed to at least 25 feet or halfway through any known confining bed, whichever is deeper, except when the well is double cased in accordance with par. (e).

(b) *Minimum diameter*. The upper enlarged drillhole shall be a minimum of 4 inches larger than the nominal diameter of any casing to be grouted, except as allowed under par. (e).

(c) *Method of keeping the hole open.* The upper enlarged drillhole shall be kept open during construction using any of the following methods:

1. Driving temporary casing to the depth specified in par. (a).

2. Circulating drilling mud with a weight of at least 9 pounds per gallon. Additives approved under s. NR 812.091 may be added to the drilling mud to increase the mud weight.

(d) *Screens*. A well screen may be placed according to the requirements specified in s. NR 812.13 (4) prior to grouting.

(e) *Double cased wells*. When a well is double cased, it shall be constructed in accordance with all of the following requirements:

1. The nominal casing diameter of the outer casing may be reduced to a minimum of 2 inches in diameter greater than the nominal diameter of the inner casing when welded steel or flush-threaded thermoplastic casing is used for an inner casing.

2. An upper enlarged drillhole shall be constructed into the confining bed in accordance with par. (c).

3. The outer casing shall be placed in the upper enlarged drillhole and grouted in place according to the requirements specified in sub. (2). The grout shall be allowed to set for a minimum of 24 hours before drilling continues.

4. A second upper enlarged drillhole shall be constructed to at least the minimum casing depth for the formation encountered and in accordance with par. (c).

5. The inner casing shall be placed in the upper enlarged drillhole and grouted in place according to the requirements specified in sub. (2). The grout shall be allowed to set for a minimum of 24 hours before drilling continues.

(4) CONSTRUCTION REQUIREMENTS IN BEDROCK FORMATIONS. In addition to the general requirements of this section and the requirements specified in ss. NR 812.10 to 812.14, a well driller or well constructor shall construct or reconstruct a well in bedrock formations according to all of the following requirements:

(a) *Upper enlarged drillhole.*

1. An upper enlarged drillhole shall be constructed to the minimum casing depth for the bedrock formation encountered or halfway through any known confining bed, whichever is deeper, except when the well is double cased in accordance with par. (e).

2. When the depth to the top of bedrock is more than the minimum casing depth for the bedrock formation encountered, the upper enlarged drillhole depth may be reduced to 25 feet below ground surface when steel casing is driven or advanced according to the requirements of sub. (2) (b).

(b) *Minimum diameter.* The upper enlarged drillhole shall be a minimum of 4 inches larger than the nominal diameter of any casing to be grouted, except when the well is double cased in accordance with par. (e).

(c) *Method of keeping the hole open.* The upper enlarged drillhole shall be kept open during construction using any of the following methods:

1. Driving temporary casing to the depth of casing setting or to the top of bedrock.

2. Circulating drilling mud with a weight of at least 9 pounds per gallon. Approved additives may be added to the drilling mud to increase the mud weight.

(d) *Seating casing.* Any casing set into an upper enlarged drillhole constructed more than 5 feet into bedrock shall be driven to a firm seat prior to grouting the annular space.

(e) *Double cased wells.* When a well is double cased in bedrock, it shall be constructed in accordance with all of the following requirements:

1. The outer casing may be reduced to a minimum of 2 inches in diameter greater than the nominal diameter of the inner casing when welded steel casing is used as an inner casing. The minimum diameter of an inner casing is 6 inches.

2. An upper enlarged drillhole shall be constructed into the confining bed in accordance with par. (c).

3. The outer casing shall be placed in the upper enlarged drillhole and grouted in place according to the requirements specified in sub. (2). The grout shall be allowed to set for a minimum of 24 hours before drilling continues.

4. A second upper enlarged drillhole shall be constructed to at least the minimum casing depth for the formation encountered and in accordance with par. (c).

5. The inner casing shall be placed in the upper enlarged drillhole and grouted in place according to the requirements specified in sub. (2). The grout shall be allowed to set for a minimum of 24 hours before drilling continues.

NR 812.151 Heat exchange drillhole location and construction requirements. A heat exchange driller is responsible for constructing all heat exchange drillholes in accordance with the requirements specified in ss. NR 812.10 to 812.12 and all of the following requirements:

(1) LICENSE REQUIREMENT. An individual who performs heat exchange drilling is required to be a licensed heat exchange driller except that a license is not required to perform heat exchange drilling if an individual is employed by a licensed heat exchange driller or a person registered as a business to perform heat exchange drilling and all other requirements under this section and ss. NR 812.10 to 812.12 are met.

(2) APPROVALS. A heat exchange driller shall obtain any approvals required in compliance with s. NR 812.09 (4) (w), (x), (y), or (z) prior to starting drilling and shall follow any conditions required by an approval.

(3) NOTIFICATION OF DRILLING. A heat exchange driller shall obtain a well notification permit from the department at least 24 hours prior to the start of drilling.

(4) LOCATION.

(a) A heat exchange driller shall ensure that heat exchange drillholes are separated from potential contamination sources. A distance of 10 feet shall be maintained between a heat exchange drillhole and any of the following:

1. A non-municipal water supply well.

2. An onsite waste disposal system.

3. A buried fuel storage tank.

(b) Prior department approval is required for any heat exchange drillhole located within 400 feet of a municipal water supply well.

(5) TEMPORARY CASING. A heat exchange driller may use any of the following materials for temporary casing for heat exchange drillholes:

(a) Steel casing meeting the requirements specified in s. NR 812.11 (6).

(b) Thermoplastic casing meeting the requirements specified in s. NR 812.11 (7), but only in caving sand formations.

(6) PRESSURE TESTING. Vertical heat exchange loop piping shall be pressure tested with potable water or an approved fluid in the loop, according to manufacturer's specifications.

(7) DRILLING FLUIDS. Drilling fluid shall be less dense than the grout to facilitate proper sealing of heat exchange drillholes.

(8) SURFACE PROTECTION. A heat exchange driller shall protect heat exchange drillholes to prevent surface contamination from entering the drillhole during the drilling operation and when the driller is not at the drilling site. Drillholes may not remain open and ungrouted for more than 24 hours after completion.

(9) GROUTING. All materials used to grout a heat exchange drillhole shall be approved for use under s. NR 812.091 and shall meet the requirements specified in s. NR 812.11. A heat exchange driller shall use one of the following materials to grout heat exchange drillholes:

(a) Neat cement, if potable water or an approved fluid is continuously circulated in the loop pipe to prevent potential loop pipe deformation.

(b) A cement-bentonite mix.

(c) Sodium bentonite.

(d) Sodium bentonite-sand grout.

(e) Carbon-bentonite grout.

(10) GROUTING METHOD. A heat exchange driller shall use the following method to grout heat exchange drillholes:

(a) Grout shall be placed in one continuous operation, if possible.

(b) For drillholes 25 feet in depth or more, grout shall be pumped through a tremie pipe under pressure according to the following requirements:

1. The pipe shall be placed to the bottom of the drillhole and the grout shall be placed from the bottom up.

2. The tremie pipe shall be kept submerged in the grout at all times during grouting.

3. The tremie pipe may be pulled back during grouting as long as the end of the tremie pipe remains submerged in the grout.

(c) For drillholes less than 25 feet in depth, grout may be placed using a gravity method as specified in s. NR 812.20 (4).

(11) FUSION WELDING. Fusion welding connection for vertical heat exchange piping shall be done using socket fusion, saddle fusion or butt fusion type, in accordance with pipe manufacturer's instructions or as referenced in ASTM D 2610, D 2683 and D2657. Joint surfaces shall be clean and moisture free.

(12) REPORTING. A heat exchange driller shall submit a report of the heat exchange drillhole project, on a form prescribed by the department, within 30 days following the date of completion of the project.

(13) HEAT EXCHANGE FLUIDS. Only department approved heat exchange fluids may be used in the piping placed in heat exchange drillholes.

(14) FILLING AND SEALING. Unused heat exchange loops and drillholes shall be filled and sealed using the materials and methods specified in s. NR 812.26.

NR 812.152 Construction requirements for potable high capacity wells, potable school wells, and wastewater treatment plant wells. Potable high capacity wells, potable school wells, and wastewater treatment plant wells shall be planned and constructed according to the location, approval, and general requirements specified in ss. NR 812.08 to NR 812.12, and according to all of the following requirements:

(1) MINIMUM DIAMETER. The minimum casing and lower drillhole diameter for potable high capacity wells, potable school wells and wastewater treatment plant shall meet the following requirements:

(a) Four inches for wells completed in unconsolidated formations.

(b) Six inches for wells completed in bedrock formations.

(2) CASING MATERIAL. Only steel well casing pipe meeting the requirements of s. NR 812.11 (6) may be used.

(3) UPPER ENLARGED DRILLHOLE. An upper enlarged drillhole is required for all wells. An upper enlarged drillhole shall be constructed according to the following requirements:

(a) An upper enlarged drillhole shall be a minimum of 3 inches larger than the outside diameter of welded casing pipe, or 3 inches larger than the diameter of the casing couplings, when couplings are used.

(b) The upper enlarged drillhole shall be constructed to at least the minimum casing depth requirements specified in sub. (4).

(c) The upper enlarged drillhole shall be maintained at full diameter for the entire depth by any of the following methods:

1. Circulating bentonite drilling mud.

2. Setting a temporary casing to the bottom of the drillhole, or to the top of bedrock.

(4) CASING DEPTH. Minimum casing depths are measured from the ground surface. All wells shall be constructed with casing that extends to the minimum depth for the geologic formation they are completed in according to the all of the following requirements:

(a) *Wells completed in unconsolidated formations*.

1. Sixty feet or 20 feet below the static water level when the static water level is greater than 40 feet.

2. One hundred feet, or 20 feet below the static water level when the static water level is greater than 80 feet, when the well is to supply water for a wastewater treatment plant and there is a treatment pond or lagoon or sludge beds on the property.

(b) *Wells completed in bedrock*.

1. Sixty feet or to the depth of bedrock when the top of bedrock is more than 60 feet below ground surface.

2. One hundred feet when the well is to supply water for a wastewater treatment plant and there is a treatment pond or lagoon or sludge beds on the property.

(5) GROUTING. The grouting of an annular space shall be accomplished according to all of the following requirements:

(a) Only neat cement grout meeting the specification under s. NR 812.11 (15) (b) shall be used.

(b) Grout shall be placed using an approved pressure grouting method as specified in s. NR 812.20 (3), except that the grout shall be allowed to set for a minimum of 24 hours before drilling is resumed.

(c) Any temporary casing used during the construction of the upper enlarged drillhole shall be removed.

(6) DRIVING OR ADVANCING CASING. Casing may be placed to the bottom of an upper enlarged drillhole meeting the requirements specified in sub. (3) and driven or advanced through unconsolidated material to the final casing depth or to the top of bedrock.

(7) SCREENS. Screens shall meet all of the following requirements:

(a) Screens shall be continuous-slot screen, v-shaped or wire-wrap on a rod base type and composed of stainless steel or lead-free brass.

(b) Screens may be permanently attached to the casing or riser pipe, or the screen may be placed using the bail-down method or by pushing the screen to the bottom of the casing and pulling it back to expose the screen.

(8) GRAVEL PACKS. Gravel packs shall be placed according to the requirements specified in s. NR 812.16.

(9) GEOLOGIC SAMPLES. Geologic samples shall be collected and submitted according to the requirements specified in s. NR 812.12 (11) (b) from all of the following:

(a) All potable school wells.

(b) High capacity potable wells when required by an approval issued by the department.

NR 812.16 Gravel packs.

(1) CONDITIONS. A well driller or a well constructor may construct a screened well with a gravel pack under any of the following conditions:

(a) In an unconsolidated formation well when the natural formation comprising the aquifer is very fine grained or when the aquifer formation is highly variable in size.

(b) In loosely cemented sandstone aquifers that require screening to prevent sand pumping conditions.

(c) In badly fractured or decomposed crystalline bedrock formations.

(2) MATERIAL. The gravel or sand used to construct a gravel pack shall meet the requirements specified in s. NR 812.11 (12).

(3) SCREENS. Screens to be placed in gravel pack wells shall have a set of centering guides on the top and bottom of the screen to ensure an even gravel pack. The screen slot openings shall be sized to retain 90% of the gravel pack. Screen types and materials shall meet the requirements specified in s. NR 812.11 (11). The screen may either be permanently welded or threaded onto the bottom of the well casing pipe or may be installed by pushing the screen to the bottom of the casing pipe and then pulling back the casing pipe to expose the screen.

(4) PLACEMENT. Gravel packs shall be placed in accordance with all of the following requirements:

(a) The gravel pack shall be placed through a tremie pipe placed in the annular space.

(b) The gravel pack shall surround the entire screen and shall extend at least 2 feet above the top of the screen.

(c) At least a 2-foot sand seal shall be placed upon the top of the gravel pack to prevent the required annular space sealing material from entering the gravel pack.

(d) For potable wells, the gravel pack may not extend closer to the ground surface than the minimum depth for the upper enlarged drillhole specified in s. NR 812.152 (3).

(e) For nonpotable high capacity wells, the gravel pack may not extend more than 20 feet above the top of the screen.

(5) THICKNESS. The diameter of the upper enlarged drillhole shall be sized to accommodate the thickness of the gravel pack. The gravel pack shall be at least 2 inches greater than the nominal radius of the screen.

NR 812.18 Welding procedures. Plain end well casing pipe shall be welded watertight using welding procedures for plain end well casing pipe in accordance with the specifications in the American Welding Society manual AWS D10.12, "Guide for Welding Mild Steel Pipe."

Well casing pipe to be welded shall conform to the specifications in s. NR 812.11 (6). Pitless adapter connections to well casing pipe shall be made watertight in accordance with welding procedures in the American Welding Society manual AWS D1.1, "Structural Welding Code-Steel."

Note: Copies of AWS manuals may be obtained directly from the American Welding Society's website at www.aws.org. Copies are also on file at the offices of the department and the legislative reference bureau.

NR 812.19 Well plumbness and alignment. A well driller or well constructor shall construct a well to meet all of the following requirements:

(1) PLUMBNESS. The deviation per 100 feet of well depth from plumb of the center line of the well may not exceed 75% of the well diameter for any well with casing that is 10 inches in diameter or larger.

(2) ALIGNMENT. (a) The well shall allow the free passage of the pump to be permanently installed in the well to the depth of pump setting plus 25% of that depth.

(b) The well shall be aligned so that it does not cause damage to the bearings of a lineshaft turbine pump.

NR 812.20 Grouting and sealing. A well driller or well constructor shall complete the grouting or sealing of annular spaces and drillholes using all of the following methods and materials as are applicable:

(1) GROUTING AND SEALING MATERIAL. Materials used for grouting and sealing shall meet the requirements specified in s. NR 812.11.

(2) GENERAL REQUIREMENTS.

(a) *Tremie pipes.* All of the following general requirements apply to the use of tremie pipes during grouting:

1. The tremie pipe shall be placed to the bottom of the upper enlarged drillhole.

2. When a tremie pipe is placed on the outside of a casing string, it may not be permanently attached to the casing during setting.

3. The tremie pipe shall move freely in the annulus prior to the start of grouting.

4. If the tremie pipe is pulled back during grouting, the bottom of the tremie pipe shall remain submerged in grout.

5. The tremie pipe shall be removed after grouting. If the entire length of tremie pipe cannot be removed after grouting, the driller shall note the reason that the tremie pipe could not be fully removed on the well construction report for the well.

(b) *Grouting and sealing.* All of the following general requirements apply to the grouting and sealing of wells:

1. Grout shall be placed from the bottom of the annular space to the ground surface.

2. The density of the grout flowing from the annular space at the ground surface shall be the same as the density of the grout being placed.

3. Grout shall be placed in one operation. When grout fails to come to the ground surface in fractured bedrock formations after pumping more than the calculated amount of grout to fill the annulus, the grouting operation may be interrupted to allow the grout to set, or bentonite chips may be used as allowed under s. NR 812.14 (8), and grouting shall continue as soon as possible. If circumstances prevent completing the grouting work in one operation, the well driller or well constructor shall report the reason on the well construction report.

4. Any settling of the grout more than 6 feet below the ground surface shall be made up by adding grout until it comes back up to the ground surface.

5. Cement grouts shall be allowed to set for a minimum of 12 hours before drilling operations continue.

(c) *Temporary casing removal.* When a temporary outer casing is used to construct the upper enlarged drillhole, a well driller or well constructor shall make an attempt to remove the temporary outer casing during or after the grouting process. If possible, the temporary outer casing shall be removed. The grout level shall remain above the bottom of the casing during removal of the casing.

(3) PRESSURE GROUT PLACEMENT METHODS. A well driller or well constructor shall complete the pressure grouting of wells using any of the following methods:

(a) *Tremie pipe-pumped.* The grout material shall be placed by a pump through a tremie pipe into the annular space between the well casing pipe and the upper enlarged drillhole wall or inside surface of the temporary outer casing.

(b) *Grout shoe-continuous injection.* The grout shoe-continuous injection method of grouting shall be completed in accordance with all of the following:

1. The bottom of the well casing pipe shall be fitted with a grout shoe equipped with a check valve.

2. A tremie pipe or drill stem shall be connected to the grout shoe and shall extend up through the well casing pipe to a grout pump at the ground surface.

3. The well casing pipe shall be suspended a short distance above the bottom of the upper enlarged drillhole.

4. Grout material shall be pumped through the tremie pipe and the grout shoe until the entire annular space is filled with grout.

5. The tremie pipe or drill stem shall be removed and the well casing pipe shall be set to the bottom of the upper enlarged drillhole.

(d) *Braden-head method.* All of the following requirements apply to the use of the Braden-head method of grouting:

1. The well casing pipe shall be suspended a short distance above the bottom of the upper enlarged drillhole.

2. The well casing pipe and annulus shall be filled with water, drilling mud, or bentonite slurry. A tremie pipe shall be set inside the well casing pipe to the bottom and shall extend watertight through a sanitary well seal installed securely in the top of the well casing pipe. A packer may be installed inside the well casing pipe, at depth, as an alternative to using a well seal at the top.

3. The grout shall be pumped down the tremie pipe and up the annular space.

4. Immediately following grout flow at the surface, the well casing pipe shall be set to the bottom of the upper enlarged drillhole of an unconsolidated formation well or driven to a firm seat in bedrock.

(e) *Grout displacement method.* The grout displacement method may only be used for wells when the upper enlarged drillhole is less than or equal to 200 feet deep or when drilling mud or bentonite slurry has been circulated in the upper enlarged drillhole from the bottom up to the ground surface prior to the grouting. All of the following requirements apply to the use of the grout displacement method:

1. The well driller or well constructor shall place a measured volume of grout that is equal to the volume of the annular space plus at least 15% into the upper enlarged drillhole through a tremie pipe.

2. The well casing pipe shall be fitted with centering guides and a drillable plug at the bottom and shall be lowered through the grout to the bottom of the upper enlarged drillhole allowing the grout to be forced up into the annular space.

3. If necessary, pressure shall be applied and maintained on the top of the well casing pipe to hold it in place for at least 12 hours or until the grout sets, whichever is longer. Water may be added to the well casing pipe to provide extra weight.

4. If the grout does not flow at the ground surface, the remainder of the annular space shall be filled with grout placed through a tremie pipe that shall be at the drill site.

(4) NON-PRESSURE GROUTING. The tremie pipe-gravity method of non-pressure grouting may be used when the upper enlarged drillhole is less than 100 feet deep and is at least 4 inches larger in diameter than the nominal diameter of the well casing pipe. Grout material may flow by gravity through a funnel or hopper connected to a tremie pipe that extends to the bottom of the upper enlarged drillhole.

NR 812.21 Liners. A well driller or well constructor shall install a liner in accordance with all of the following requirements:

(1) LINERS INSTALLED TO CORRECT CONTAMINATION. Any liner installed to address a water supply with contaminant levels in excess of the standards specified in s. NR 812.06 or to prevent cross-migration between aquifers shall be grouted in place using the procedures under sub. (5).

(2) PIPE MATERIAL. Pipe used to line a well shall meet the requirements specified in s. NR 812.11 (6) or (7). Ungrouted steel liner pipe may have a lesser wall thickness than is required in Table B for the diameter of well casing pipe but shall have a wall thickness of at least 0.216 inches.

(3) DIAMETER OF PIPE. Liner pipe shall be the largest practical diameter allowing installation in the well. When a liner is grouted in place, it shall have a nominal diameter at least 2 inches smaller than the nominal diameter of the permanent well casing pipe or the diameter of the drillhole.

(4) LINER INSTALLATION. Liner pipe shall extend at least 10 feet above the static water level or packers shall be installed far enough above and below the caving zone to prevent further entrance of material into the well. When the liner pipe does not extend to the bottom of the well, the liner pipe shall be supported on the bottom and top with a pipe flange or packer installed between the outside of the liner and the inside of the drillhole.

(5) GROUTING PROCEDURES. A well driller or well constructor shall grout a liner to meet all of the following requirements:

(a) The liner pipe shall be centered within the drillhole and casing during grouting.

(b) When the liner pipe does not extend to the bottom of the well, a flange or approved packer shall be provided at the bottom of the liner between the outside of the liner and the inside of the drillhole or the inside of the well casing pipe, or the liner shall rest on backfill material to be later drilled or bailed out.

(c) The liner pipe shall extend to the ground surface or shall extend at least to the bottom of the pitless adapter when one is used.

(d) The liner pipe shall be completely sealed in place from the bottom of the liner to the top of the liner with neat cement grout using a pressure grouting method according to the grouting requirements specified in s. NR 812.20. The liner shall be supported until the grout has set.

NR 812.22 Well rehabilitation and batch chlorination.

(1) REHABILITATION. All of the following requirements apply to the rehabilitation of a well by a well driller or well constructor:

(a) *Redevelopment*. The methods described for development under s. NR 812.12 (15) may be used to redevelop a well.

(b) *Chemical conditioning.*

1. Noncontinuous chemical treatment of a well, except for batch chlorination, shall be conducted under the supervision of a licensed water well driller or a Wisconsin registered professional engineer. Acidation of a well shall be done with materials approved for use under s. NR 812.091 and in a manner to prevent damage to the well or pump and to prevent any hazard to humans or property. The acid shall be inhibited and shall be neutralized upon removal from the well.

2. Noncontinuous chemical treatment of pumps or pump intake screens shall be conducted under the supervision of a licensed pump installer or a Wisconsin registered professional engineer. Acidation of a pump or pump intake screen shall be done in a manner described under subd. 1.

(c) *Physical conditioning.* Wells may be physically conditioned using any of the following methods:

1. 'Blasting.' When using explosives to increase or recover the yield of a well, the explosive charge shall be set at least 10 feet below the bottom of the well casing pipe, which shall be filled with water or sand. A licensed water well driller shall supervise blasting work, which shall be performed by a blaster certified by the department of safety and professional services according to the requirements specified in ch. SPS 307. The well driller shall submit a report of results of the blasting within 30 days following the work on a well construction report form.

2. 'Hydrofracturing or hydroflushing.' Hydrofracturing or hydroflushing of an aquifer by injecting potable chlorinated water into a crystalline bedrock formation well under high pressure is allowed. Clean washed inert, nontoxic material such as sand may be added to the water for the purpose of holding the joints and fractures open after the pressure is reduced. Hydrofracturing or hydroflushing may only be performed under the supervision of a licensed water well driller. The upper packer may not extend up into the bottom of the well casing pipe nor higher than 40 feet below the ground surface. Hydrofracturing or hydroflushing in limestone or dolomite formations may be undertaken only after prior department notification. The well driller shall submit a report of the results of the hydrofracturing or hydroflushing no later than 30 days after completion of the work on a form specified by the department.

3. 'Mechanical brushing.' A well may be mechanically brushed to loosen material attached to the inside of a casing, screen, or open drillhole.

(2) BATCH CHLORINATION. All of the following requirements apply to the batch chlorination of a water system by a well driller or well constructor:

(a) The entire water system shall be thoroughly disinfected with a chlorine solution having a concentration of at least 100 mg/1, prepared according to Table D.

(b) The volume of chlorine solution shall be equal to or greater than the volume of water standing in the well.

(c) The chlorine solution shall be brought into contact with the entire inside of the well casing pipe by continuous circulation from the water system.

(d) A contact time of at least 12 hours shall be provided for the disinfectant.

(e) The well and water system shall be thoroughly flushed.

NR 812.23 Driven point wells. Driven point wells are typically constructed in sandy soil areas with a high water table and groundwater in these areas is very susceptible to contamination. If a driven point well is constructed, the well driller or well constructor shall ensure that all of the following requirements are met:

(1) LOCATION. A driven point well shall be constructed to meet the location requirements and minimum separation distances specified in s. NR 812.08, and may not be constructed in a floodway.

(2) MATERIAL. Well casing pipe and screens used for driven point wells shall meet the requirements specified in s. NR 812.11 (6) and (11).

(3) FINAL CASING HEIGHT. The final height of a driven point well shall comply with s. NR 812.12 (12).

(4) MINIMUM DIAMETER. The minimum diameter of a driven point well is 1-1/4 inches.

(5) DEPTH OF CASING. The well drive pipe, not including the screen, of a driven point well shall extend to a depth of 25 feet or to a depth 10 feet below the static water level in the well, whichever is greater.

(6) FROST PROTECTION. Driven point wells, when protected against freezing, may be installed with a protective outer sleeve below frost depth. When installed in this manner, the top of the annular space between the well and the protective sleeve shall be sealed watertight with a sanitary well seal.

(7) PUMP INSTALLATION. Pump installations for driven point wells shall be completed according to s. NR 812.32.

(8) SCREEN REPLACEMENT. Screen replacement is considered new well construction and shall meet all the requirements of this chapter. Screens may not be replaced on driven point wells that do not comply with the location requirements of this chapter.

(10) STARTER DRILLHOLES. Starter drillholes not exceeding 10 feet deep may be constructed to facilitate driving the pipe. If a starter drillhole is constructed, the annular space

shall be sealed using the materials and methods specified in s. NR 812.13 (8) following completion. The temporary outer casing shall be removed if possible.

(11) FLOWING WELLS. The construction of a flowing driven point well shall meet the requirements specified in s. NR 812.15 (1).

NR 812.24 Dug type well design and construction. The department discourages the use of dug wells because they often pose a safety hazard and a threat to groundwater quality. Dug wells may only be constructed with the written approval of the department. A well driller or well constructor shall ensure that a dug well is constructed to meet the requirements of the approval and all of the following requirements:

(1) CURBING WALL.

(a) *Depth.* The curbing wall of a dug well shall be watertight to a depth of 25 feet below the established ground surface, or 10 feet below the top of the water table when the water table is encountered more than 15 feet below the ground surface. The curbing wall through the intake area shall be constructed to withstand any external pressure to which it may be subjected and shall be seated firmly enough to prevent settling.

(b) *Concrete curbing wall.* A concrete curbing wall shall be circular and at least 6 inches thick with concrete placed so as to be free from voids. The concrete mixture shall conform to the requirements of s. NR 812.20 (1). The curbing wall shall be reinforced vertically and horizontally with 3/8-inch metal rods on 12-inch centers. Rods shall overlap by 12 inches and be staggered, but the overlap may not occur at construction joints. The curbing wall shall be poured in one operation. There may not be a construction joint within 10 feet of the ground surface. Construction joints shall be left rough and shall be washed and brushed with neat cement grout before pouring of concrete is continued, if possible.

(c) *Steel curbing wall.* A steel curbing wall shall have a thickness of at least 1/4 inch and be assembled with welded joints.

(d) *Curbing wall installation.* The curbing wall shall be constructed at the surface and carried down by excavating from the interior. If wood forms are used on the exterior of a concrete curbing wall, they shall be removed before the curbing is lowered. Exterior wood forms may not be used below the ground surface. Metal forms may be left in place.

(e) *Annular opening*. The opening between the face of the excavation and the curbing wall shall be filled with clean clay slurry.

(f) *Upper terminal*. The curbing wall shall extend at least 12 inches above the established ground surface. The ground shall be graded up around the curbing wall to a height of at least 6 inches above the ground surface so surface water will flow away from the well.

(2) DUG WELL COVER. The cover of the well curbing shall be made of reinforced watertight concrete at least 5 inches thick and of a diameter large enough to overlap the curbing wall by at least 2 inches. A drip groove shall be provided within one inch of the outer edge of the underside of the cover. The cover shall be free from joints. A pump installation access sleeve comprising a section of steel well casing pipe conforming to s. NR 812.11 (6) shall be installed in the cover at the time of pouring the concrete to fabricate the cover and shall terminate at least 12 inches above the top of the cover. The top of the cover shall be sloped to drain away from the access sleeve. A manhole, if installed, shall be provided with a 4-inch high metal curb equipped with an overlapping metal cover, the sides of which extend downward at least 1 1/2 inches. A tight joint shall be provided between the top of the curbing and the cover using a nontoxic plastic sealing compound. The manhole cover shall be locked or bolted in place to prevent entrance of water and to be safe from vandalism and accidents.

(3) EQUIPMENT LOCATION. All pump piping, including the pump discharge or suction pipe, shall extend watertight through an access sleeve in the dug well cover.

NR 812.25 Springs. The use of a spring as a source of potable water shall comply with all of the following requirements:

(1) The placement or driving of a casing pipe into an undeveloped spring in a location easily accessible to the public regardless of the intended use of the spring water is prohibited.

(2) The unprotected nature of springs subjects them to wide fluctuations in water quality. The department discourages their use as a source of potable water. Springs vary from the standpoint of sources, locations, surrounding land uses, and elevation. Each spring considered for use as a source of potable water shall be evaluated by the department prior to use as a potable source. Development of a spring as a source of potable water may be approved only after a department evaluation and approval under s. NR 812.09 (4) (i) and sub. (3).

(3) The department may approve using a spring as a source of potable water only if the spring meets all of the following requirements:

(a) *Location.*

1. The area surrounding the spring to a distance of at least 100 feet laterally and 50 feet downgrade and the area immediately upslope from the spring to a point beyond the crest of the slope or to a distance of at least 200 feet upslope from the spring is not used for any activity, including human habitation, that may contaminate the spring.

2. The spring outlet is at least 2 feet above the regional flood water level.

3. The spring water flows from an underground source having enough overburden so that a horizontal plane extending back into the slope of the hill 100 feet will be at least 25 feet below the ground surface.

4. The spring meets the minimum separation distance requirements from potential contamination sources specified in s. NR 812.08.

(b) *Construction.* The spring outlet shall be completely protected against the entrance of surface water runoff, insects, rodents, and contaminants and shall be constructed to meet all of the following requirements:

1. A poured concrete box structure reinforced with 3/8-inch metal bars each way shall be constructed to house the spring outlet. This spring box shall meet all of the following minimum construction requirements:

a. Five-inch thick walls and roof with no cracks or holes, except for the overflow pipe in the wall and the access openings in the roof.

b. A width of 4 feet, with a 24-square foot cross section.

c. A 20-inch diameter round, or a 20-inch square access opening in the roof with a 4-inch thick concrete curbing wall that extends 8 inches above the roof.

d. An overlapping, tight-fitting, shoebox-type cover with 4-inch high skirted sides, constructed from welded sheet steel, to cover the access opening.

e. A 4-inch diameter or larger steel pipe sleeve, comprising a section of well casing pipe conforming to s. NR 812.11 (6) extending through the roof to a point at least 12 inches above the roof for the passage of the pump suction and discharge pipe or a service pipe from a pressure tank. The steel pipe sleeve shall be provided with a one-piece top plate sanitary well seal.

f. An overflow pipe with a screened outlet that terminates at least 2 pipe diameters above the maximum water level at its discharge point.

2. Buried discharge pipe from the spring, from a pump or any service pipes from a pressure tank shall be maintained under positive gauge pressure at all times.

3. When the pump, pressure tank, or both, are installed above the spring outlet box, an insulated housing shall be provided for frost protection.

(c) *Water quality*. The spring shall be capable of producing water that is continuously free from coliform bacteria and free of contaminant levels in excess of the standards specified in s. NR 812.06.

NR 812.26 Well and drillhole filling and sealing.

(1) APPLICABILITY. The requirements of this section apply to all wells and drillholes not regulated under ch. NR 132 or s. NR 141.25. An individual who fills and seals a well or drillhole shall complete the work in accordance with all of the requirements of this section.

(2) PROTECTION OF GROUNDWATER QUALITY. The filling and sealing of noncomplying, unused wells or wells with contaminant levels in excess of the standards specified in s. NR 812.06 or drillholes and noncomplying water systems is a crucial step in the protection of the local groundwater quality. Wells or drillholes, especially those with structural defects, may act as conduits for the vertical movement of contamination from or near the ground surface into the groundwater or from one aquifer to another.

(3) LICENSE REQUIREMENT. An individual who fills and seals a well shall be a licensed water well driller or licensed pump installer and an individual who fills and seals a heat exchange drillhole shall be a licensed heat exchange driller, except that a license is not required for any of the following individuals provided all other requirements of this section are met:

(a) An individual who is employed by a licensed water well driller, licensed pump installer or a person registered as a business to perform well drilling or pump installing may fill and seal a well.

(b) An individual who is a water system operator certified under s. 281.17 (3), Stats., and the well is within the service area of the local governmental water system for which the individual works may fill and seal a well.

(c) An individual who is employed by a licensed heat exchange driller or a person registered as a business to perform heat exchange drilling may fill and seal a heat exchange drillhole.

(d) An individual who is filling and sealing a drillhole that was not constructed to obtain groundwater or install a heat exchange loop.

(4) CRITERIA FOR FILLING AND SEALING.

(a) A well or drillhole owner shall hire an individual that meets the license requirements of sub. (3) to fill and seal a well or drillhole in any of the following situations:

1. The well water is contaminated with biological, bacteriological, viral, or parasitic agents and 3 attempts at batch chlorination by a well driller or pump installer fail to eliminate the problem.

2. The well or drillhole poses a hazard to health or safety, or to groundwater.

3. The well or heat exchange drillhole construction or location does not comply with the minimum standards of this chapter.

4. Except as provided in subd. 5., the well has not been used for any water supply purpose for more than 90 days.

5. The well is a seasonal well or high capacity irrigation well that has not been used for any water supply purpose for more than 3 consecutive years.

6. The heat exchange drillhole will not be used as part of the heat exchange system.

7. The pump installation is not operational, or it does not comply with the requirements of this chapter.

(b) The department may require a well or drillhole owner to fill and seal a well or drillhole in any of the following situations:

1. The well or drillhole is required to be filled and sealed under par. (a).

2. The well water contains contaminant levels in excess of the standards specified in s. NR 812.06.

3. The well or drillhole was not constructed by an individual meeting the license requirements of s. NR 812.10 (1) or 812.151 (1).

(c) A well driller or well constructor shall, no later than 30 days after receiving notice from the department, fill and seal a well that the well driller or well constructor constructed or reconstructed, in any of the following situations:

1. The well construction or location does not comply with the minimum standards of this chapter at the time the well was constructed.

2. The drillhole is an unsuccessful attempt to construct or reconstruct a well.

(d) A heat exchange driller shall, no later than 30 days after receiving notice from the department, fill and seal a heat exchange drillhole that the heat exchange driller constructed, in any of the following situations:

1. The heat exchange drillhole construction or location does not comply with the minimum standards of this chapter at the time it was constructed.

2. The drillhole is an unsuccessful attempt to construct or reconstruct a heat exchange drillhole.

(e) Any person who constructs a drillhole that is not a well or heat exchange drillhole shall fill and seal the drillhole at the completion of drilling and sampling activities.

(f) The department may require any person who has filled and sealed a well or drillhole using a method or material or in a manner not in compliance with this section to take corrective action so that the well or drillhole is filled and sealed in a complying manner.

(5) GENERAL FILLING AND SEALING REQUIREMENTS.

(a) *Filling and sealing prior to construction or demolition.* Unless exempted under s. NR 123.23, any well or drillhole removed from service shall be filled and sealed prior to any demolition or construction work on the property.

(b) *Removal of obstructions prior to filling and sealing.* All debris, pumps, piping, ungrouted liner pipe, and any other obstruction known to be in the well or drillhole shall be removed if possible before the well or drillhole is filled and sealed. When a pump is stuck within the well, a reasonable attempt shall be made using the best available technology to pull it out. If the pump cannot be pulled, a tremie pipe shall be placed in the well to a depth just above the top of the pump and neat cement grout shall be pumped in to entomb the pump and fill and seal the entire well.

(c) *Circulation of drilling mud in fractured formations*. In a highly fractured or highly permeable geologic formation, sodium bentonite drilling mud may be circulated in the drillhole or in the well prior to the filling and sealing procedures.

(d) *Use of a tremie pipe.* The sealing material to be used to fill and seal a well or drillhole greater than 3 inches in diameter shall be placed through a tremie pipe or by means of a dump

bailer except when bentonite chips or bentonite pellets are used. Tremie pipe shall meet the requirements specified in s. NR 812.11 (2). The bottom end of the tremie pipe shall be submerged in the filling and sealing material as the grouting proceeds.

(e) *Wells or drillholes with inadequate grouting or sealing of the annular space.* Wells or drillholes with inadequate grouting or sealing of the annular space outside the well casing pipe or liner shall be filled and sealed. Techniques are situation dependent and may include reaming a new annular space outside the well casing pipe, use of pressure grouting methods, or perforation of the well casing pipe. When perforation of the well casing or liner pipe is undertaken, it shall be done in accordance with the requirements specified in par. (i).

(f) *Termination of filling and sealing material.* The well casing pipe and filling and sealing material may be terminated as much as 3 feet below the ground surface or to a depth below any future building foundation at the time of the filling and sealing procedure.

(g) *Perforation of casing or liner.* Well casing or liners with ungrouted annular spaces that cannot be removed from the well or drillhole shall be perforated or ripped in place prior to filling and sealing. When an ungrouted casing or liner is perforated or ripped in place prior to filling and sealing, it shall be completed in accordance with all the following procedures:

1. The casing pipe or liner shall be perforated using projectiles fired perpendicular to the length of the string of pipe. The perforations shall extend completely through the casing or liner pipe. As an alternative, the casing pipe or liner may be vertically ripped.

2. Four perforation shots or one rip shall be provided for each 5 feet of casing or liner.

3. Each perforation shot shall be a minimum of 0.4 inches in diameter. Each rip shall have a minimum width of 0.25 inches and a minimum length of 12 inches.

4. The orientation of each successive perforation shot or rip shall be rotated by 90 degrees along the string of pipe.

5. After the well casing or liner has been perforated or ripped, the well shall be filled completely with neat cement from the bottom up to the ground surface. The well shall be filled both inside and outside the string of casing or liner pipe using a pressure grouting method in accordance with the requirements specified in s. NR 812.20.

(h) *Well or drillhole casing pipe.* Except as provided under par. (i), (j), or (k), the well casing pipe or drillhole casing pipe shall be left in place when a well or drillhole is filled and sealed. When the well or drillhole casing pipe is removed under par. (i), (j), or (k), the well or

drillhole shall be completely filled and sealed with the sealing material as the well casing pipe is pulled or before it is pulled. Any concrete or neat cement grout that settles in the well or drillhole when the well or drillhole casing pipe is removed shall be replaced.

(i) *Dry drillholes*. Well casing pipe may be removed from a dry drillhole and reinstalled in a well on the same property within 30 days of original drillhole construction.

(j) *Reconstruction ordered by the department*. Well casing pipe may be removed from a well or drillhole as part of reconstruction ordered or requested by the department. The well casing pipe may only be reinstalled on the same property if the reconstruction takes place no later than 120 days after the original construction.

(k) *Dewatering wells or drillholes*. Well casing pipe may be removed from a dewatering well or a drillhole. The removed well casing pipe may only be reused for dewatering wells.

(L) *Gravel packs*. When a well has a gravel pack that extends up to or within 20 feet of the ground surface, at least the top 20 feet of the gravel pack shall be jetted out or removed in some other manner. Once the gravel pack has been removed, the open annular space shall be filled and sealed with neat cement grout or concrete applied with a pressure method injected through a tremie pipe.

(m) *Well pits*. When a well terminating in a pit is filled and sealed, the pit shall also be filled and sealed, except when the pit is an alcove or if the pit will only be used for the purpose of housing valves and the pit complies with s. NR 812.36 (1). The filling of a well pit shall meet all of the following requirements:

1. All water system features shall be removed from the pit prior to filling and sealing.

2. The floor of the pit shall be perforated with several holes.

3. One wall of the pit shall be knocked out or perforated with serveral holes.

4. The pit shall be filled and sealed with clean native soil less permeable than the soil surrounding the pit.

(n) *Nonpressurized conduits*. When wells having nonpressurized conduits are filled and sealed, the basement end of the conduit shall be permanently sealed with a watertight cap or seal.

(6) FILLING AND SEALING MATERIALS AND METHODS.

(a) *General*. Once obstructions have been removed from a well or a drillhole, the well or drillhole shall be filled and sealed, from the bottom up with the use of a tremie pipe, except

where the use of a tremie pipe is specifically exempted. As allowed in this section, all materials used to fill and seal wells and drillholes shall meet the specifications of s. NR 812.11(15).

(b) *Use of bentonite chips or pellets*. Bentonite chips or pellets may be used to fill and seal wells and drillholes, subject to all of the following restrictions:

1. Bentonite chips may not be used for wells and drillholes less than 3 inches in diameter.

2. The total depth may not be deeper than 500 feet and the number of feet of standing water in the well or drillhole may not be more than 350 feet.

3. Bentonite chips or pellets may not be used for any well or drillhole filled with drilling mud or bentonite slurry.

4. Any bentonite chips or pellets placed below the water table shall be screened and poured in a manner that prevents bridging.

5. The depth of bentonite chips or pellets shall be monitored during the filling process, at a minimum of once every calculated 10 bags, to ensure the bentonite chips or pellets are not bridging in the well or drillhole. Any bridge of the bentonite chips or pellets shall be removed.

6. After installing bentonite chips or bentonite pellets, clear water obtained from an uncontaminated source shall be poured into the well to hydrate the bentonite chips. Water shall be introduced until the water level rises to the top of the well casing and the well will not accept any additional water at the time the individual who performs the filling and sealing operation leaves the site.

(c) *Wells completed in unconsolidated formation.*

1. Drilled wells and driven point wells larger than 3 inches in diameter shall be filled and sealed with neat cement grout, sand-cement grout, concrete, bentonite chips, or bentonite pellets.

2. Drilled wells and driven point wells less than or equal to 3 inches in diameter shall be filled and sealed with neat cement grout poured or pumped down the drive pipe or drillhole or by poured bentonite pellets. The use of a tremie pipe is not required.

(d) *Drillholes completed in unconsolidated formations.*

1. Drillholes less than 3 inches in diameter that extend below the water table shall be filled and sealed with bentonite pellets, or neat cement grout.

2. Drillholes less than 3 inches in diameter that do not extend below the water table may be filled and sealed with granular bentonite.

3. Drillholes 3 inches in diameter or greater shall be filled with drilling mud, cuttings, bentonite pellets, or bentonite chips to fill and seal the drillhole up to 10 feet below ground surface. From the existing ground surface to 10 feet below grade, the drillhole shall be filled with bentonite chips or pellets and hydrated with clear water obtained from an uncontaminated source.

4. The top 18 inches near the surface may consist of asphalt, concrete, sand and gravel base coarse, or native soil. Sealing material in drillholes completed in agricultural areas may be terminated 30 inches below the ground surface and clean native soil may be placed on top of the settled sealing material to avoid interference with agricultural activities.

(e) *Wells completed in bedrock formations.*

1. Wells completed in bedrock formations shall be filled completely and sealed from the bottom up with neat cement grout, sand-cement grout, concrete, bentonite chips, or pellets except bentonite chips are not allowed for wells and drillholes less than 3 inches in diameter.

2. Chlorinated sand-free pea gravel may be used to fill and seal an uncontaminated bedrock well deeper than 250 feet. Pea gravel may be poured without the use of a tremie pipe provided the well is sounded at 50-foot intervals to prevent bridging. When using pea gravel, the well shall be filled from the bottom up to 20 feet below the bottom of the casing pipe, or up to the 250-foot depth, whichever is deeper.

3. When a well extends through the Maquoketa Shale formation, a neat cement grout, concrete, or bentonite chip or pellet plug at least 40 feet thick shall be placed and centered at the contact surface between the Maquoketa Shale and adjacent geologic formations, both above and below. When a well extends through the top of the uppermost Cambrian Sandstone formation or the top of the Eau Claire Formation of the Cambrian Sandstone, a neat cement grout, concrete, or bentonite chip or pellet plug at least 40 feet thick shall be placed and centered at the upper formation boundary whenever these layers are present in the open bedrock drillhole.

(f) *Drillholes completed in bedrock formations.* Drillholes completed into bedrock formations shall be filled and sealed from the bottom up with neat cement grout, sand cement grout, bentonite chips, or bentonite pellets except bentonite chips are not allowed for wells and drillholes less than 3 inches in diameter.

(g) *Dug and bored wells.*

1. Dug or bored wells shall have the cover removed and the top five feet of curbing or concrete wall removed. Rock curbing may be caved into the drillhole as the well is being sealed only if done in a manner to prevent bridging. The well shall be filled and sealed using clean clay or silt, clean native soil, bentonite chips or pellets, concrete, sand-cement grout, or neat cement grout if constructed in unconsolidated formations.

2. Dug or bored wells constructed partially or completely into bedrock shall be filled and sealed with neat cement grout, sand-cement grout, concrete, or bentonite chips or pellets to a point at least two feet above the top of the bedrock. The remainder of the well or drillhole may be filled and sealed using any of the materials listed in par. (c) 1.

3. Dug or bored wells 18 inches in diameter and smaller shall be filled and sealed by means of a tremie pipe, except when bentonite chips or pellets are used or when clean clay or silt or clean native soil is used and the dug or bored well is 25 feet deep or less.

(h) *Heat exchange drillholes*. The filling and sealing of heat exchange drillholes shall be completed according to all of the following requirements:

1. If the loops for a heat exchange drillhole have not been grouted in place and can be removed from the drillhole, the loops shall be removed before filling and sealing.

2. If the loop for a heat exchange drillhole has been grouted into the drillhole and cannot be removed, the loop shall be evacuated of all fluids and cement or bentonite grout shall be pumped into the loop. The loops may be left in place after grouting or may be cut off below ground surface.

(i) *Flowing wells*. Materials for filling and sealing a flowing well shall be neat cement or neat cement with approved additives to increase the grout density and shall meet the requirements of s. NR 812.22 (15). The flow of water at the ground surface from a flowing well shall be reduced or stopped prior to filling and sealing using one of the following methods:

1. Centering a tremie pipe in the drillhole or casing within an inflatable packer.

2. Extending the well casing to a height above the piezometric surface.

3. Placing chlorinated sand-free pea gravel in a bedrock well from the bottom of the well to no higher than 40 feet from the bottom of the casing pipe.

4. Pumping water out of a nearby well completed in the same flowing formation.

(7) WELL AND DRILLHOLE FILLING AND SEALING REPORTS.

(a) A well and drillhole filling and sealing report shall be filed with the department no later than 30 days after the well or drillhole is filled and sealed.

(b) The filling and sealing report shall be filed with the department electronically by the person performing the filling and sealing work and shall include all of the following information:

1. A complete and accurate description of the location of the well or drillhole that was filled and sealed.

2. The materials and method of filling and sealing,

3. The construction of the well or drillhole.

4. The geologic features of the well or drillhole.

5. The Wisconsin Unique Well Number of the well, if known.

6. The presence of any unused wells or drillholes that are not filled and sealed for which they have knowledge.

SECTION 107. NR 812.27 (intro.) is created to read:

NR 812.27 (intro.) A pump installer shall perform pump installing in accordance with all of the following requirements:

SECTION 108. NR 812.27 (1) is repealed and recreated to read:

NR 812.27 (1) LICENSE REQUIREMENT. An individual who performs pump installing is required to be a licensed pump installer except that a license is not required for any of the following individuals provided all other requirements of this subchapter are met:

(a) An individual who is employed by a licensed pump installer or a person registered as a business to perform pump installing.

(b) An individual master plumber licensed under ch. 145, Stats., may install a pressure tank.

SECTION 109. NR 812.27 (3) and (5) are amended to read:

(3) PITS. Existing pits and ~~subsurface pumprooms~~alcoves shall comply with the conditions of a department approval to construct the pit or alcove, or to the minimum standards of s. NR 812.42 (2).

(5) DISINFECTION AND WELL SEALS. The pump installer shall disinfect any potable well and water system according to s. ~~NR 812.22 (4) and (5)~~NR 812.41 (1) and (2) upon completion of the original pump installation and thereafter, anytime the well is entered for the purpose of measuring or diagnosing any feature or problem with the well or after the well is entered for rehabilitation, redevelopment, reconditioning or cleaning or if the well is entered for the purpose of installing, replacing or repairing any equipment located within the well. Following disinfection, the disinfectant shall be flushed according to s. ~~NR 812.22 (5)~~NR 812.41 (2). The disinfection and flushing shall be completed before the system is placed into service. The pump installer shall seal or cover the well with ~~an approved~~ a vermin-proof cap or seal approved for use under s. NR 812.091. The pump installer may designate the owner, the property lessee, or any other person to flush the system.

SECTION 110. NR 812.27 (5) (Note) is repealed.

SECTION 111. NR 812.27 (6) is repealed and recreated to read:

NR 812.27 (6) WATER SAMPLE COLLECTION, ANALYSIS AND REPORTING. The pump installer shall collect water samples, submit them to a certified laboratory for analysis, and provide the test results as specified in s. NR 812.46.

SECTION 112. NR 812.27 (7) is amended to read:

NR 812.27 (7) NOTIFICATION OF CONTAMINATED WELLS. Pump installers shall notify ~~a well owner if the pump installer becomes aware that the water from the well contains contaminants~~ the well owner as soon as practicable, but no later than 48 hours, after the pump installer is informed that the water from the well contains contaminant levels in excess of the ~~primary~~ standards specified in ~~ch. NR 809~~ s. NR 812.06.

SECTION 113. NR 812.27 (8) is repealed and recreated to read:

NR 812.27 (8) BACTERIA POSITIVE WELLS. Pump installers shall return to the well site to diagnose and attempt to correct a problem when an initial sample from a potable well is positive for coliform bacteria. Corrective action should be taken no later than 10 days after the pump installer is informed of a total coliform bacteria-positive result or prior to the well being placed

into service, whichever is later. After corrective action the well shall be disinfected and flushed in accordance with s. NR 812.41 and sampled in accordance with s. NR 812.46 (1).

SECTION 114. NR 812.27 (9) (title) and (10) (title) are created to read:

NR 812.27 (9) (title) BACKFLOW PREVENTION.

(10) (title) NONCOMPLIANCE.

SECTION 115. NR 812.27 (11) is amended to read:

NR 812.27 (11) OPEN ANNULAR SPACE. A pump installer may not install a pump in a well having an open annular space that extends deeper than twice the depth of the pitless adapter or pitless unit. When an annular space is open to a depth greater than this depth, the pump installer shall inform the well driller so that the well driller knows to return to the job site and seal the annular space according to s. NR 812.20. The pump installation shall not be completed until the well driller has resealed the annular space. If the annular space is open to a depth less than or equal to twice the depth of the pitless adapter, the pump installer may seal the open annular space with an approved granular bentonite hydrated with clear water from ~~a known safe and~~ an uncontaminated source.

SECTION 116. NR 812.27 (12) is created to read:

NR 812.27 (12) WELL CASING PIPE DEPTH MEASUREMENT.

(a) When required to measure well casing pipe depth by this chapter or at the request of the department, the pump installer shall document the measurement on a form specified by the department and submit the form to the well owner and the department no later than 30 days after performing the measurement.

(b) The pump installer shall provide complete and accurate information on the form, including well owner information, well location, well casing pipe depth, total well depth, and distances to potential contaminant sources.

SECTION 117. NR 812.28 and (Note) are amended to read:

NR 812.28 **Pump installation equipment and supply pipe.** ~~The department may prohibit the use of any water supply equipment if the department finds there is substantial~~

~~evidence that the equipment poses a significant hazard to safe drinking water or the groundwater. The department shall state its decision and conclusions in writing to the manufacturer, the licensed pump installers and the industry representatives including the Wisconsin Water Well Association and the Wisconsin Pump and Well Suppliers Association. Unless otherwise specified, the prohibition of the use of any water supply equipment will take effect 12 months after the initial prohibition notice.~~ Pump installation products and equipment may not be used unless they are approved for use under s. NR 812.091. Pump discharge and supply piping shall conform to the ~~specifications~~requirements specified in s. NR ~~812.17~~812.11 for steel pipe or shall conform to the requirements in the "Pipe and Tubing for water services and private water mains" table in s. SPS 384.30, except that Type M copper pipe may not be installed underground. Pipe used for year-round installations shall be protected from freezing. Lead-based solder for pipe connections may not be used. ~~The department recommends that galvanized pipe not be used when the water quality is known to be corrosive.~~ Limitations on the use of plastic pipe are found in s. SPS 384.30. Plastic pipe may not be used for buried pipe in soils known to be contaminated with volatile organic chemicals. Plastic pipe may be used as drop pipe installed within a well or for discharge piping between the well and the building served, provided it meets ~~s. SPS 384.30,~~ standards specified in s. SPS 384.30 and has a minimum pressure rating of 150 pounds per square inch. When plastic pipe extends through the seal of a well with an above-ground discharge, the portion of the plastic pipe extending above-ground from the well shall be protected from sunlight or the plastic pipe used shall be of the type with inhibitors recommended for use in direct sunlight.

Note: The department recommends the installation of torque arresters on the drop pipe for submersible pumps. The department recommends that galvanized pipe not be used when the water quality is known to be corrosive.

SECTION 118. NR 812.29 (1) and (3) are amended to read:

NR 812.29 (1)~~For wells constructed after February 1, 1991,~~Except as provided in sub. (3), a pump ~~installation~~installer shall ~~be completed such~~ ensure that the watertight well casing pipe for ~~all wells, except those located in a floodplain, shall terminate~~a well terminates at least 12 inches above the established ground surface, above a pumphouse or building floor or above any concrete or asphalt platform surrounding the well casing.

(3) For a ~~wells~~well in a ~~floodplains~~floodplain, the top of a well and an overflow outlet from a flowing well shall terminate at least 2 feet above the regional flood elevation. ~~Pits~~A pit or alcove may not be installed to enclose a well or pump installation.

SECTION 119. NR 812.29 (4) is repealed.

SECTION 120. NR 812.29 (5) is repealed and recreated to read:

NR 812.29 (5) When a well terminates in a walkout basement meeting the requirements of s. NR 812.08 (2) (d), the top of the well shall terminate a minimum of 12 inches above the basement floor.

SECTION 121. NR 812.30 (1) is amended to read:

NR 812.30 (1) REQUIREMENTS~~ AND DEPARTMENT APPROVAL CRITERIA~~. ~~New wells~~A new well shall be sealed or covered with ~~an approved~~a weather and vermin-proof compression type well cap or seal approved for use under s. NR 812.091 and installed on or in the top of the well casing pipe. ~~Examples are depicted in figures 23 and 24. All well cap or seal approvals shall be based on materials of construction, method of venting, effectiveness of gasket, ease of removal for inspection of the inside of the well and method of attachment to the well casing pipe. Stud bolts are preferred. The nuts and bolts shall be made of material such that corrosion is minimized. A list of approved models is available from the department.~~

SECTION 122. NR 812.30 (1) (Note) is repealed.

SECTION 123. NR 812.31 is amended to read:

NR 812.31 **Pitless adapters and pitless units.** Pump installers or persons installing pumps shall use pitless adapters or pitless units approved ~~by the department~~for use under s. NR 812.091 to make subsurface connections to wells. ~~Nonpressure~~Nonpressurized conduits may not be used~~, unless a variance is granted by the department~~.

SECTION 124. NR 812.31 (intro.) (Note) and (1) are repealed.

SECTION 125. NR 812.31 (2) (a) and (c), (3) (a) (intro.) and 3., and (b) (intro.), (4) (a), (d), and (e), and (5) are amended to read:

NR 812.31 (2) GENERAL REQUIREMENTS. (a) A pitless subsurface pipe connection to a well casing pipe shall be made with ~~an approved~~a weld-on, clamp-on, bolt-on or bolt-through pitless adapter or with ~~an approved~~a pitless unit, except that a bolt-through adapter may only be installed for a well constructed with polyvinyl chloride well casing pipe that has a permanently attached well screen. A clamp-on, bolt-on or bolt-through pitless adapter may only be installed for a well that will serve a single family residence. Weld-on adapters or pitless units shall be welded or threaded to the well casing pipe according to sub. (3) or (4). All welding shall be performed in accordance with s. NR 812.18. A pitless adapter or pitless unit shall be installed according to any approval conditions and according to the manufacturer's instructions.

(c) An above-ground discharge shall be provided for all school and high capacity wells except that ~~an approved~~ a pitless unit or ~~an approved~~a weld-on pitless adapter may be installed if the welded or threaded joints are pressure tested for leakage using a packer and pressure gauge ~~as depicted in figure 29~~ or by a comparable testing procedure. The adapter or unit joints shall be tested and proven watertight under a pressure of not less than 14 psig. A soap and water solution shall be applied to welds to identify any leaks, and all leaks shall be repaired with additional welding prior to starting the pressure test. The pressure shall be maintained for at least 30 minutes. The pump installer shall notify the department at least 24 hours before testing, so that a department employee may witness the test.

(3) PITLESS UNIT CONNECTIONS TO STEEL WELL CASING PIPE. (a) When a well casing pipe is not terminated at the desired depth for the installation of ~~an approved~~a factory assembled pitless unit, the well casing pipe shall be cut off at the desired height, and the pitless unit may be

welded or threaded and coupled to the top of the well casing pipe by one of the following methods as depicted in Figure 1 of ch. NR 812 Appendix:

3. Welding a pipe nipple, having threads on one end, beveled on the other end and meeting the requirements ~~of~~specified in s. NR ~~812.17 (2)~~812.11 (6), to the cut off top beveled end of the well casing pipe and threading a full-length standard recessed coupling watertight to the threaded end of the unit and to the nipple. The top of the well casing pipe and the bottom of the pipe nipple to be welded shall both have beveled ends. If the pitless unit has female threads, the unit may be threaded watertight directly to the threaded end of the nipple.

(b) (intro.) When installing ~~an approved~~a factory assembled pitless unit, the following restrictions shall be followed:

(4) (a) Steel well casing pipe, pitless units or pitless adapters may not be welded after they are attached to thermoplastic well casing pipe. The thermoplastic coupling shall be threaded onto the pitless unit before it is solvent cemented to the top of the thermoplastic well casing pipe. ~~This is~~Pitless unit connections for thermoplastic well casing pipe are depicted in Figure ~~31~~2.

(d) The portion of the well casing pipe above a short length pitless unit shall be steel or thermoplastic well casing pipe meeting the requirements ~~of~~specified in s. NR ~~812.17~~812.11.

(e) When thermoplastic well casing pipe is extended above the ground surface, the thermoplastic pipe ~~may be contained in a pumphouse or in an oversized steel pipe extending from below the frost depth to the top of the thermoplastic pipe~~ shall be of the type with inhibitors recommended for use in direct sunlight or shall be contained in a pumphouse or in an oversized steel pipe extending from below the frost depth to the top of the thermoplastic pipe.

(5) PITLESS RECEIVER TANKS. Pitless receiver units shall be approved ~~by the department~~for use under s. NR 812.091.

(a) Steel buried tanks that are part of ~~an approved~~a pitless unit shall have a minimum wall thickness of 1/4-inch and shall have an identifying seal, label, or plate showing the manufacturer's name and model number.

(b) An approval under s. NR 812.09 shall be obtained for the installation of a buried pitless receiver tank having a gross volume greater than 1,000 gallons.

SECTION 126. NR 812.32 (1) (a) 2., and (c), (2) (a) 1. (Note), and 3. are amended to read:

NR 812.32 (1) (a) 2. Properly sized ~~so as~~ to provide the volume of water necessary, where obtainable, for an adequate water supply;

(c) Every pump shall be installed with an above-ground discharge ~~such as depicted in figure 32~~, an approved subsurface pitless adapter or pitless unit ~~such as depicted in figure 33~~ or an approved subsurface well casing pipe connection.

(2) (a) 1. **Note:** In areas especially prone to lightning strikes to wells having submersible pumps, the department will grant variances to the prohibition against ~~nonpressure~~nonpressurized conduits.

3. ~~Pressure~~Pressurized conduits may terminate at the end of a horizontal pipe entering a basement. Any unburied pump suction pipe in the basement not enclosed in a pressurized conduit shall be at least one foot above the basement floor. A pressure or ~~(~~box~~)~~ elbow may be used to extend the pressurized conduit to a point above the basement floor. Pressure or ~~(~~box~~)~~ elbows may be buried.

SECTION 127. NR 812.32 (2) (a) 5. is repealed.

SECTION 128. NR 812.32 (2) (b), (3), (5) (b) 2. a., b., c., and d., (6) (a), (7) and (9) (d) are amended to read:

NR 812.32 (2) (b) *Pump height*. The pump impeller or cylinder for offset pumps shall be located at an elevation at least one foot above the basement, ~~or~~ pit, or alcove floor.

(3) PUMP INTAKE SETTING. When a well is constructed in an unconsolidated formation, the pump intake shall be set at least 5 feet above the bottom of the well casing pipe or drive pipe casing or above the top of the screen. ~~This is depicted in figure 37.~~ When a pump is replaced and set to a greater depth in a well, an attempt shall be made to ascertain the well construction so this requirement can be made. The pump shall provide an adequate quantity of water, where obtainable, for the intended purpose of the well.

(5) (b) 2. a. A minimum 12 inch high concrete pump platform shall be poured surrounding the well casing pipe. The well casing pipe shall project at least one inch up into the pump discharge head ~~as depicted in figure 38A~~.

b. If the pump discharge head does not have enough recess to extend down over the well casing pipe at least one inch, a cast iron or steel subbase sanitary ring at least one inch thick shall

be bolted to the base of the discharge head and installed surrounding the well casing pipe. A compressible neoprene gasket shall be installed between the base of the discharge head and the sanitary ring or subbase unless the metal surfaces are machined. ~~This is depicted in figure 38L.~~ As an alternative a flange may be welded to the top of the well casing pipe ~~as depicted in figure 38C~~.

c. If a concrete pump platform is not to be poured surrounding the well casing pipe, a steel flange shall be welded watertight to the top of the well casing pipe. The base of the discharge head shall be bolted to the casing flange and a compressible neoprene gasket shall be installed between the 2. ~~This is depicted in figure 38D.~~

d. The well casing pipe may be enlarged above grade to accommodate the pump column flange, by fillet welding or threading a steel flange plate watertight to the top of the well casing pipe. A piece of larger diameter pipe meeting Table ~~V~~B requirements shall then be fillet welded watertight to the top of the flange plate. The pump discharge head shall then be installed as provided in subd. 2. a. to c.

(6) (a) *Pressurized.* Discharge lines from lineshaft turbine pumps that are maintained under system pressure at all times shall contain an air-vacuum relief valve preceding a check valve. A well vent shall be installed in the pump base. ~~This~~High capacity well pump installation is depicted in Figure ~~39~~3 of ch. NR 812 Appendix.

(7) HAND PUMPS.

(a) Hand pump heads shall be designed and fabricated so there are no unprotected openings, other than the spout, to the interior of the pump. The water spout shall turn downward and be closed on top. If a separate watertight port is provided for priming, it shall be sealed watertight when not being used. Unsealed openings may not exist in the pumpbase. If the pump is installed outside, a concrete crack-free watertight pump platform at least 6 feet in diameter~~, as depicted in Figure 40~~ shall be provided. The top of this platform may be at ground grade, but in any case the platform shall be mounded so that water does not accumulate around the well. If excess water flow from the pump spout is channelized, it shall be directed to a point at least 8 feet from the well with a drain pipe or watertight channel.

(b) Hand pumps shall be connected firmly to the well casing pipe by threading in small diameter well casing pipe or by bolting the pumpbase flange to a well casing pipe flange with a gasket to seal the top of the casing. ~~This is depicted in Figure 40.~~ Other types of hand pump

bases may be used if they meet the approval ~~criteria in s. NR 812.30 (1)~~requirements specified in s. NR 812.091 for vermin-proof caps and seals.

(9) (d) *Complying installations.* Illustrations of complying pump installations for flowing wells are shown in Figures ~~41~~4 to ~~43~~6 of ch. NR 812 Appendix.

SECTION 129. NR 812.33 (1) (b), (2) (intro), (b), and 4. e. are amended to read:

NR 812.33 (1) (b) *Pressure tanks larger than 1,000 gallons gross volume.* An approval shall be obtained for pressure tanks having a gross volume greater than 1,000 gallons. The department recommends that pressure tanks having a volume greater than 1,000 gallons be installed above ground. When approved, the tank shall be installed according to the requirements of par. (a). When tanks of this size are approved for burial, the head end of the tank shall be cradled in a basement wall or in the wall of an approved pit to provide access and shall be constructed to the specifications for pits described in s. NR 812.36 (2) to provide access to the head of the tank. The pit shall have other additional support cradles. ~~This is depicted in figure 44.~~ Pitless receiver tanks having a volume greater than 1,000 gallons may be installed without an access pit.

(2) NONPRESSURE STORAGE VESSELS. (intro.) Nonpressure storage vessels, designed as part of a potable water supply system, may not be ~~used~~ installed without approval from the department under s. NR 812.09. Approval is required regardless of whether or not there is a free-air gap in the water inlet line upstream of the vessel. Vessel approval is based on methods of construction and sanitary provisions. The installation of a surge tank is exempt from this approval requirement.

(b) *Reservoirs and elevated storage tanks.* A reservoir may be constructed to store water if it is constructed above the groundwater level and in accordance with this paragraph and Figure ~~44A~~7 of ch. NR 812 Appendix.

4. e. The roof shall be reinforced poured concrete at least 6 inches thick and shall extend at least 12 inches above established ground grade. An access manhole at least 20 inches in diameter or 20 inches square shall be constructed as an integral part of the roof. The manhole shall have a curbing wall extending at least 12 inches above the roof. The department recommends that the manhole shall be constructed entirely of 4-inch thick reinforced poured concrete, but may be fabricated of 1/4-inch steel or cast iron frame with a gasket and bolted

cover. The curbing shall be provided with a snug fitting, overlapping cover with a minimum of 3-inch wide skirted sides. The department recommends that the cover be constructed with welded sheet steel, but it may be constructed with reinforced poured concrete. Concrete shall be mixed according to the requirements specified in s. ~~NR 812.26 (7) (b) 2. or 812.36 (2) (b) 1~~NR 812.11 (15) (e).

SECTION 130. NR 812.34 is repealed and recreated to read:

NR 812.34 Sample faucets.

(1) A pump installer shall install a sample faucet in accordance with all of the following requirements:

(a) The sample faucet shall be installed at or upstream of the pressure tank and upstream of any water treatment equipment for collection of water samples directly from the well.

(b) The sample faucet shall be installed at least 12 inches above the floor, have a downturned spout, and be in an accessible location. All sample faucets shall be metal and shall have an inside diameter of at least 1/4 inch. The sample faucet shall have a smooth end. Threaded faucets and threaded drain valves may not be installed in place of a smooth end sample faucet even if the threads have been filed off. Petcocks may not be used as sample faucets. Any faucet used for recirculation shall be installed with a hose connection vacuum breaker.

(c) Sample faucets shall be installed in the pump discharge piping upstream of the pressure tank entry except in any of the following cases:

1. When a buried pressure tank, a pitless receiver tank or an above ground discharge unit is installed, the sampling faucet shall be installed immediately following the point of entry into the building or building basement.

2. When an approved above ground discharge unit is used and the pressure tank is in the basement, the sampling faucet shall be installed in the service pipe from the tank, at least 12 inches above the floor. The sampling faucet may be placed in the pump discharge line if there is no loss of air from the system when the faucet is opened.

(2) An entry point sample faucet shall also be installed for a non-community water system after treatment or chemical addition, if any, but prior to the distribution system for sample collection and compliance with the monitoring requirements of ch. NR 809. The entry point sample faucet shall meet all the requirements specified in sub. (1) (b).

SECTION 131. NR 812.36 (1), (2) (intro.), (b) 1., (c) 5., and (d) 2. are amended to read:

NR 812.36 (1) APPROVALS TO CONSTRUCT PITS. A pit structure that is completely or partially below the ground surface or below a building floor used for the housing of wells, offset pumps, pressure tanks, or heads of pressure tanks may not be constructed without prior written approval from the department under s. NR 812.09. ~~Subsurface well or pump rooms (alcoves) adjoining a basement are pits. Applications shall be submitted to the department on forms provided by the department.~~ Pits used only for the housing of valves are exempt from the requirements of this section except that a pit used for this purpose shall be watertight, may not be connected to a sewer, shall be drained to permeable soil or to the ground surface and may not be subject to flooding.

(2) SPECIFICATION FOR NEW PITS. (intro.) Pits shall conform to Figure ~~45~~8 of ch. NR 812 Appendix and all of the following minimum specifications:

(b) 1. 'Material.' The pit shall be constructed of reinforced poured concrete thoroughly puddled in place. The concrete shall be prepared ~~according to~~to meet the ~~specifications of~~requirements specified in s. NR ~~812.26 (7) (b) 2.~~812.11 (15) (e) or by using clear water and washed sand and gravel or crushed rock in the following proportions: 1 part cement, 2 parts sand, and 3 parts gravel. The water-cement ratio may not exceed 6 gallons of water per 94 pounds of cement. A ~~6 bag~~6-bag concrete mix per cubic yard with a 28-day design strength of at least 3,000 lbs. per foot and a slump test of no more than 3 inches may be used.

(c) 5. 'Exceptions.' A watertight, cast iron manhole frame and cover with a gasket may be substituted for a curbed manhole. When the pit is ~~a subsurface pumproom (alcove)~~an alcove adjoining a basement foundation, a watertight concrete plug may be substituted for a curbed manhole if the roof of the pit terminates in a walkway, breezeway, patio or porch, providing the pit is reasonably accessible.

(d) 2. ~~Pits adjoining basements (alcoves)~~ 'Alcoves.' ~~The subsurface pumproom pit~~An alcove may be drained to the basement floor if the pit floor slopes toward the basement and if the basement is adequately drained. If the basement is not adequately drained, a gravity drain shall be provided for the pit. The pit floor shall be one foot above the basement floor.

SECTION 132. NR 812.36 (2) (d) 2. (Note) is repealed.

SECTION 133. NR 812.36 (3) (b) (intro.), 1., and 5. are amended to read:

NR 812.36 (3) (b) *Construction specifications.* Driveway ramps shall conform to Figure ~~4~~59 of ch. NR 812 Appendix and all of the following minimum specifications:

1. '~~Nonpressure~~Nonpressurized conduit~~'~~.' If the well has a ~~nonpressure~~nonpressurized conduit, the pump installer shall evaluate the integrity of the ~~nonpressure~~nonpressurized conduit and its connection to the well casing pipe by performing a pressure test. If the ~~nonpressure~~nonpressurized conduit fails the pressure test, the ~~nonpressure~~nonpressurized conduit shall be eliminated and the installation shall be changed to a pitless connection in accordance with s. NR 812.42 (11) (e). Wells with nonpressurized conduits must be vented to the ceiling in the basement and shall have the pump cables enter through a conduit.

5. `Conduit for electrical cable~~'~~.' ~~Pump electrical cable shall be protected in a metal or plastic conduit. The conduit shall be threaded tightly into the well cap or seal or shall be sealed in an equivalent manner. If the electrical wires are buried beside the well, the bottom of the conduit shall extend below the floor of the driveway ramp and shall be sealed water tight.~~ Conduit for electrical wiring shall be protected and sealed to comply with s. NR 812.30 (5). If the conduit extends from the well seal to a basement, the end of the conduit shall be sealed ~~in~~ with a watertight, vermin-proof seal ~~manner~~.

SECTION 134. NR 812.36 (3) (b) 6. is repealed.

SECTION 135. NR 812.37 (1) and (2) (b) are amended to read:

NR 812.37 (1) SCOPE. This section applies to treatment of water for potable use in a private or non-community water system except for the disinfection ~~treatment~~, batch chlorination, and acidification prescribed in ss. NR 812.12, 812.22, and 812.41.

(2) (b) A water supply ~~to be treated for health related contaminants or~~ requiring approval under sub. (3) shall produce ~~bacteriologically safe~~ water free from coliform bacteria prior to treatment, unless the department determines that a ~~bacteriologically safe~~ water supply free from coliform bacteria is not available. ~~The water system owner or operator shall assure that the water supply remains bacteriologically safe after installation of a water treatment device~~. ~~Health related contaminants are those contaminants for which: primary drinking water standards are established~~

~~in ch. NR 809, public health groundwater quality standards are established in ch. NR 140, and health advisories are established on a contaminant-specific basis by the department~~.

SECTION 136. NR 812.37 (2) (b) (Note) is repealed.

SECTION 137. NR 812.37 (2) (d) (intro.), 1., 2, and 3. are amended to read:

NR 812.37 (2) (d) A ~~Water~~water treatment ~~devices~~device shall be installed by ~~a~~one of the following:

1. ~~DSPS licensed~~A plumber licensed under s. 145.06, Stats., if the device is installed ~~following~~downstream of the pressure tank~~;~~ or building control valve.

2. ~~Licensed~~A licensed pump installer if the device is installed ~~before~~upstream of the pressure tank~~; or~~ .

3. ~~Property~~A property owner ~~in a one-family building owned and occupied by the owner as their home or farm building, except where a DSPS licensed plumber is required by local ordinance~~who is exempt from the requirement for a plumbing license under s. 145.06 (4) (a), Stats.

SECTION 138. NR 812.37 (2) (d) 3. (Note) is created to read:

NR 812.37 (2) (d) 3. **Note**: Section 145.06 (4) (a), Stats., provides an exemption from the requirement for a plumbing license for, "plumbing work done by a property owner in a one-family building owned and occupied by him or her as his or her home or farm building, except where such license is required by local ordinance."

SECTION 139. NR 812.37 (2) (e) is repealed and recreated to read:

NR 812.37 (2) (e) Treatment for control of regulated contaminants in a non-community water system shall be considered only after the system owner demonstrates that none of the following alternatives are available or feasible:

1. Constructing a new well.

2. Reconstructing an existing well.

3. Connecting to an alternative water supply.

SECTION 140. NR 812.37 (2) (g) and (i) are amended to read:

NR 812.37 (2) (g) Unless otherwise stated in the department's installation approval, treatment devices requiring approval under sub. (3) shall be designed and installed to ~~assure control of~~treat all water provided by the water system. The department's installation approval may exclude treatment of water being supplied for certain uses including~~, but not limited to,~~ outside hose ~~bibbs~~bibs, fire protection systems, boilers used for space heating, turf sprinkler systems and non-food process water.

(i) All chemicals used for addition to a water system shall be ~~certified by NSF according to NSF Standard No. 60 or shall be~~ approved ~~by the department~~for use under s. NR 812.091.

SECTION 141. NR 812.37 (2) (i) (Note) is repealed.

SECTION 142. NR 812.37 (2) (j) and (k) are created to read:

NR 812.37 (2) (j) All products in contact with potable water shall be certified for compliance with NSF/ANSI Standard 61 or shall be approved for use under s. NR 812.091.

(k) Water treatment may not be installed in a private or non-community water system if the department has required the well to be filled and sealed under s. NR 812.26 (4) or has required use of the system to be discontinued.

SECTION 143. NR 812.37 (3) (a) and (b) are amended to read:

NR 812.37 (3) (a) The water treatment device ~~is intended to control bacteriologically unsafe water~~is installed for the purpose of controlling bacteria in a non-community water system.

(b) The water treatment device ~~is to~~will be installed on or within the well or pressure system, or when water treatment occurs within the well.

SECTION 144. NR 812.37 (3) (c) is repealed.

SECTION 145. NR 812.37 (3) (d) is amended to read:

NR 812.37 (3) (d) The water treatment device or treatment system ~~is intended to~~will control corrosion or ~~to~~will control, ~~or~~ remove or prevent contaminant levels in excess of primary

drinking water standards as specified under ch. NR 809, health advisories or action levels in a ~~noncommunity~~non-community water system.

SECTION 146. NR 812.37 (3) (e) and (f) are repealed.

SECTION 147. NR 812.37 (3) (g) is amended to read:

NR 812.37 (3) (g) Fluoride ~~treatment of~~ addition to a water system.

SECTION 148. NR 812.37 (3m) is created to read:

NR 812.37 (3m) INSPECTION REQUIREMENTS. Inspection of the existing well and pressure system for compliance with the construction and location requirements of this chapter is required prior to installation of a water treatment device for the purpose of controlling bacteria in a private water system. No person may install a water treatment device for the purpose of controlling bacteria in a private water system unless an inspection has been conducted that meets all of the following requirements:

(a) The inspection shall be conducted by a licensed water well driller or licensed pump installer.

(b) The inspection shall include a comprehensive visual inspection of the well and pressure system and a diligent search for the well construction report.

(c) The inspector shall report the results of the compliance inspection on the form specified by the department. The form shall be completed in full according to department instructions and shall be accurate. The inspector shall identify any corrective measures that would reduce the potential for bacteria to enter the well and pressure system.

(d) The inspector shall provide a completed inspection report and well construction report, if found, to the private water system owner. Use of the department form does not imply department approval of the well and pressure system.

SECTION 149. NR 812.37 (4) (a) and (b) are amended to read:

NR 812.37 (4) (a) In addition to the information required ~~in~~under s. NR 812.09 (2), the department may require the applicant to describe the proposed water treatment device; provide a sketch of the proposed installation; include ~~information on~~ results of an analysis of coliform

bacteria of a water sample taken from the water supply within 6 weeks of application ~~and~~; include results of an analysis of contaminants ~~intended~~ to be controlled by the water treatment device of water samples taken from the water supply at specified locations; and describe the proposed water quality monitoring, operating, and maintenance programs. Additional sampling and information may be requested depending on the nature of the contamination and other site specific conditions. Analysis of water samples ~~for bacteria shall be performed by a laboratory certified by DATCP under ch. ATCP 77 or the Wisconsin state laboratory of hygiene~~shall meet the requirements under s. NR 812.46 for private water systems and s. NR 809.76 for non-community water systems.

(b) The department may require operational procedures including installation of a sample faucet and an entry point sample faucet at specific locations, periodic sampling and analysis, device maintenance, and inspection provisions in its installation approval of a water treatment device.

SECTION 150. NR 812.37 (4) (c) is repealed.

SECTION 151. NR 812.37 (4) (d) and (e) 5. are amended to read:

NR 812.37 (4) (d) The department may require the water system owner or operator to shut off, ~~by pass~~bypass or disconnect a water treatment device installed upstream of the first sampling faucet after the well for a period of up to two weeks ~~in order~~ to obtain a sample of untreated water ~~for purposes of analysis~~ to analyze for coliform bacteria or other contaminants.

(e) 5. The feed pump has a metering device for measuring fluoride or corrosion control chemical flow rates~~; and~~.

SECTION 152. NR 812.37 (4) (e) 6. (Note 1) and (Note 2) are repealed.

SECTION 153. NR 812.38 (1) is amended to read:

NR 812.38 (1) POTABLE WATER SUPPLIES OR SYSTEMS. Chemical addition to a potable well or water system may only be undertaken according to the requirements of s. NR 812.37. The injection of fertilizers or pesticides into a potable well or water system is prohibited. No person may inject fertilizers or pesticides into a potable well or water system. Fertilizers or

pesticides may be used with potable water systems by repumping from a tank or a pond. The discharge from the well pump into a reservoir or pond shall have a free fall from a point at least 2 feet above the established reservoir or pond overflow elevation.

SECTION 154. NR 812.38 (2) (a) 1. and (b) 1. are repealed and recreated to read:

NR 812.38 (2) (a) 1. The injection of fertilizers into a nonpotable well, well pump suction pipe, or pump column is prohibited. No person may inject fertilizers into a nonpotable well, well pump suction pipe, or pump column.

(b) 1. The injection of pesticides into a nonpotable well, well pump suction pipe, or pump column is prohibited. No person may inject pesticides into a nonpotable well, well pump suction pipe, or pump column.

SECTION 155. NR 812.39 (1) and (2) are amended to read:

NR 812.39 (1) WELL WATER LEVEL MEASUREMENT. The department may require the installation and calibration of means for the measurement of static and pumping well water levels for any high capacity well and may require the operator of the well to submit monthly reports of this information. Installation shall be made in a manner as to prevent entrance of contaminants to the water system and in compliance with approval conditions and as depicted in Figure ~~39~~3 of ch. NR 812 Appendix.

(2) RECORDING TOTAL WATER USAGE. The department may require the installation and calibration of means for the recording of total water usage from a high capacity well and ~~may~~ shall require the operator ~~to~~ of the well to submit monthly reports of this information.

SECTION 156. NR 812.40 (5) is amended to read:

NR 812.40 (5) The structure may not be used for storage of materials that could contaminate the well.

SECTION 157. NR 812.40 (5) (Note) is repealed.

SECTION 158. NR 812.41 (1) (c) is amended to read:

NR 812.41 (1) (c) The disinfectant solution shall be prepared according to ~~s. NR 812.22 (4)~~Table D and shall remain in the system at least 8 hours, except for emergency situations when water is needed without delay. A contact time of at least 30 minutes shall be provided for emergency situations.

SECTION 159. NR 812.41 (3) is repealed and recreated to read:

NR 812.41 (3) WATER SAMPLE COLLECTION, ANALYSIS, AND REPORTING. The pump installer shall collect water samples, submit them to a certified laboratory for analysis, and provide the test results in compliance with s. NR 812.46.

SECTION 160. NR 812.41 (4) is repealed.

SECTION 161. NR 812.42 (intro.) is created to read:

NR 812.42 Criteria for evaluation. Each existing water system shall be viewed as an individual unit and its acceptability for use as a source of water shall be determined on the basis of its location, construction, and installation, pump discharge piping arrangement, water quality, and sanitary condition. The owner shall provide written documentation verifying the date of construction or installation or both. Existing installations shall meet all of the following requirements:

SECTION 162. NR 812.42 (1) (intro.) is repealed.

SECTION 163. NR 812.42 (1) (title), (a), (b) 1., 2., 3., 4., and 5. (intro.), a. and b. are amended to read:

(1) (title) LOCATION, WELL CONSTRUCTION~~, PUMP INSTALLATION,~~ AND WATER QUALITY~~, AND SANITARY CONDITION~~.

(a) *Location.* The well location shall ~~conform to~~comply with the requirements in effect at the time the well was constructed as shown in Table E, or to the location requirements of s. NR 812.08, whichever is less restrictive. However, if a contamination source was installed after the well was constructed, the well location shall conform to the requirements in effect at the time of installation of the contamination source. ~~If the well was constructed prior to April 10, 1953, it~~

~~shall meet the separation distance requirements established on April 10, 1953, except those separation distance requirements that are no longer in effect. If a separation distance requirement is less in the current code than it was in the April 10, 1953 code the lesser separation distance requirement applies. A well which meets the location requirements in effect at the time of construction, but does not meet the current location requirements of s. NR 812.08 may only be reconstructed with prior department approval.~~

(b) *Well construction.*

1. The well construction shall ~~be in compliance~~ comply with the construction requirements in effect at the time the well was constructed or shall be in compliance with ~~the~~ any standards ~~of~~for approval issued under ss. NR 812.09 to ~~812.15~~ 812.25, except if the well was constructed prior to April 10, 1953, in which case the well construction shall be in compliance with the standards adopted on April 10, 1953. ~~A well constructed in violation of the requirements in effect at the time of construction, or a well constructed to meet the requirements in effect at the time of construction but not according to the construction requirements of ss. NR 812.09 to 812.15, may only be reconstructed with prior department approval.~~

2. The well casing pipe shall meet the minimum wall thickness requirements of s. NR ~~812.17~~ 812.11 Table ~~V~~B for its diameter and may not be in a deteriorated condition.

3. ~~If the minimum well construction requirements of this paragraph are not met, the well shall be filled and sealed in accordance with s. NR 812.26.~~ For wells in basements or walkout basements, the well casing pipe depth shall be measured from the floor of the basement.

4. ~~Except for where additional well casing pipe depth has been required for a variance or a special well casing depth area, unconsolidated formation wells~~ Wells completed in unconsolidated formations, including both drilled and ~~driven-point~~ driven point wells, shall have minimum well casing pipe depth settings of at least 25 feet below the ground surface, not including the screen; or, if the static water level is deeper than 15 feet, shall have the minimum well casing pipe depth setting at least 10 feet below the static water level.

5. ~~Except for where additional well casing pipe depth has been required for a variance or a special well casing depth area, bedrock wells~~ Wells completed in sandstone shall have minimum well casing pipe depth settings below the ground surface as follows:

a. Twenty-five feet for wells ~~terminating in sandstone,~~ constructed before February 1, 1991~~; or 30 feet for wells terminating in sandstone, constructed on or after February 1, 1991~~.

b. ~~Forty feet for wells terminating in limestone or dolomite.~~ Thirty feet for wells constructed on or after February 1, 1991.

SECTION 164. NR 812.42 (1) (b) 5. c. and d. are repealed.

SECTION 165. NR 812.42 (1) (b) 6. and 7. are created to read:

NR 812.42 (1) (b) 6. Wells terminating in limestone or dolomite shall have minimum well casing pipe depth settings below the ground surface as follows:

a. Forty feet for wells constructed before the effective date of the rule [LRB inserts date].

b. Sixty feet when the depth to bedrock is less than 10 feet below the ground surface and the well was constructed between February 1, 1991 and the effective date of the rule [LRB inserts date].

c. Sixty feet when the depth to bedrock is less than 20 feet below the ground surface and the well was constructed after the effective date of the rule [LRB inserts date].

7. Wells terminating in bedrock other than sandstone, limestone, or dolomite shall have a minimum of 40 feet of casing pipe below the ground surface.

SECTION 166. NR 812.42 (1) (c) is amended to read:

NR 812.42 (1) (c) *Water quality.* A well ~~should~~ shall produce ~~bacteriologically safe water and produce~~ water free from coliform bacteria and free from contaminant levels in ~~exceedence~~ excess of the standards of s. NR 812.06. If ~~a well does not produce bacteriologically safe water or produces water containing contaminant levels in exceedence of~~ the standards of s. NR 812.06 are exceeded, the department may require the water system to be upgraded to meet the requirements of this chapter or may require the well to be filled and sealed according to the criteria and requirements of s. NR 812.26.

SECTION 167. NR 812.42 Table E (precedes NR 812.42 (2)) is created to read:

TABLE E
HISTORIC MINIMUM SEPARATION DISTANCE REQUIREMENTS BETWEEN EXISTING POTABLE OR NONPOTABLE WELLS, RESERVOIRS, SPRINGS AND POSSIBLE SOURCES OF CONTAMINATION

Source	Prior to Oct. 1, 1975	Oct. 1, 1975 to Sept. 30, 1981	Oct. 1, 1981 to Jan 31, 1991	Feb. 1, 1991 to Sept. 30, 1994	Oct. 1, 1994 to Sept. 30, 2014	Oct. 1, 2014 to the effective date of this rule [LRB inserts date]
Absorption Unit (field), soil [See Soil Absorption Unit] (Also known as a POWTS dispersal component)	50’	50’	50’	50’	50’	50’
Agricultural crop field Note: Not a requirement—only a recommendation	None	None	None	None	None	25’ recommended
Air shaft-heating/air conditioning (Vertical, Below grade)	None	None	None	None	25’	25’
Animal Barn	--	--	--	--	--	50’
Animal Barn Pen	None	25’	25’	25’	25’	--
Animal Shelter (not including small residential pet shelter or pet kennel housing 5 or fewer adult pets)	None	50’	50’	50’	50’	50’
Animal Yard—Includes Calf Hutch (but not including residential lot dog kennel enclosing 5 or fewer adult pets)	None	50’	50’	50’	50’	50’
Barn, Animal	--	--	--	--	--	50’
Barn Gutter	None	25’	25’	25’	25’	50’
Building Overhang (from centerline of well)	2’	2’	2’	2’	2’	None
Cemetery Grave Sites	None	100’	100’	50’	50’	50’
Cistern	10’	10’	10’	8’	8’	8’
Coal Storage (greater than 500 tons)	None	None	None	1,200’	1,200’	1,200’
Composting Site (See Solid Waste Processing Facility)	None	None	None	None	250’	250’
Culvert, stormwater	None	None	None	None	None	8’
Discharge to ground from a Water Treatment Device	None	None	None	25’	25’	None
Ditch-Edge of	None	None	None	None	25’	8’
Doghouse or kennel housing 5 or fewer adult pets on residential lot	None	None	None	50’	8’	8’
Downspout Outlet (Rainwater, including the discharge therefrom)	10’	10’	10’	8’	8’	None
Drain - Sanitary building (having pipe conforming to ch. SPS 384) (Buried)	10’	8’	8’	8’	8’	8’
Drain - Sanitary building (not having pipe conforming to ch. SPS 384) (Buried)	10’	25’	25’	25’	25’	25’
DRAIN (any material) (Buried)						
-- Clear Water Drain	10’	10’	10’	8’	8’	None
-- Building-Foundation Drain	10’	10’	10’	8’	8’	None
-- Building-Foundation Drain—Sewer Connected	15’	15’	15’	8’	8’	None
Drillhole used for the underground placement of any waste, surface water or any substance as defined in s. 160.01 (8), Stats.	None	None	None	None	100’	100’
Fertilizer or Pesticide Storage Tank (any size, surface or buried) (This distance applies only for nonpotable wells)	None	None	None	8’	8’	8’
Fertilizer or Pesticide, any size Buried Storage Tank Surface tank >1,500 gal (This distance applies only for potable wells)	None	None	None	100’	100’	100’
Filter Strip	None	None	None	50’	50’	50’
Fuel Oil Tank—Buried	None	100’ (25’ Allowed for Private Res. Lots Only)	100’ (25’ Allowed for Private Res.Lots Only)	100’ (Including any associated buried piping) (25’ allowed for tanks serving single family residences)	100’ (Including any associated buried piping) (25’ allowed for tanks serving single family residences)	100’ (Including any associated buried piping) (25’ allowed for tanks serving single family residences)
Fuel Oil Tank Serving a Single -Family Residence	None	25’ Allowed for Private Res. Lots Only	25’ Allowed for Private Res.Lots Only	25’	25’	25’ (Including any associated piping)
Fuel Oil Tank—Surface (>1,500 gallons) (including any associated piping)	None	None	None	100’	100’	100’ (Including any associated piping)
Fuel Oil Tank—Surface (<1,500 gallons)	None	None	None	None	None	25’
Fertilizer or Pesticide (Dry) Storage Area or Building (more than 100 pounds)	None	None	None	None	100’	100’

Gasoline or Other Petroleum or Liquid Product Tank — Buried (Does not apply to separation distance between Liquid Propane tanks and wells serving single family residences)	None	100’	100’	100’ (Including any associated buried piping)	100’ (Including any associated buried piping)	100’ (Including any associated piping)
Gasoline or Other Petroleum or Liquid Product Tank— Surface (< 1,500 gallons, including any associated buried piping)	None	None	None	None	None	25’
Gasoline or Other Petroleum or Liquid Product Tank— Surface (>1,500 gallons, including any associated buried piping)	None	None	None	100’	100’	100’
Glass Lined Feed Storage Facility (Harvester-Type Silos)	None	25’	25’	50’	50’	50’
Grease Interceptor (Trap) (Buried)	25’	25’	25’	25’	25’	25’
Hazardous Waste Treatment Facility Regulated by the department	None	None	None	1,200’	1,200’	1,200’
Heat exchange drillhole	None	None	None	None	None	None
Holding Tank (Wastewater) (Also known as a POWTS holding component)	None	25’	25’	25’	25’	25’
Infiltration basin or system, Stormwater	None	None	None	None	100’	100’
Junkyard or Scrap Yard	None	None	None	250’	250’	250’
Kennel on residential lot enclosing 5 or fewer adult pets	None	None	None	50’	8’	8’
Kennel, other than above	None	None	None	50’	50’	50’
Lagoon, Treatment (See liquid waste disposal system)	—	—	—	—	—	--
Lake Shoreline (Measured to the edge of the floodway)	None	25’	25’ (60’ For Schools and High Cap. Wells)	25’	25’	25’
Landfills (existing, proposed or abandoned) (Distance to Nearest Fill Area of abandoned landfills if Known; Otherwise to the Property Line)	None	400 yards	400 yards	1,200’	1,200’	1,200’
Lift Station	--	--	--	--	100’	100’
Liquid Propane (L.P.) gas tank (buried) (Applies only to wells serving a single-family residence. For other wells see s. NR 812.04 (4) (d) 1.)	None	None	None	None	None	8’
Liquid Waste Disposal System	None	250’	250’-300’	250’	250’	250’
Manure Hopper or Reception Tank—Liquid-Tight	None	75’	75’-150’	50’	50’	50’
Manure Loading Area	None	None	None	None	50’	50’
Manure Stack -Temporary	None	100’	100’	250’	150’	150’
Manure—Storage Structure (Earthen, Excavated or Non-liquid tight)	None	250’	250’-300’	250’	250’	250’
Manure Storage Structure (Fabricated, Liquid-Tight)	None	100’	100’-175’	100’	100’	100’
Manure—Storage Basin—Liquid-Tight Concrete Floor with an Acceptable Drainage Facility	None	100’	150’-300’	Now in category of Manure Storage Structure	Now in category of Manure Storage Structure	Now in category of Manure Storage Structure
Milk house drain outlet	None	None	None	None	None	50’
Mound System (Measured to the toe of the mound) (Also known as POWTS dispersal component.)	50’	50’	50’	50’	50’	50’
Nonpotable Well	None	None	None	8’	8’	8’
Pesticide or Fertilizer (Dry) Storage Area or Building (More than 100 Pounds)	None	None	None	None	100’	100’
Pesticide or Fertilizer Storage Tank (not buried)—less than 1,500 gallons (this distance applies only for nonpotable wells)	None	None	None	8’	8’	8’
Pesticide or Fertilizer Storage Tank—Buried tank, any size, or any surface tank >1,500 gal (this distance applies only for potable wells)	None	None	None	100’	100’	100’
Pet Waste Pit Disposal Unit	None	50’	50’	50’	50’	50’
Pet animal shelter or kennel on residential lot and housing not more than 5 adult pets.	None	None	None	50’	8’	8’
Pet animal shelter or kennel housing more than 5 adult pets or not on residential lot.	None	None	None	50’	50’	50’
Petroleum Product Tank—Surface - less than 1,500 gallons capacity	None	None	None	None	None	25’
Petroleum Product Tank—Surface - greater than or equal to 1,500 gallons capacity	None	None	None	None	None	100’
Pits—Noncomplying	None	10’	10’ (20’ For Schools, WWTPs, and High Capacity-Including Approved Pits)	8’	8’	8’
Plastic Silage Storage and Transfer Tube	None	None	None	8’	8’	50’

Pond (Measured to nearest high-water edge)	None	None	None	None	None	25’
Pond, Stormwater detention (Edge of)	None	None	None	None	25’	25’
Pond, synthetically-lined decorative yard pond on a residential lot	--	--	--	--	--	None
Pond, treatment (See liquid waste disposal system)	--	--	--	--	--	--
POWTS holding component (Also known as a holding tank.)	25’	25’	25’	25’	25’	25’
POWTS treatment component (Includes septic tanks, aerobic treatment units or filters)	25’	25’	25’	25’	25’	25’
POWTS dispersal component (Also known as a soil absorption unit or mound.)	50’	50’	50’ (200’ for schools)	50’ (200’ for schools)	50’ (200’ for schools)	50’ (200’ for schools)
Privy (Also known as pit privy)	50’ (Sewage Disposal Units)	50’	50’	50’	50’	50’
Quarry (See s. NR 812.12 (4) for well casing depth well construction requirements for wells to be constructed within 500 feet of a quarry or within 1,200 prior to October 1, 2014)	--	--	--	1200’	1200’	500’
Recycling Facility	None	None	None	None	None	100□
Reservoir—Noncomplying	10’ (Cistern)	10’	10’	8’	8’	8’
Ridge and Furrow System (See liquid waste disposal system)						
River or Stream Edge (Measured to the edge of the floodway)	None	25’	25’ (60’ For Schools and High Cap. Wells)	25’	25’	25’
Salt or Deicing Material Storage Area (Including structure and area surrounding where material is transferred to vehicles) (This category includes sand & salt mixtures if salt content of mixture is 5% or more)	None	None	None	250’	250’	250’
Salvage Yard	None	None	None	250’	250’	250’
Scrap Metal Processing Facility	None	None	None	None	None	100’
Septage Landspreading Area Note: Not a requirement—only a recommendation	None	None	None	None	None	25’ recommended
Septic Tank (Also known as a POWTS treatment component)	25’	25’	25’	25’	25’	25’
SEWER (ch. SPS 384 Materials) (Buried)						
—Manure/Gravity sewer	8’	8’	8’	25’	25’	25’
—Manure/Pressurized sewer	8’	8’	25’	25’	25’	25’
—Sanitary Building/Gravity sewer	8’	8’	8’	8’	8’	8’
—Sanitary Building/Pressurized sewer	8’	25’	25’	25’	25’	25’
—Sanitary Collector sewer (Serving ≤ 4 living units or ≤ 6□□diameter)	8’	50’	50’	50’	25’’	25’
—Sanitary Collector sewer (Serving > 4 living units or > 6□□ diameter)	8’	50’	50’	50’	50’	50’
—Influent sewer	50’	50’	50’	50’	50’	50’
—Storm Collector sewer (≤ 6□□ diameter)	8’	50’	50’	50’	25’	8’
—Storm Collector sewer (> 6□□ diameter)	8’	50’	50’	50’	50’	8’
SEWER (not ch. SPS 384 Materials) (Buried)						
—Manure/Gravity sewer	25’	25’	25’	25’	25’	25’
—Manure/Pressurized sewer	25’	50’	50’	50’	50’	50’
—Sanitary Building/gravity sewer	25’	25’	25’	25’	25’	25’
—Sanitary Building/Pressurized sewer	25’	25’	25’	25’	50’	50’
—Storm Building sewer	25’	25’	25’	25’	8’	None
—Sanitary Collector sewer□	25’	50’	50’	50’	50’	50’
—Storm Collector sewer	25’	50’	50’	50’	50’	8’
—Influent sewer	50’	50’	50’	50’	50’	50’
Shoreline—Lake, River or Stream [Measured as indicated in subd. (4) (b) 7.]	None	25’	25’ (60’ For Schools and High Capacity Wells)	25’	25’	25’
Silage Storage, Earthen Trench or Pit	None	100’	100’- 175’	250’	250’	250’
Silage Storage Structure (Fabricated liquid-tight) (In-ground or surface)	None	None	None	None	100’	100’
Silage Storage—Surface, Uncovered	None	None	None	None	100’	100’
Silage Storage Tube (Plastic)	None	None	None	8’	8’	50’
Silo With Pit	None	50’	50’	50’	50’	50’
Silo Without Pit But With Concrete Floor and Drain	None	25’	25’	50’	50’	50’
Single application landspreading of petroleum-contaminated soil	--	--	--	--	250’	250’
Sludge Drying Bed, Liquid-tight	None	None	None	None	None	100’

Sludge Landspreading or Drying Area Note: Not a requirement—only a recommendation	None	200’	200’	250’	250’	25’ recommended
Soil Absorption Unit (□12,000 gal/day, includes alternate unit) (Also known as POWTS dispersal component)	50’	50’	50’ (200’ for schools as of 1978)	50’ (200’ for schools)	50’ (200’ for schools)	50’ (200’ for schools)
Soil Absorption Unit (≥12,000 gal/day, existing or abandoned) (Also known as POWTS dispersal component)	50’	50’	50’ (200’ for schools as of 1978)	250’	250’	250 ‘
Solid Waste Processing Facility (Including composting facilities)	None	None	None	None	250’	250’
Solid Waste Site (Distance to Nearest Fill Area or Proposed Fill Area If Known; Otherwise to the Property Line) (See Landfill)	None	400 yards	400 yards	1,200’	1,200’	1,200’
Solid Waste Transfer Facility	None	None	None	None	250’	250’
Spray Irrigation Waste Disposal Site (See liquid waste disposal system)						
Stormwater detention pond or basin	None	None	None	None	25’	25’
Stormwater infiltration basin or system	None	None	None	None	100’	100’
Sump Clear water	None	None	None	8’	8’	None
Sump—Wastewater (Watertight) (formerly cast-iron equivalent)	None	8’	8’	25’	25’	8’
Sump—Wastewater (not watertight or equivalent to cast iron)	None	25’	25’	25’	25’	25’
Swimming Pool (from edge of water)	None	25’ (Below ground)	25’ (Below ground)	25’ (Below ground)	8’ (above or below ground)	8’ (above or below ground)
Temporary Manure Stack	None	100’	100’	250’	150’	150’
Vegetated Treatment Area (Previously known as a Filter Strip)	None	None	None	50’	50’	50’
Waste Disposal Site (See Landfill)						
Wastewater Treatment Plant Effluent Pipe	None	None	None	50’	50’	50’
Wastewater Treatment Plant Structure, Conveyance or Treatment Unit	None	None	150’	100’	100’	100’
Well or drillhole used for underground placement of any waste, surface water or any substance as defined in s. 160.01, Stats.	None	None	None	None	100’	100’
Yard Hydrant	None	10’	10’	8’	8’	None, but not allowed to be installed in or on well.

SECTION 168. NR 812.42 (2) (title), (intro.), (a), (b), (c), (d), and 1.b., 2. and 3. are amended to read:

(2) PITS AND ~~SUBSURFACE PUMPROOMS (~~ALCOVES~~)~~. ~~Existing pits used only for the housing of valves are exempt from the requirements of this section except that a pit used for this purpose shall be watertight, may not be connected to a sewer, shall be drained to permeable soil or to the ground surface, and may not be subject to flooding.~~ Existing well or pressure tank pits~~,~~ and alcoves ~~and subsurface pumprooms~~ constructed after April 10, 1953 shall comply with the minimum requirements ~~of~~specified in s. NR 812.36 (2). When a well in a ~~free-standing~~ pit is filled and sealed, the pit shall be filled in accordance with s. NR 812.26 ~~(7) (a) 5~~ (5) (m). unless the pit is a complying valve pit. ~~When a well in a free-standing pit is extended above grade, the pit shall be filled in accordance with s. NR 812.26 (7) (a) 5.unless the pit is a complying valve pit~~

If a building is constructed over a well pit or alcove, the well shall meet the requirements of a basement well as specified in s. NR 812.42 (9). Pits and alcoves constructed on or before April 10, 1953 shall meet the following minimum requirements:

(a) *Construction.* The entire pit or ~~subsurface pumproom structure~~ alcove, including the roof, shall be constructed of reinforced watertight poured concrete. If the pit or ~~a subsurface pumproom pit connected to a basement (alcove)~~alcove has a history of being continuously dry, walls of concrete block, brick, or stone with mortared joints~~may be accepted~~ are allowed. The walls, floor and roof shall be crack-free and watertight. The junction of walls and floors and all openings in the structure shall be sealed watertight. The roof or deck shall be at or above the ground surface. Requirements for existing pits are ~~depicted in figures 47 and 48~~shown in Figure ~~11~~10 of ch. NR 812 Appendix. Requirements for existing alcoves are shown in Figure ~~12~~11 of ch. NR 812 Appendix.

(b) *Access.* The pit or alcove shall be provided with a manhole opening, having a raised curbing edge at least 4 inches higher than the pit or alcove roof. A structurally substantial, waterproof, overlapping, tight-fitting cover with skirted sides shall be provided for the manhole. A watertight, cast-iron manhole frame and cover bolted in place with a gasket may be substituted for a curbed manhole. ~~A subsurface pumproom pit~~ An alcove adjoining a basement or a pit not having the manhole centered over the well may have a section of well casing pipe installed directly above the well. This pipe shall be equal in size or larger than the well casing pipe and it shall be sealed with an approved well seal or cap.

(c) *Drainage.* ~~The department recommends that a pit be drained by a separate, metal, gravity drain discharging to the ground surface or to a subsurface pocket of permeable sand or gravel. The drain pipe shall be watertight. If there is a backflow or seepage from the drain into the pit at any time, the drain shall be sealed. When a drain is not installed, the department recommends that the pit have a watertight sump. A subsurface pumproom (alcove) adjoining a basement may be drained to the basement if the basement is adequately drained. If the basement is not adequately drained, concrete shall be poured in the alcove so that the alcove floor is increased in height to one foot above at least level with the basement floor and if the well casing height no longer complies with par. (d), it shall be extended in accordance with par. (d) 1. d. Well subsurface pumproom (alcoves)~~ An alcove adjoining ~~basements~~a basement where the basement is subject to flooding shall be discontinued for use as a well pit and the well shall be

filled and sealed according to s. NR 812.26. The ~~subsurface pumproom (alcove)~~alcove need not be filled and sealed. ~~Pit~~A pit or alcove drain~~s~~ or sump pump discharge pipe~~s~~ may not be directly connected to a sewer or other plumbing system. If the alcove drain discharge pipe is discharging to the ground surface, the end of the ~~surface~~ discharge pipe shall be screened.

(d) ~~*Well*~~ *Casing height*. The well casing pipe shall terminate at least 6 inches above the floor of a pit or ~~a subsurface pumproom pit (alcove) connected to a basement~~ alcove and shall be provided with ~~an approved~~ a one-piece sanitary well seal approved for use under s. NR 812.091.

1. b. The well construction meets the minimum standards of sub. (1) (b), verified by measuring the well casing pipe depth in accordance with sub. (7) (c) 3., if no confirmable well construction report can be found for the well. Well details, including location, well casing pipe depth, total well depth, distances to possible contaminant sources and well owner information shall be entered on a form and submitted to the department in accordance with s. NR ~~812.22 (10)or 812.41 (4)~~812.10 (15).

2. ~~If the pit is a subsurface pumproom (alcove) connected to a basement and the alcove floor~~ If the floor of an alcove is lower than the basement floor, the alcove floor shall be raised to a height at least even with the basement floor by pouring concrete.

3. If the ~~newly poured~~raised alcove floor results in the well casing pipe terminating less than 6 inches above the floor, then the well casing pipe shall be extended as specified in sub. (2) (d) 1. d and in accordance with sub. (12). ~~If the well casing pipe is extended or the floor is raised, a four-inch high, two-inch thick concrete collar shall be placed around the well casing pipe just above where it extends out of the floor.~~

SECTION 169. NR 812.42 (2) (e) (Note) is repealed.

SECTION 170. NR 812.42 (3) is amended to read:

NR 812.42 (3) (title) NONCOMPLYING PITS AND ALCOVES.

(a) *Noncomplying ~~freestanding~~ pit structures*. When ~~the free-standing~~a pit structure does not meet the minimum construction requirements of sub. (2) or when water gains access to a pit through the floor or walls, the floor and at least one wall of the pit shall be perforated and the pit shall be filled after properly extending the well casing pipe above grade in accordance with sub. (12) or after properly filling and sealing the existing well according to s. NR 812.26. Before the

pit is filled, all water system~~ features~~ components, including~~ but not limited to,~~ the pressure tank, pump, discharge piping, electrical wiring and conduit, and any treatment equipment shall be removed from the pit.

(b) *Noncomplying* ~~*subsurface pumprooms (alcoves)*~~*alcoves*. If the pit is ~~subsurface pumproom (alcove) connected to a basement~~ an alcove, the ~~pit need not be~~ alcove does not need to be filled, except when the alcove floor is lower than the basement floor, in which case the floor shall be raised to a height at least even with the basement floor by pouring concrete. To allow for easy removal of the pump for servicing or replacement, this casing extension may be made with the use of a threaded and coupled joint. ~~If the well casing pipe is extended or the floor of the alcove is raised, a four-inch high, two-inch thick concrete collar shall be placed around the well casing pipe just above where it extends out of the floor.~~

(c) *Other modifications to pit or alcove.* Any other modifications to ~~the~~a pit or alcove allowed ~~by the department~~under this chapter shall ~~be made in a manner to~~meet the requirements ~~for pits in~~of s. NR 812.36.

SECTION 171. NR 812.42 (3m) is created to read:

NR 812.42 (3m) VALVE PITS AND ALCOVES. Existing pits and alcoves used only for the housing of valves are exempt from the requirements of this section except that a pit or alcove used for this purpose shall be watertight, may not be connected to a sewer, shall be drained to permeable soil or to the ground surface, and may not be subject to flooding.

SECTION 172. NR 812.42 (4) (e), (f), (g) (intro.), and (h), (5) (intro.), (b) and (c), and (6) (a) 1., 2. a. and (Note), b. and (Note) and c. are amended to read:

NR 812.42 (4) (e) The reservoir shall meet the location requirements ~~listed in Table A~~ in effect at the time of its construction.

(f) When a below ground−grade reservoir or a buried pressure tank pit is to be abandoned, it shall be permanently filled and sealed when the well or drillhole is filled and sealed. The reservoir shall be filled according to the filling and sealing requirements ~~of~~specified in s. NR 812.26 ~~(7) (a) 5.~~(5) (m) for well pits.

(g) (intro.) The owner shall permanently ~~eliminate, by filling and sealing,~~fill and seal a reservoir if any of the following apply:

(h) A reservoir shall be maintained in a clean and sanitary condition and provide water free ~~of bacterial and chemical contamination~~from coliform bacteria and free from contaminant levels in excess of the standards specified in s. NR 812.06.

(5) DUG WELLS. (intro.) An existing dug well may be continued in service only if it ~~continuously~~ produces water ~~bacteriologically safe and containing~~free from coliform bacteria and free from contaminant levels ~~below~~in excess of the standards ~~of~~specified in s. NR 812.06. Use of dug wells is not recommended by the department. A dug well may not be reconstructed without approval under s. NR 812.09(4)(m). Existing dug wells shall meet the following minimum construction requirements:

(b) *Depth.* If the well was dug after June, 1975, the watertight curbing shall extend to a depth of at least 25 feet below ground surface and the well shall produce ~~bacteriologically safe~~ water free from coliform bacteria. If the well was dug prior to June, 1975, the watertight curbing shall extend to at least the 15-foot depth and the well shall produce ~~bacteriologically safe~~ water free from coliform bacteria.

(c) *Cover.* The dug well cover shall be of watertight, reinforced concrete at least 5 inches thick and wide enough to overlap the curbing by at least 2 inches. It shall provide a tight seal and be free of joints. A steel well casing pipe sleeve meeting the requirement for potable well casing pipe specified in s. NR ~~812.17~~812.11 (6) shall extend watertight through the cover to provide access for installing the pump. The steel well casing pipe sleeve shall extend at least 8 inches above the cover and have an approved well cap or a ~~watertight~~one piece well seal.

(6) (a) 1. The subsurface connection to the well casing pipe may be made with an approved weld-on pitless adapter or with an approved pitless unit ~~providing~~provided the adapter or unit is installed according to the requirements of s. NR 812.31 ~~(1), (2) (a), (3) and (4)~~.

2. a. Any buried suction pipe shall be contained in a sealed pressurized conduit or~~,~~ a nonpressurized conduit, if the ~~nonpressure~~nonpressurized conduit was installed before February 1, 1991 (Figures ~~13~~12 and ~~14~~13 of ch. NR 812 Appendix). The ~~nonpressure~~nonpressurized conduit shall meet the pipe requirements of Table ~~V~~B between the connection to the well casing pipe and a basement, or shall be properly connected to the well with an approved pitless adapter or pitless unit designed for and used with a concentric piping arrangement. Unprotected buried suction lines not enclosed in conduit may not be used.

Note: Unprotected buried suction lines have never been allowed by the Wisconsin Well

and Pump Code. ~~Nonpressurized conduits were only allowed prior to February 1, 1991.~~

b. ~~Nonpressure conduit~~Nonpressurized conduits shall have been welded watertight or threaded watertight to the well casing pipe and shall be at least 4 inches in diameter and shall enter the basement such that the bottom of the conduit is at least 6 inches above the basement floor.

Note: ~~Nonpressure~~Nonpressurized conduits to protect buried suction lines were only allowed before February 1, 1991 and then only for installations serving three or fewer homes.

c. A ~~nonpressure~~ nonpressurized conduit may extend at an angle up through a basement floor, or up through a concrete slab floor of a building having no basement, provided the lowest end of the conduit ~~extends to a height~~is at least 6 inches above the floor.

SECTION 173. NR 812.42 (6) (a) 2.c. (Note) is repealed.

SECTION 174. NR 812.42 (6) (a) 2. d. is created to read:

NR 812.42 (6) (a) 2. d. The basement end of a nonpressurized conduit shall be sealed with a watertight seal.

SECTION 175. NR 812.42 (6) (a) 3., (b) (intro.), 1., 2. and 4., (c), (d), and (e), (7) (title), (a) (intro.), (b) and (c) and (8) (a) (intro.) are amended to read:

NR 812.42 (6) (a) 3. Buried submersible pump discharge pipes connected to pitless adapters or pitless units shall conform to the ~~specifications~~requirements specified in s. NR ~~812.17~~812.11 (6) for steel pipe or shall conform to the requirements in the "Pipe and Tubing for water services and private water mains" table in ch. SPS 384. This pipe shall be maintained under system pressure at all times. No check valve may be placed in the pump discharge line between a pitless adapter or unit and a pressure tank or other pressure vessel. The check valve shall be located either at the top of the submersible pump, in that portion of the discharge pipe within the well or on the spool of an approved spool-type pitless unit.

(b) (intro.) ~~Installation for water supplies serving installations other than schools, high capacity well installations and those installations identified in par. (a)~~Installations for non-community water system and water systems serving more than 3 families in residential units except high capacity and school wells shall meet all of the following requirements:

1. The subsurface connection to the well casing pipe may be made with ~~an approved~~ a factory-assembled pitless unit ~~providing~~provided the unit is approved and installed according to the requirements of s. NR 812.31 ~~(1) and (3) or (4)~~.

2. ~~For off-set pump installations, any~~All suction pipe for off-set pump installations shall be enclosed in a sealed pressurized conduit between the connection to the well casing pipe and a basement, or shall be connected to the well with an approved factory-assembled pitless unit designed for and having a concentric pressurized piping arrangement. Unprotected buried suction lines or suction lines enclosed in ~~nonpressure~~nonpressurized conduits may not be used. The pipe for a pressurized conduit shall meet the requirements of Table ~~V~~B and shall enter the basement such that any pump suction pipe in the basement not enclosed in a pressurized conduit shall be at least 6 inches above the basement floor. ~~The department recommends that the pump impeller or cylinder of pump units be located in basements not subject to flooding and be at least one foot above the floor. See figures 34-36 for pressurized conduit installations.~~

4. When an existing ~~offset~~off-set pump installation using a ~~nonpressure~~nonpressurized conduit has been or will be converted to a submersible pump installation, the ~~nonpressure~~nonpressurized conduit shall be completely eliminated by cutting off the well casing pipe below the ~~nonpressure~~nonpressurized conduit, extending the well casing pipe to at least 12 inches above grade in accordance with sub. (12) and installing pressurized discharge piping according to the requirements of ss. NR 812.28, 812.31, and 812.32 (4).

(c) Pump installations for water supplies serving schools, and high capacity wells shall be provided with an above-ground discharge meeting the minimum requirements of s. NR 812.32 ~~(1) (a), (5), (6) and (7), except when the high capacity or school approval allowed for alternate installation~~.

(d) *Pit pump ~~setting~~location*. A pump located in a conforming pit or alcove shall be installed to allow the sealing of the top of the well with an approved one-piece sanitary well seal.

(e) *Hand pumps*. Hand pumps may be continued in service if the pump base flange is bolted watertight to a well casing pipe flange and has a gasket seal; if the pump is firmly threaded to the well casing pipe ~~for small diameter pipe~~; or if the structured base of the pump has recesses and is bolted to the top of the well casing pipe ~~which is at least 2 feet above the regional flood elevation. The well casing pipe flange or the top of the well casing pipe shall terminate at the height indicated in sub. (7)~~.

(7) (title) ~~HEIGHTS OF EXISTING WELLS~~CASING HEIGHT.

(a) (intro.) When a well is not terminated in a basement, in a walkout basement, in a pit, or in an alcove~~or in a subsurface pumproom~~, the well casing pipe shall extend above grade as follows:

(b) When the height of a well casing pipe does not meet the requirements of this section, it shall be extended in accordance with ~~sub.~~subs. (11) and (12) to a height at least 12 inches above ground grade or above the floor of a pumphouse; or, if applicable, 2 feet above the regional flood elevation. ~~The well casing pipe may only be extended if the well meets the well casing pipe depth requirements of sub. (1) (b). If it does not meet these requirements, the well shall be filled and sealed according to the requirements of s. NR 812.26. If there is no confirmable well construction report available for the well the well casing pipe depth shall be measured. Well details, including location, well casing pipe depth, total well depth, distances to possible contaminant sources, and well owner information shall be entered on a form and submitted to the department in accordance with NR 812.22 (10) or 812.41 (4).~~

(c) 1. When a well is terminated in a basement, a below-grade crawl space, in a walkout basement, in a pit or in an alcove~~or in a subsurface pumproom~~, the well casing pipe shall extend 6 inches above the floor of the structure.

2. When the height of a well casing pipe does not meet the requirements of this section, it shall be extended in accordance with sub. (12) to a height at least 12 inches above the floor of the structure, except that for wells ~~located in~~extended out of pits and alcoves the well casing pipe shall be extended at least 12 inches above the outside ground grade. ~~For situations where~~When the well would create an obstruction ~~including in a stoop, sidewalk, breezeway, driveway, garage or patio, making it impractical to raise the well casing pipe up and out of the alcove~~to pedestrian passage, the well casing pipe may be raised to a height just below the ceiling of the alcove structure.

3. The well casing pipe may only be extended if the well meets the well casing pipe depth requirements of sub. (1) (b). If it does not meet the requirements of sub. (1) (b), the well shall be filled and sealed according to the requirements of s. NR 812.26. The well casing pipe depth shall be measured before extending the well casing pipe, if there is no confirmable well construction report for the well. Well details, including location, well casing pipe depth, total well depth, distances to possible contaminant sources, and well owner information shall be entered on a form

and submitted to the department in accordance with s. NR ~~812.22 (10) or 812.41 (4)~~812.10 ~~(14)~~ (15).

(8) EXISTING WELL SEALS AND CAPS. (a) (intro.) ~~An overlapping non-vermin-proof~~A noncomplying well cap or well seal shall be replaced with an approved well cap or well seal in any of these situations:

SECTION 176. NR 812.42 (8) (b) is repealed.

SECTION 177. NR 812.42 (8) (c), (d), and (e), (9) (a) (title), 2., 3, 4.a., b., and c., and (b) 4. are amended to read:

NR 812.42 (8) (c) ~~Sanitary seals having solid or split-plate seals may be used but split-plate seals may only be used if the well is enclosed.~~ Split-plate well seals may only be used when the well is located in a pumphouse or a building.

(d) ~~When a well cap or seal is replaced, it shall be replaced with an approved vermin-proof cap or an approved sanitary well seal.~~ No open holes, other than ~~the~~an optional screened well vent, may exist in ~~the~~a new replacement well cap or well seal.

(e) Approved ~~vermin-proof~~well caps or approved ~~sanitary~~well seals ~~may~~shall be installed by licensed water well drillers or registered water well drilling businesses, or licensed pump installers or registered pump installing businesses.

(9) WELLS IN BASEMENTS AND WALKOUT BASEMENTS.

(a) (title) *Wells in basements and below-grade crawl spaces, not including wells in ~~subsurface pumprooms (alcoves)~~alcoves*.

2. Wells terminating in basements or below-grade crawl spaces shall ~~be evaluated based on the sanitary safety of the well location and construction, pump installation and condition of the basement or below-grade crawl space in terms of the potential for the well to continuously produce water free from contaminants~~meet the general requirements of NR 812.42 (1).

3. Screens may not be replaced on ~~driven-point~~driven point wells terminating in or extending through basements or below-grade crawl spaces. When a ~~driven-point~~driven point well screen needs replacement, the ~~driven-point~~driven point well shall be permanently filled and sealed according to the requirements of s. NR 812.26. Any replacement well shall meet the requirements for new wells in this chapter.

4. a. The well was installed before April 10, 1953~~, the date after which wells in basements and below grade crawl spaces were no longer allowed~~.

b. If the well is a driven point, the point was never replaced after April 10, 1953~~, the date after which wells in basements and below grade crawl spaces could no longer be reconstructed~~.

c. The well produces water ~~continuously~~free from ~~contaminants~~ contaminant levels in excess of the standards of s. NR 812.06.

(b) 4. The well produces water ~~continuously~~free from ~~contaminants~~contaminant levels in excess of the standards of s. NR 812.06.

SECTION 178. NR 812.42 (9) (b) 9. is created to read:

NR 812.42 (9) (b) 9. The well is sealed watertight where the well casing exits the basement floor.

SECTION 179. NR 812.42 (10) and (11) (a) are amended to read:

NR 812.42 (10) DRIVEWAY RAMPS. A well may terminate within a driveway ramp~~, with or without a variance, before October 1, 2014,~~ if the installation complies with the requirements for driveway ramps in ~~Subchapter III~~s. NR 812.36 (3).

(11) (a) *Pits and alcoves, noncompliant casing height or ~~Well Deepening~~ well deepening*. Before extending any well casing pipe out of a pit or alcove, extending casing when the height is noncompliant, or deepening a well constructed by another individual, the ~~water~~ well driller or the pump installer shall measure the well casing pipe depth to verify that the casing depth complies with the rules in effect at the time the well casing was installed including any special well casing depth area requirements or variances, if no confirmable well construction report can be found for the well. Well details, including location, well casing pipe depth, total well depth, distances to possible contaminant sources, and well owner information shall be entered on a form and submitted to the department in accordance with s. NR ~~812.22 (10) or 812.41 (4)~~812.10 (15).

SECTION 180. NR 812.42 (11) (am) is created to read:

NR 812.42 (11) (am) *Reconstruction.* A well constructed in violation of the requirements in effect at the time of construction or a well constructed to meet the requirements in effect at the

time of construction but not according to the construction requirements of ss. NR 812.09 to 812.15 may not be reconstructed.

SECTION 181. NR 812.42 (11) (b) is amended to read:

NR 812.42 (11) (b) *Sample faucet*. When doing any pump work involving replacement of the pressure tank, or work involving the water supply piping inside the basement or building, ~~upstream of the pressure tank,~~ the pump installer shall install ~~a complying~~sample ~~faucet~~faucets that meet the requirements specified in s. NR 812.34 if ~~one is~~any are missing. The pump installer shall also replace any sample faucet that does not comply with the requirements of s. NR 812.34, ~~including any faucet that was installed before February 1, 1991 and~~ including replacement of any threaded sample faucet with a sample faucet without threads. The pump installer or well owner may not file the threads off a noncomplying sample faucet.

SECTION 182. NR 812.42 (11) (b) (Note) is repealed.

SECTION 183. NR 812.42 (11) (c) 2., (d) (title), (d), (e) (title), (e) and (f), (12) (a) (intro.) and 3. are amended to read:

NR 812.42 (11) (c) 2. When the well casing height above grade does not comply with subd. 1. a. or b., the ~~water~~ well driller or the pump installer shall measure the well casing pipe depth to verify that the well casing pipe depth complies with the rules in effect at the time that the well was constructed, if there is no confirmable well construction report available for the well. Well details, including location, well casing pipe depth, total well depth, distances to possible contaminant sources and well owner information shall be entered on a form and submitted to the department in accordance with s. NR ~~812.22 (10)or 812.41 (4)~~812.10 (15).

(d) (title) ~~*Vermin-Proof Well Cap or Seal*~~*Well cap or seal*. When doing any water well work or pump installing work that involves entry into a well, the ~~water~~ well driller or pump installer shall replace any ~~non-vermin-proof~~ unapproved well cap or seal with an approved ~~vermin-proof~~ well cap or sanitary well seal.

(e) (title) ~~*Nonpressure*~~*Nonpressurized* ~~*Conduit*~~*conduit*. When any water well drilling work or pump installing work is performed involving entry into a well that has a ~~nonpressure~~nonpressurized conduit and the nonpressurized conduit may continue to be used, the

~~water~~ well driller or pump installer shall evaluate the integrity of the ~~nonpressure~~nonpressurized conduit and its connection to the well casing pipe by performing a pressure test. The nonpressurized conduit shall be tested and proven watertight under a pressure of not less than 14 psi. The pressure shall be maintained for at least 30 minutes. If the ~~nonpressure~~nonpressurized conduit fails the pressure test, the installation shall be changed to a pitless connection. The ~~nonpressure~~nonpressurized conduit shall be completely eliminated by cutting off the well casing pipe below the ~~nonpressure~~nonpressurized conduit and extending the well casing pipe to at least 12 inches above grade and installing pressurized discharge piping according to the requirements of ss. NR 812.28, 812.31 and 812.32 (4). The extension of the well casing pipe shall be in accordance with sub. (12).

(f) *Corrections.* The features specified in pars. (a) to (e) must be corrected and may not be noted on a noncomplying features form instead of correcting the noncomplying feature or testing the ~~nonpressure~~nonpressurized conduit.

(12) (a) (intro.) The well casing pipe in the ground may only be extended up if it has the minimum wall thickness for its diameter according to the requirements of s. NR ~~812.17~~812.11 (6) Table ~~V~~B and is not in a deteriorated condition. If it does not meet these requirements, the well shall be filled and sealed according to the requirements of s. NR 812.26. The well casing pipe extension (riser pipe) shall meet the requirements of s. NR ~~812.17 (2)~~812.11 (6) and shall be attached to the top of the existing casing by ~~one~~any of the following methods:

3. Welding a properly-sized, snug-fitting, pipe nipple, beveled on the lower end and having threads on the upper end, and meeting the requirements of s. NR ~~812.17 (2)~~812.11 (6) to the beveled end of the well casing pipe. ~~The top of the well casing pipe and the bottom of the pipe nipple to be welded shall both have beveled ends.~~ The pipe nipple shall be welded on the inside and the outside contact surfaces of the pipe nipple. ~~The riser pipe shall be threaded to~~ A threaded riser pipe shall be screwed onto the top of the welded on pipe nipple.

SECTION 184. NR 812.42 (13) is repealed and recreated to read:

NR 812.42 (13) DISINFECTION FLUSHING AND SAMPLING. When working on existing water wells or pump installations, the well and water system shall be:

(a) Disinfected and flushed in accordance with s. NR 812.41.

(b) Sampled in accordance with s. NR 812.46.

SECTION 185. NR 812.43 (1) (a) and 1., (b) and (c) are amended to read:

NR 812.43 (1) (a) A variance request to the separation distance specified in s. NR 812.08 ~~(4) (g) 1.,~~ Table A for an existing water supply well within 1,200 feet of a proposed landfill or landfill expansion, shall be signed and submitted to the department by the owner of the well or by the owner of the landfill. Both parties shall have the right to appeal the variance approval, pursuant to ch. 227, Stats.

1. ~~In cases where~~If the application for a variance has been submitted by the landfill owner, the application shall include documentation that written notification of the variance request has been provided to any well owner meeting conditions under the separation distance specified in s. NR 812.08 ~~(4) (g) 1~~Table A.

(b) A variance request to the separation distance specified in s. NR 812.08 ~~(4) (g) 1.~~Table A for an existing water supply well within 1,200 feet of a landfill may be granted by the department where conditions warrant, using the concept of comparable protection. Comparable protection may be provided by appropriate measures including~~, but not limited to~~ a deeper well casing depth setting, specific grouting materials or methods, specific drilling methodology or additional well water sampling results. These measures will be determined by the department for the purpose of safeguarding the groundwater and the water supply from potential sources of contamination.

(c) A variance request to the separation distance specified in s. NR 812.08 ~~(4) (g) 1.~~Table A for a well to be constructed within 1,200 feet of a landfill not subject to expansion shall be signed and submitted to the department by the owner of the well. If a variance is granted, the department shall notify the landfill owner. If the landfill owner is unknown, the department shall notify the municipality where the landfill is located.

SECTION 186. NR 812.43 (2) is repealed and recreated to read:

NR 812.43 (2) The department may grant a variance to the casing depth construction requirement specified in s. NR 812.14 (2) if the well constructor or well constructor's agent demonstrates, and the department agrees, that adequate water quantity or water quality is not available below the required casing depth. If a variance is granted under this paragraph, the

department may require additional conditions in the variance approval, including continuous chlorination or permanent cement grouting to the ground surface.

SECTION 187. NR 812.44 (1) (a), (d) and (3) are amended to read:

NR 812.44 (1) (a) An individual may not for compensation, in contemplation of a transfer of real property, conduct an inspection of the real property for the purpose of locating or evaluating water supply wells or pressure systems or wells that must be filled and sealed on the real property, unless the individual is a licensed water well driller or a licensed pump installer, or meets the requirements specified in par. (d).

(d) ~~County employees are not required to obtain a well driller or pump installer license to~~ A county employee may conduct property transfer well inspections without being a licensed water well driller or licensed pump installer if the county has adopted a Level 3 county delegation program under ch. NR 845, the employee meets the training and examination requirements of s. NR 845.08, and the inspections are conducted as part of ~~their~~ the county employee's duties ~~as county employees~~. Property transfer well inspections performed by Level 3 delegated county employees shall be conducted in accordance with the evaluation criteria in this subchapter and using the department form specified for property transfer well inspections.

(3) FORMS AND INSTRUCTIONS. ~~Licensed water well drillers or licensed pump installers,~~ The property transfer well inspector, when conducting property transfer well inspections, shall use the department form specified for that purpose. A separate form shall be completed for each well. The form shall be completed in full according to department instructions and shall be true and accurate. ~~Inspectors~~The property transfer well inspector shall provide the person who requested the inspection with the completed property transfer well inspection form. The inspector may attach their own forms or letters, provided those forms are not represented to be part of the department form. Use of the department form does not imply department approval of the well and pressure system. The property transfer well and pressure system inspection form shall not be submitted to the department except in the case of a variance request. ~~After the department has developed an online entry system for submitting variance requests, the inspector shall submit the variance request, with the inspection form, laboratory test reports, and photos electronically.~~

SECTION 188. NR 812.44 (4) is repealed and recreated to read:

NR 812.44 (4) WATER SAMPLE COLLECTION, ANALYSIS AND REPORTING. The property transfer well inspector shall collect water samples, submit them to a certified laboratory for analysis, and provide the test results in compliance with s. NR 812.46.

SECTION 189. NR 812.44 (5) (b) 6., 13., 14., and 16., and (d) are amended to read:

NR 812.44 (5) (b) 6. The existence of any noncomplying well pit or ~~subsurface pumproom (alcove)~~ alcove.

13. The existence of a ~~driven-point (sand-point)~~ driven point well installed on or after February 1, 1991 for which a well construction report is not available or a ~~driven-point~~driven point well of any construction date that has less than 25 feet of well casing pipe, not including the screen.

14. The existence of a noncomplying ~~nonpressure~~nonpressurized conduit, either horizontal or vertical.

16. The existence of an offset pump or offset pump piping that is ~~not located at least~~ less than 12 inches above a basement floor, if installed on or after October 1, 2014, or that is located less than 6 inches above a basement floor, if installed prior to October 1, 2014.

(d) The property transfer well inspector shall indicate on the inspection form whether the well and pressure system comply with this chapter; comply with this chapter with the exception of needing a more comprehensive search or additional research; or does not comply with this chapter.

SECTION 190. NR 812.45 (1) (a), (b) and (c) are amended to read:

NR 812.45 (1) (a) Licensing and registration as provided in this chapter, ch. 280, Stats., or ~~s. NR 812.26 (9)~~ch. NR 146.

(b) Disinfection requirements, as provided under ss. NR ~~812.22 (4)~~812.12 (17), 812.27 (5), 812.41 (1), or 812.42 (13).

(c) Sampling and reporting requirements, as provided under ss. NR 812.04 (2), 812.09 (4) (a) 3., ~~812.10 (11) or (12), 812.22 (6), (7), (8), (9), or (10),~~ 812.10 (10), (11), or (15), 812.26 ~~(3) or (8)~~(7), ~~812.27 (6), 812.41 (3) or (4),~~ 812.27(12), 812.42 (13), 812.44 (3) or (4), or 812.46.

SECTION 191. NR 812 Subchapter VIII is created to read:

SUBCHAPTER VIII

WATER SAMPLING, ANALYSIS AND REPORTING REQUIREMENTS

NR 812.46 **Water sampling, analysis and reporting requirements.**

(1) SAMPLES REQUIRED FOLLOWING WELL DRILLING, WELL CONSTRUCTION OR PUMP INSTALLING.

(a) *Total coliform bacteria.* A well driller, well constructor, or pump installer shall collect water samples to be analyzed for total coliform bacteria after performing any of the following activities as allowed by his or her license:

1. Pump installing for a new well, unless the pump installer is employed by the same business that drilled or constructed the well or is the same individual who drilled or constructed the well, then only one total coliform bacteria sample is required after the pump installation has been completed, if the pump installation will be completed within 60 days of the well completion.

2. Replacing a pump or pressure tank on an existing water system that does not involve entry into the well.

3. Pump installing involving entry into an existing well where arsenic and nitrate samples have been collected and analyzed following pump installing activities within the past 6 months by the same licensee.

4. Entering a well to: diagnose any feature or problem with the well, including pressure testing a nonpressurized conduit, a pitless adapter, or well casing pipe; measure casing depth or total well depth; clean or bail a well without the use of chemicals; or raise the well casing height.

5. After corrective action following a total coliform bacteria-positive test result as required under s. NR 812.10 (12) or 812.27 (8).

(b) *Total coliform bacteria and nitrate.* A well driller or well constructor shall collect water samples to be analyzed for total coliform bacteria and nitrate after performing any of the following activities:

1. New well construction.

2. Well reconstruction, including deepening, lining or screen replacement.

3. Well redevelopment.

4. Physical conditioning of a well in accordance with s. NR 812.22.

(c) *Total coliform bacteria, nitrate and arsenic*. A well driller, well constructor, or pump installer shall collect water samples to be analyzed for total coliform bacteria, nitrate, and arsenic after performing any of the following activities as allowed by his or her license:

1. Entering an existing well to perform pump installing activities, or to install, replace or repair any equipment related to pump installing, including installing water level measuring devices, except where par. (a) 3. applies.

2. Chemical conditioning of a well in accordance with s. NR 812.22.

(d) *Special well casing depth areas*. A well driller or well constructor shall collect water samples and submit them for analyses as specified by the department when constructing or reconstructing a well located within a special well casing depth area.

(e) *Water samples not required.*

1. Water samples are not required when a well is entered for the sole purpose of taking a water level measurement if the equipment used for measuring the water level has been disinfected between measurements and the equipment and the well cap or seal have been handled in a sanitary manner.

2. Water samples are not required when opening a well cap for the sole purposes of visually inspecting a well or disinfecting a well.

(f) *When to collect water samples.* A well driller, well constructor, or pump installer shall do all of the following:

1. Collect water samples after any activities specified in pars. (a) to (d) are performed and before the water system is placed into service.

2. Collect water samples no later than 30 days following completion of the well drilling, well construction or pump installing. Well drilling or well construction is considered complete when all operations that require the use of drilling, driving or annular space sealing equipment have been completed. Pump installing is considered complete when the pressure system is capable of providing water to the plumbing system.

(2) SAMPLE COLLECTION, HANDLING AND SUBMITTAL. A well driller, well contractor, or pump installer shall meet all of the following requirements:

(a) *Where to collect water samples*. Samples collected after any activity specified in sub. (1) shall be collected at the sample faucet located upstream of the pressure tank or installed on

the tee of the pressure tank. If there is no sample faucet or the sample faucet is not accessible, samples shall be collected off the drilling rig, or from a faucet located upstream of any water treatment equipment. Faucets used for sampling shall be cold water taps free of aerators, strainers, hose attachments, mixing type faucets and treatment devices. The location of sample collection shall be noted on the sample form.

(b) *Sample collection and handling.*

1. Deliver samples or make arrangements to have samples delivered to a laboratory no later than 48 hours after the sample was collected.

2. Collect samples for total coliform bacteria analysis in a sample bottle that does not contain thiosulfate.

3. Collect and submit a replacement sample no later than 30 days following notification from the laboratory that a sample was rejected for improper collection, improper handling, or presence of chlorine.

Note: A laboratory may have additional requirements for sample collection and handling.

(c) *Where to submit samples.*

1. Water samples for total coliform bacteria shall be analyzed by a laboratory that has received certification under ch. ATCP 77.

2. Water samples for nitrate shall be analyzed by a laboratory certified by the department under ch. NR 149 to perform nitrate analysis of drinking water, using an approved method listed in s. NR 809.113 Table A.

3. Water samples for arsenic shall be analyzed by a laboratory certified by the department under ch. NR 149 to perform arsenic analysis of drinking water, using an approved method listed in s. NR 809.113, Table A.

4. Water samples for a contaminant specified to be sampled as part of a specific requirement for a special well casing depth area, or otherwise required by the department, shall be analyzed by a laboratory certified for drinking water analyses under ch. NR 149 to analyze drinking water for the presence of that contaminant, to determine if the contaminant is at a level below the primary drinking water standard specified in s. NR 812.06, using an approved method appropriate for the contaminant and listed in s. NR 809.311 Table F, 809.113 Table A, 809.203 Table CM or 809.243 Table E.

(3) DELEGATION OF SAMPLING RESPONSIBILITIES.

(a) A well driller, well constructor, or pump installer may delegate collection of their water samples following well drilling or pump installing activities to an agent.

(b) The well driller, well constructor, or pump installer shall provide the agent with the correct sample forms and license number.

(c) The well driller, well constructor, or pump installer is responsible for ensuring that the delegated agent follows all the requirements specified in sub. (1) and (2). If a delegated agent fails to meet any of the requirements specified in sub. (1) and (2), the well driller, well constructor, or pump installer is responsible for noncompliance.

(4) WATER SAMPLE TEST FORMS. The well driller, well constructor, or pump installer shall use and provide the water sample test forms specified by the department for sampling required under sub. (2). The information entered on the water sample test form by the well driller, well constructor, pump installer or their agent shall be complete, true and accurate and include sample site location, date and time of collection, and name of sampler.

(5) TEST RESULTS. The well driller, well constructor, or pump installer shall provide the well owner or the owner's agent with a copy of each laboratory test report no later than 10 days after the well driller's, well constructor's, or pump installer's receipt of the laboratory test report. The well driller, well constructor, or pump installer shall notify the well owner or agent as soon as practicable, but no later than 48 hours after being notified by a laboratory that the well water is total coliform bacteria-positive or contains a contaminant level in excess of a standard in s. NR 812.06.

(6) SAMPLING FOR PROPERTY TRANSFER WELL INSPECTIONS.

(a) *Potable Wells.* When a property transfer well inspection is conducted, the property transfer well inspector shall collect water samples to be analyzed for total coliform bacteria, nitrate and arsenic for each potable well on the property and submit them for analysis to a laboratory in accordance with sub. (2) (c).

(b) *Nonpotable wells.* When a property transfer well inspection is conducted, the property transfer well inspector shall collect a water sample to be analyzed for total coliform bacteria for each nonpotable well on the property and submit it to a laboratory in accordance with sub. (2) (c).

(c) *Where to collect samples*. Required samples for property transfer well inspections shall be collected as specified in sub. (2) (a). The location of sample collection shall be noted on the inspection form.

(d) *Delegation of sampling responsibilities*. The property transfer well inspector may not delegate water sample collection for a property transfer well inspection to another individual.

(e) *Sample handling*. Sample collection, handling, and submittal shall be in accordance with sub. (2).

(f) *Test results*. The property transfer well inspector shall provide the water sample test results to the party who requested the inspection. Water sample test results for property transfer well inspections shall not be submitted to the department unless requested by the department to evaluate a variance application.

(7) OTHER REQUIRED SAMPLES. For any other water samples required by the department under s. NR 812.09 or 812.43, the applicant or designee shall meet the sample collection, handling and submittal requirements of sub. (2) and ch. NR 149.

(8) LABORATORY RESPONSIBILITIES.

(a) *Invalid sample*. A laboratory shall reject any sample submitted under this section that is received later than 48-hours after sample collection.

(b) *Sample integrity*. The laboratory shall test the sample for the presence of free chlorine before analyzing for total coliform bacteria. If free chlorine is present in the sample above 0.1 mg/L, the laboratory shall reject the sample. Laboratories shall reject samples that are frozen.

(c) *Bacteria analyses*. Samples for total coliform bacteria analysis shall be analyzed within 48 hours of sample collection. If any sample is total coliform bacteria-positive, the laboratory shall further analyze that total coliform bacteria-positive culture medium to determine if *E. coli* are present.

(d) *Nitrate analyses*. Samples for nitrate analysis may be analyzed without acid preservation if analyzed within 48 hours of sample collection. Samples analyzed more than 48 hours after collection shall be acidified upon receipt, analyzed for nitrate plus nitrite, and reported as total nitrate plus nitrite.

(e) *Arsenic analyses*. Samples for arsenic analysis received at the laboratory shall be acidified upon receipt according to method requirements, and shall be held for at least 16 hours prior to beginning analysis.

(f) *Reporting test results*. Laboratories used for compliance with sub. (1) (a) to (d) shall electronically report the test results to the department no later than 31 days after completion of the analysis. The water sample test results and data entered from the test request form into the department data system shall meet all of the following requirements:

1. Be reported by the laboratory that initially received the samples, even if analysis was subcontracted to another laboratory.

2. Have been analyzed by a laboratory holding the drinking water certification for the analysis performed.

3. Include all total coliform bacteria-positive and *E. coli*-positive test results.

4. Be complete, true, and accurate.

5. Be reported to the department only once per sample analysis.

6. Indicate if a sample is rejected for failure to comply with par. (a) or (b).

(g) *Record retention*. Records of analyses and water sample test forms for samples collected to comply with this section shall be kept by the laboratory for not less than 6 years. The laboratory shall provide sampling records to the department upon request.

(9) MULTIPLE USES OF TEST RESULTS NOT ALLOWED.

(a) Water samples collected to meet the sampling requirements for well drilling, well constructing, or pump installing may not be used to meet the sampling requirements for property transfer well inspections.

(b) Water samples collected to meet the sampling requirement for property transfer well inspections may not be used to meet the sampling requirements for well drilling, well constructing, or pump installing.

(c) Water samples collected at a non-community water system to meet the sampling requirements of ch. NR 809 may not be used to meet the sampling requirements of this chapter.

(d) Water samples collected at a non-community water system to meet the sampling requirements of this chapter may not be used to meet the sampling requirements of ch. NR 809.

SECTION 192. NR 812 Figures 1 to 75 are repealed.

SECTION 193. NR 812 Appendix is created to read:

Figure 1. Pitless unit connections for wells with steel well casing pipe.

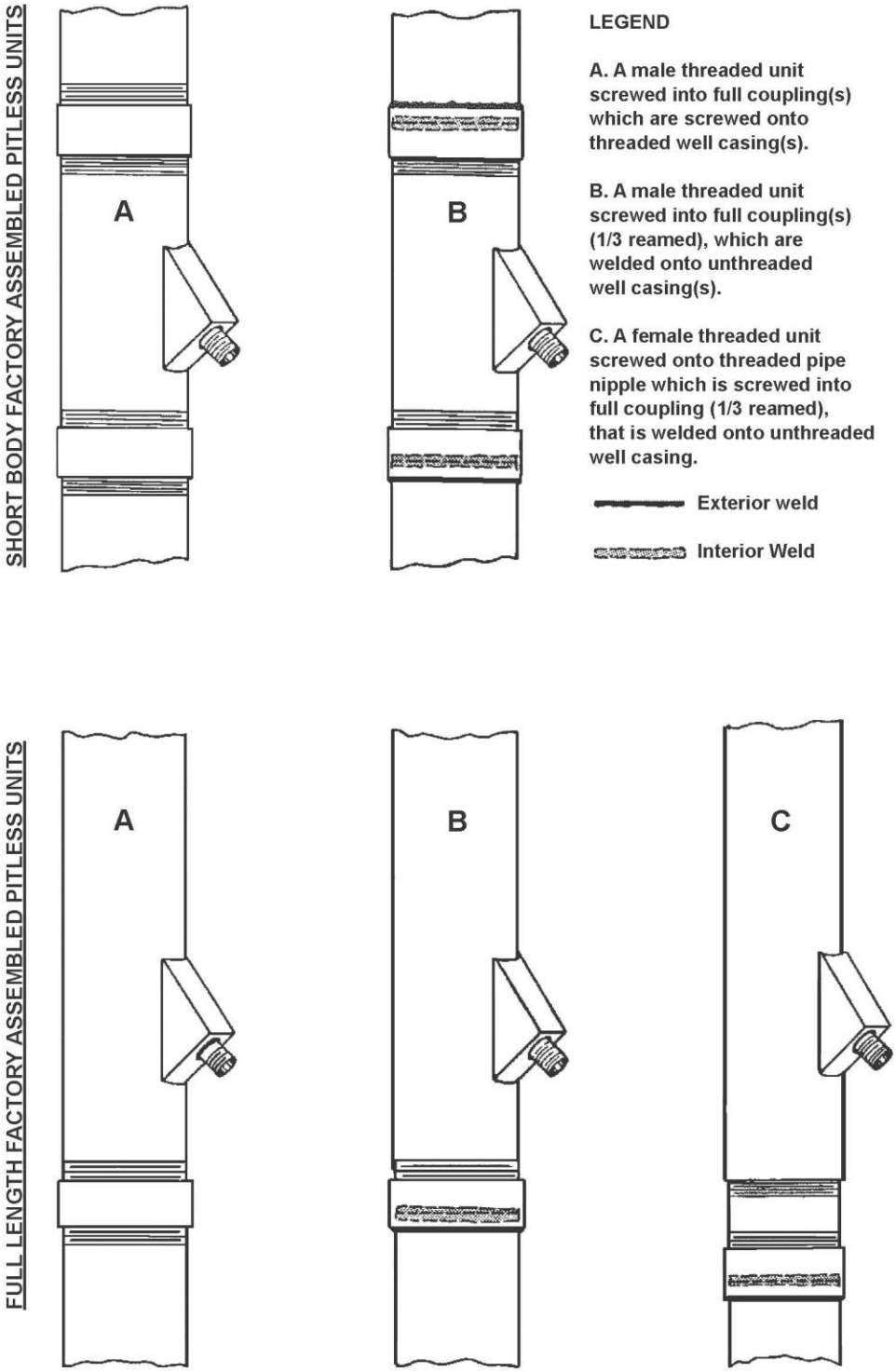

Figure 2. Pitless unit connections for wells with thermoplastic well casing pipe.

SHORT BODY FACTORY ASSEMBLED PITLESS UNITS

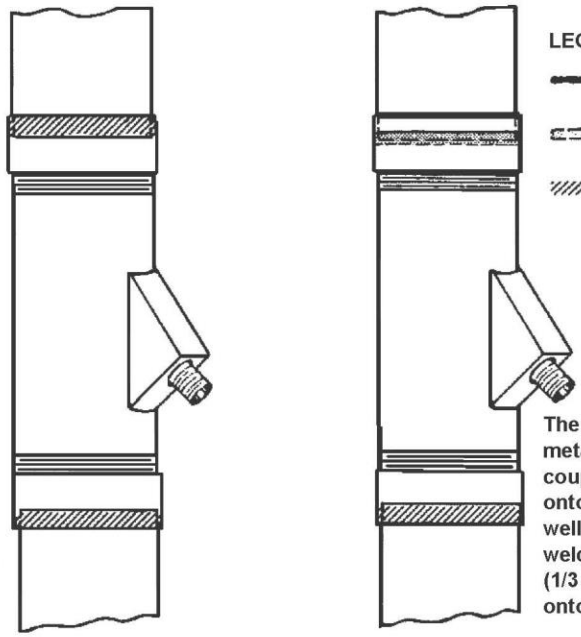

LEGEND

Exterior weld

Interior Weld

Internal solvent weld

A male threaded metal unit screwed into plastic couplings, which are solvent welded onto plastic well casings.

The bottom of a male threaded metal unit, screwed into plastic coupling which is solvent welded onto plastic well casing. A steel well casing riser which has been welded to full metal coupling (1/3 reamed), which is screwed onto top of unit.

FULL LENGTH FACTORY ASSEMBLED PITLESS UNITS

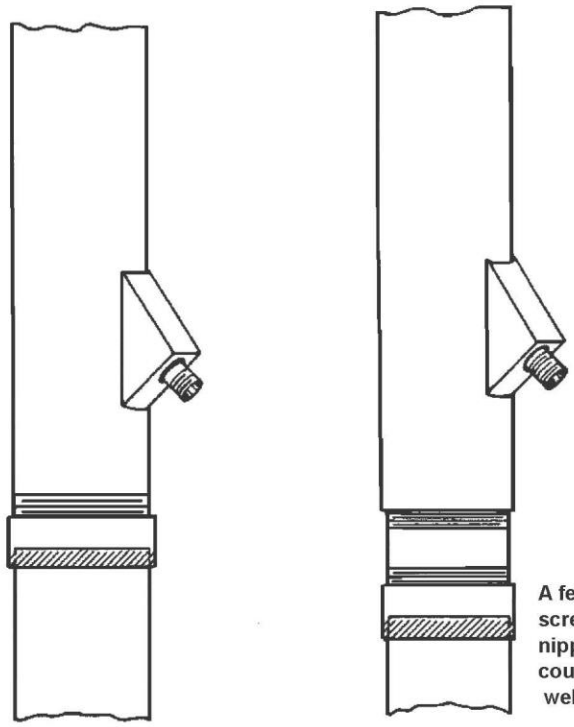

A male threaded metal unit screwed into plastic coupling, which is solvent welded onto plastic well casing.

A female threaded metal unit screwed onto threaded steel pipe nipple, which is screwed into plastic coupling that has been solvent welded onto plastic well casing.

Figure 3. High capacity well pump installation depicting pumpage and water level measuring devices, well vents and air-relief vacuum breakers.

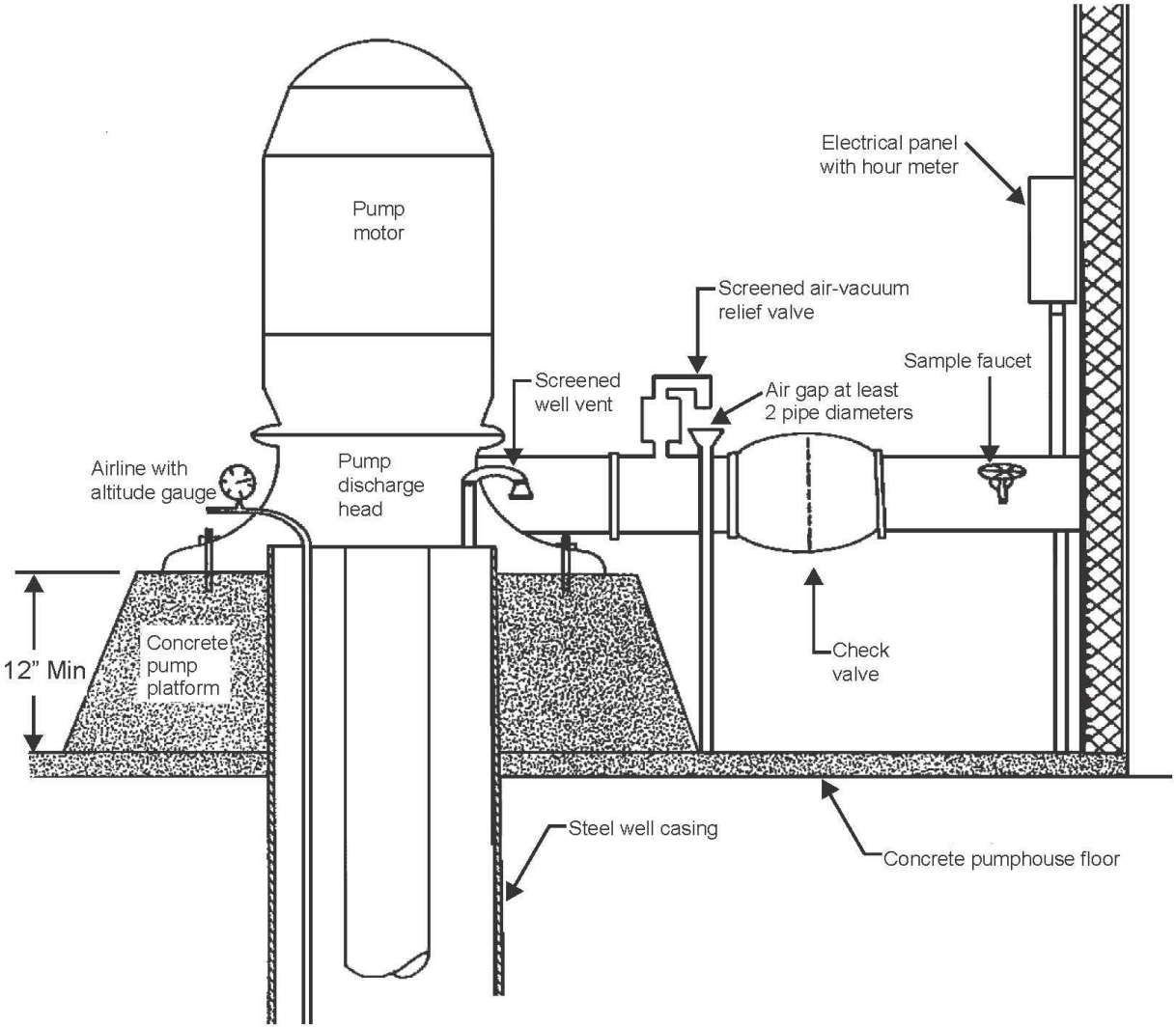

Figure 4. Flowing well - Overflow piping arrangement with a submersible pump.

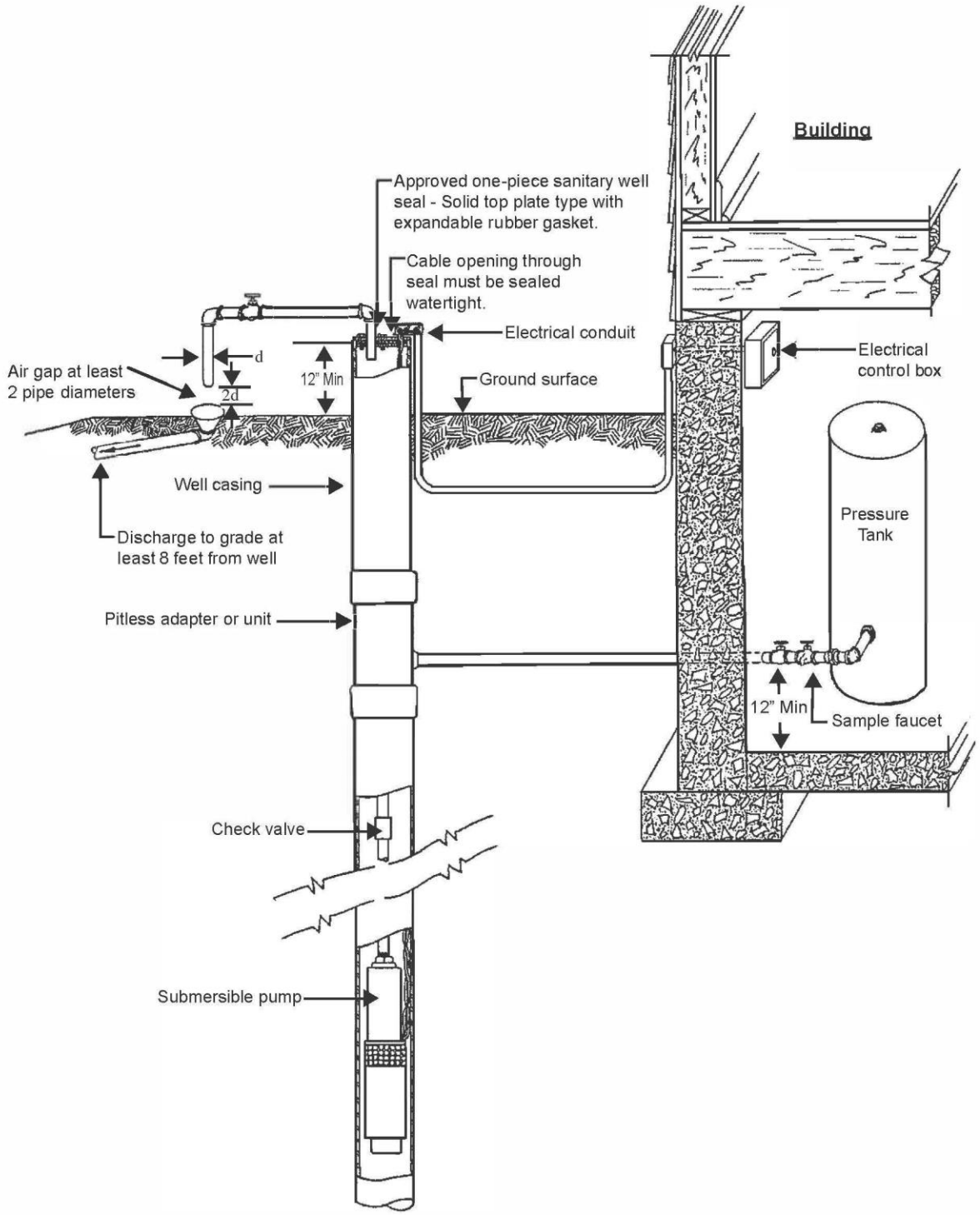

Figure 5. Flowing well - surge tank installation.

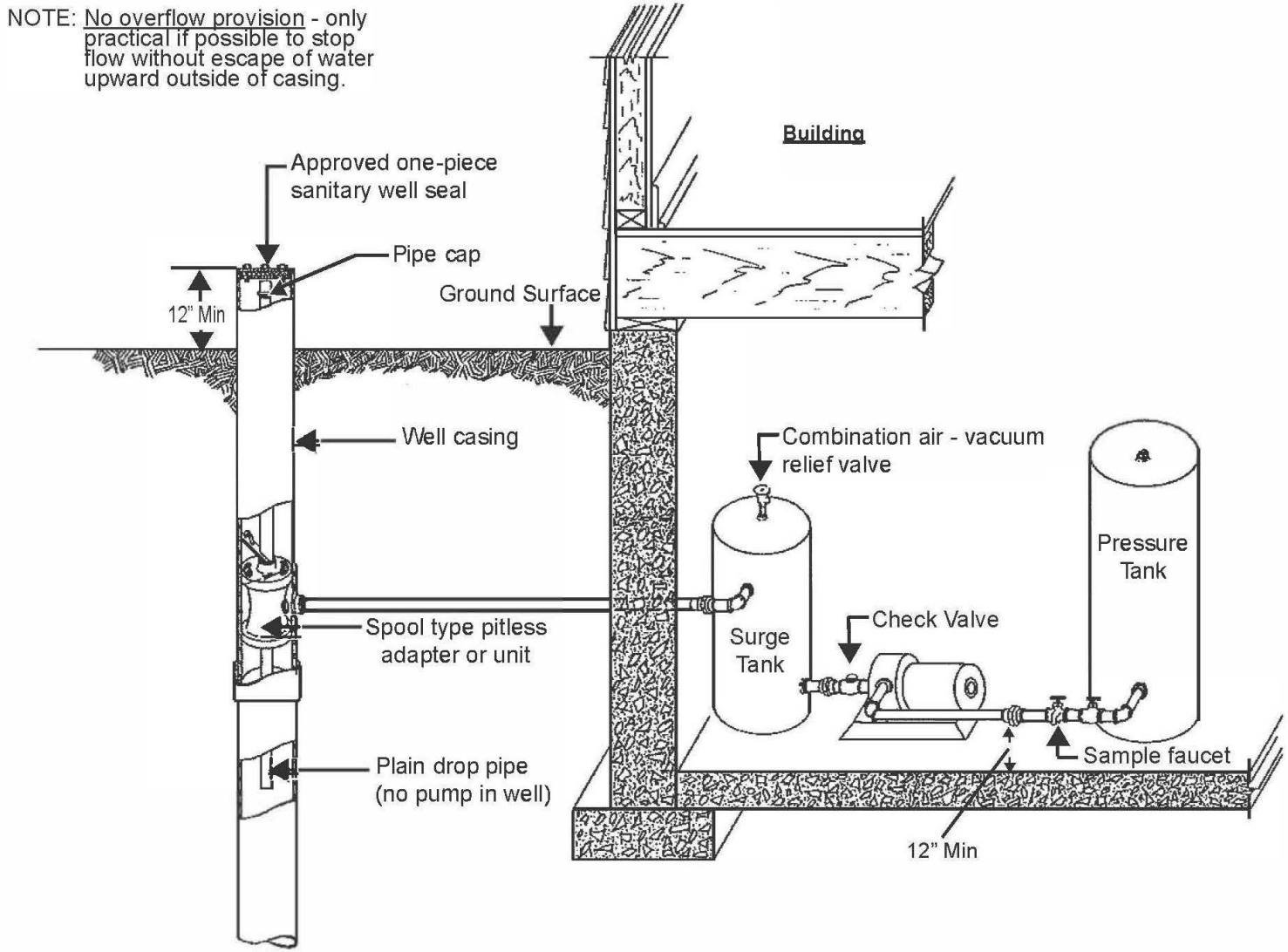

Figure 6. Flowing well - Overflow piping arrangement with a surge tank and no pump.

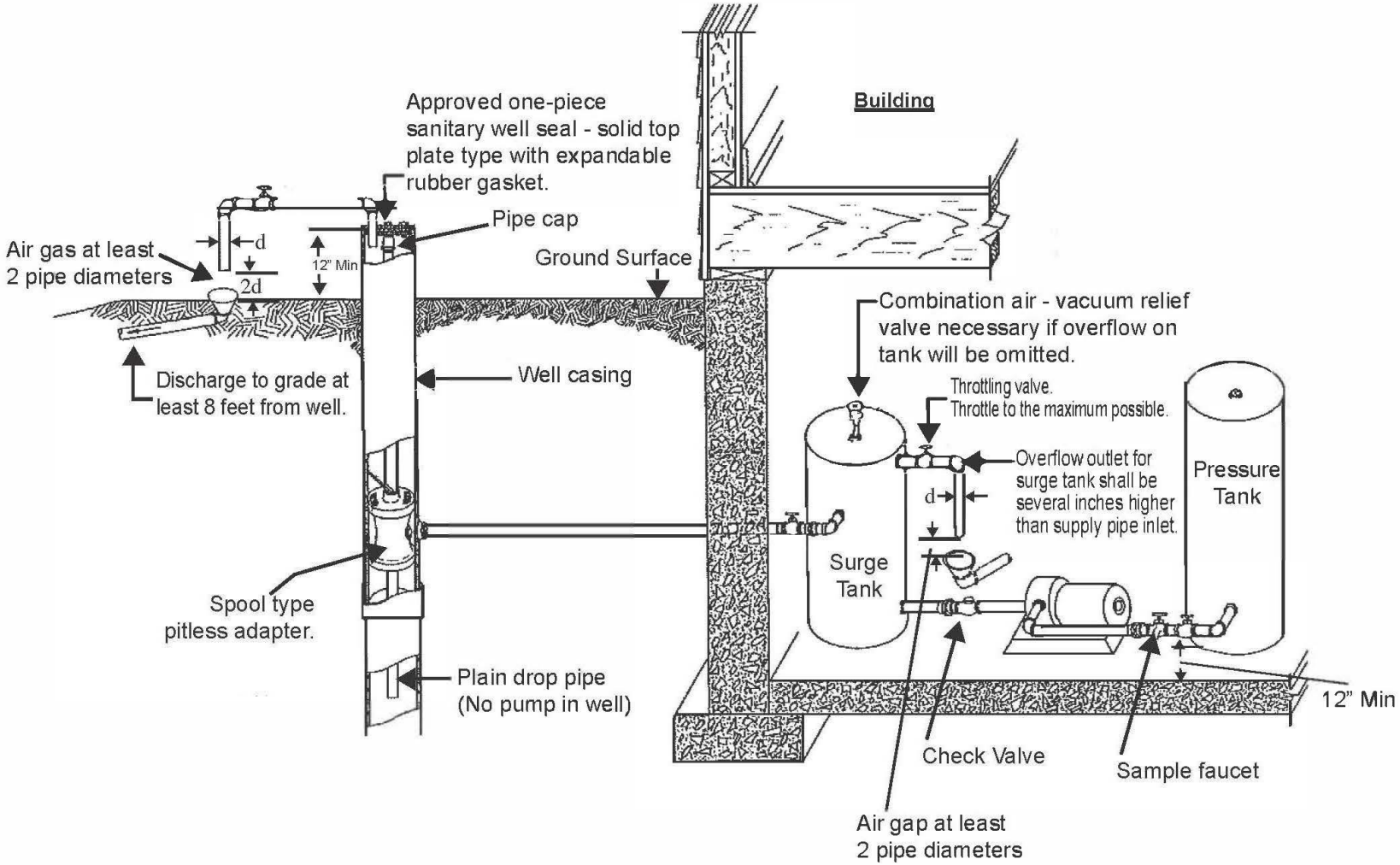

Figure 7. Reservoir specifications.

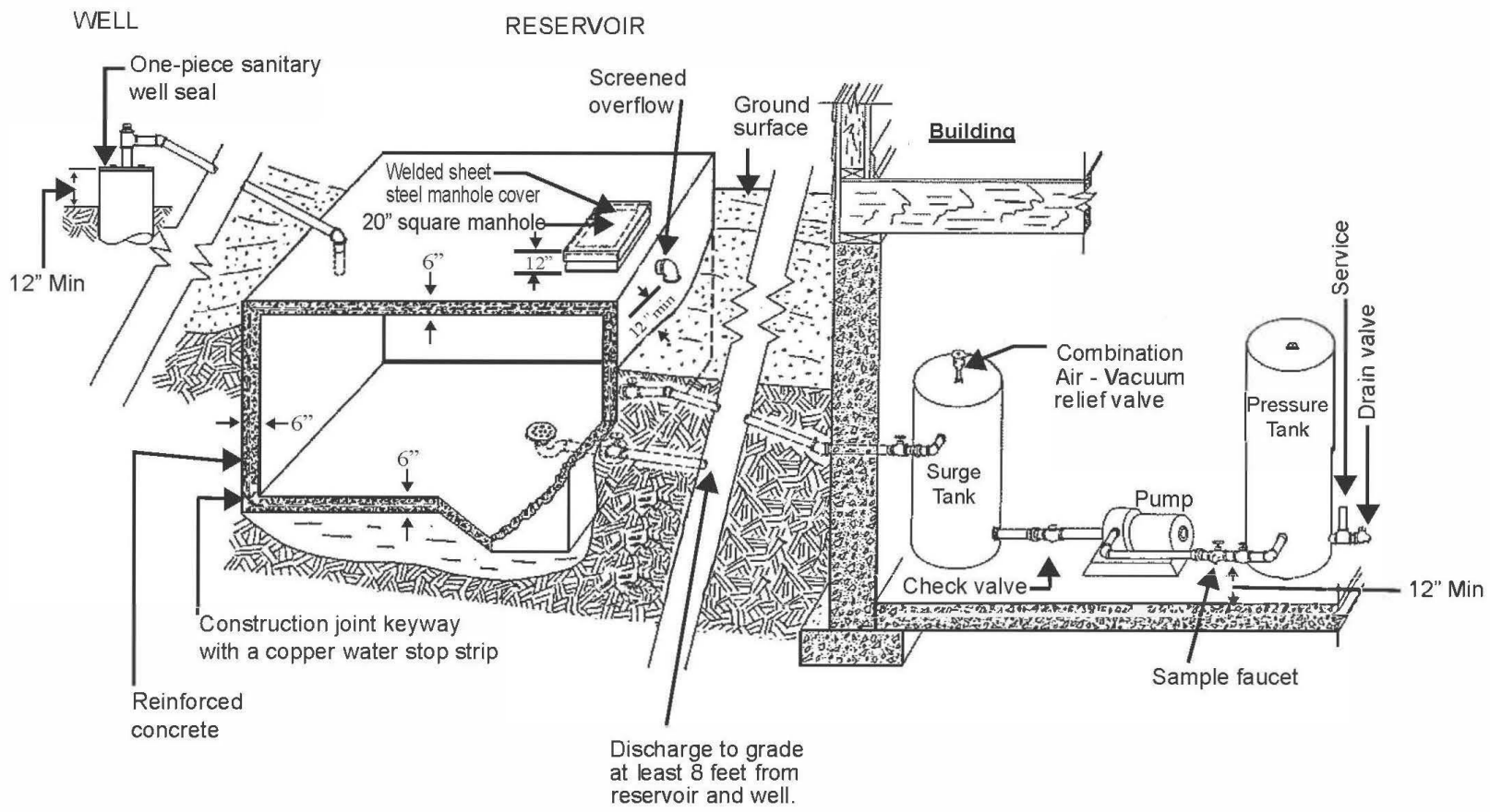

Figure 8. Well pits - Minimum requirements

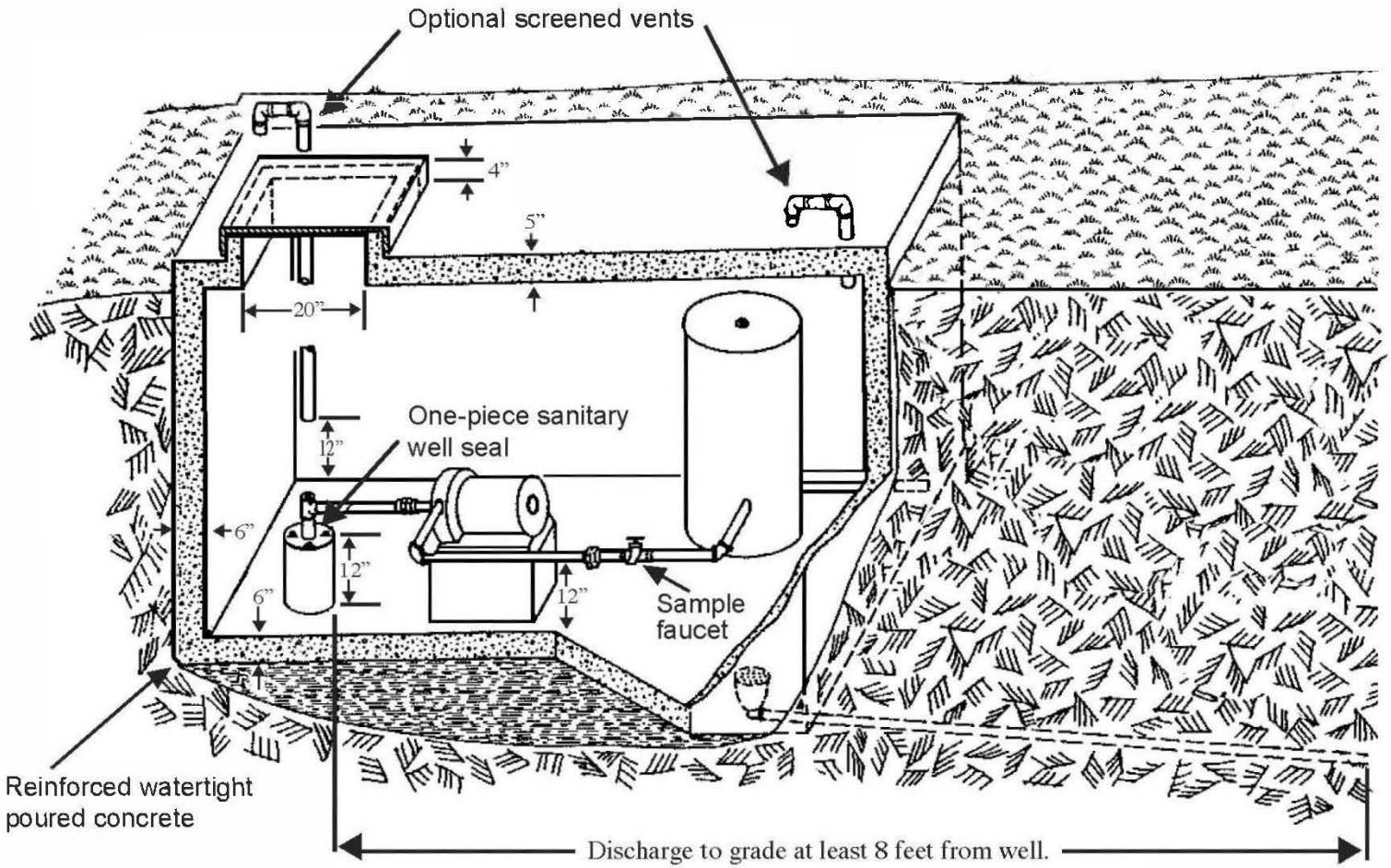

Figure 9. Driveway Ramp Installation

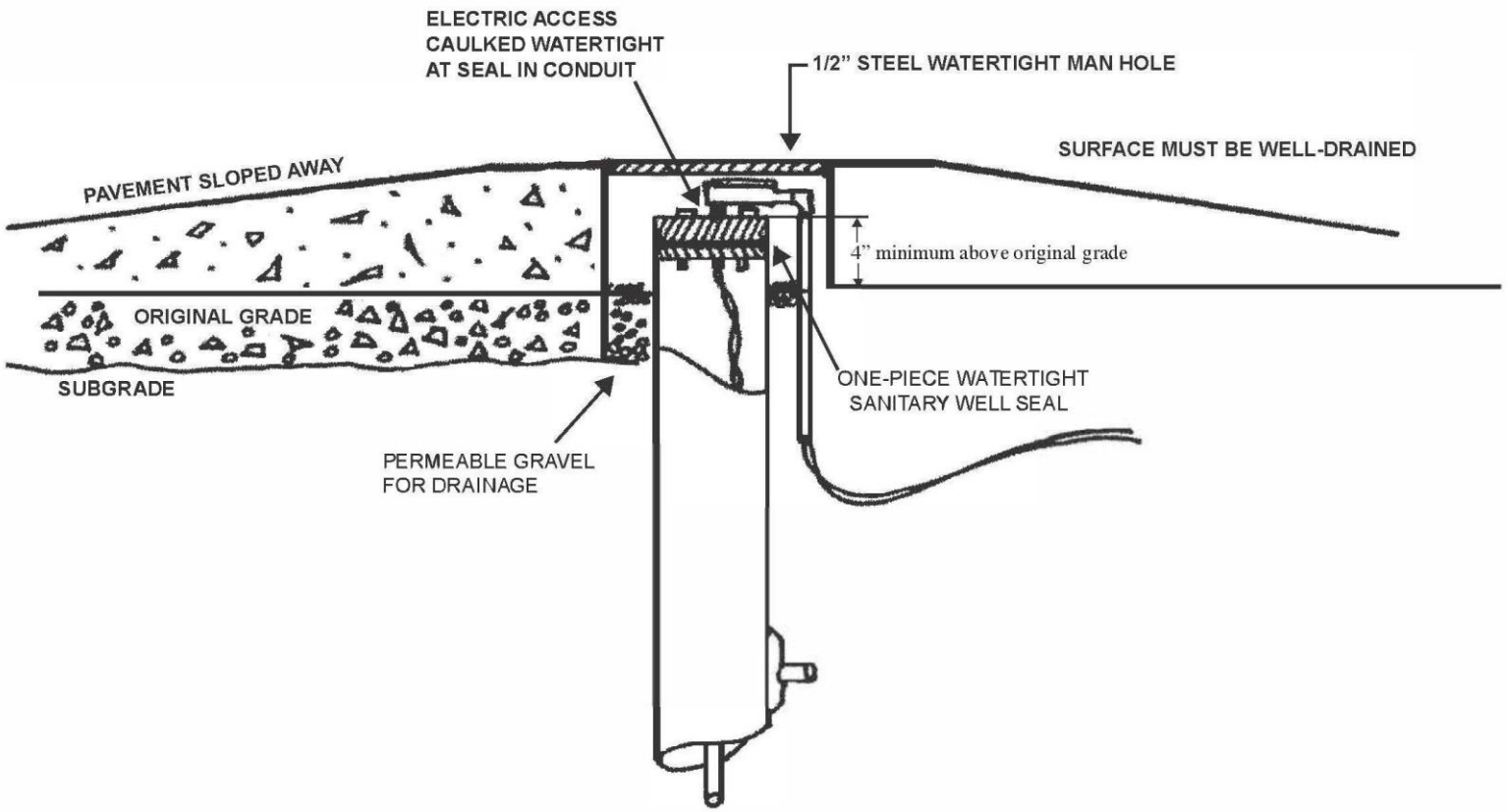

Figure 10. Well pits - Minimum requirements for pits installed on or before April 10, 1953.

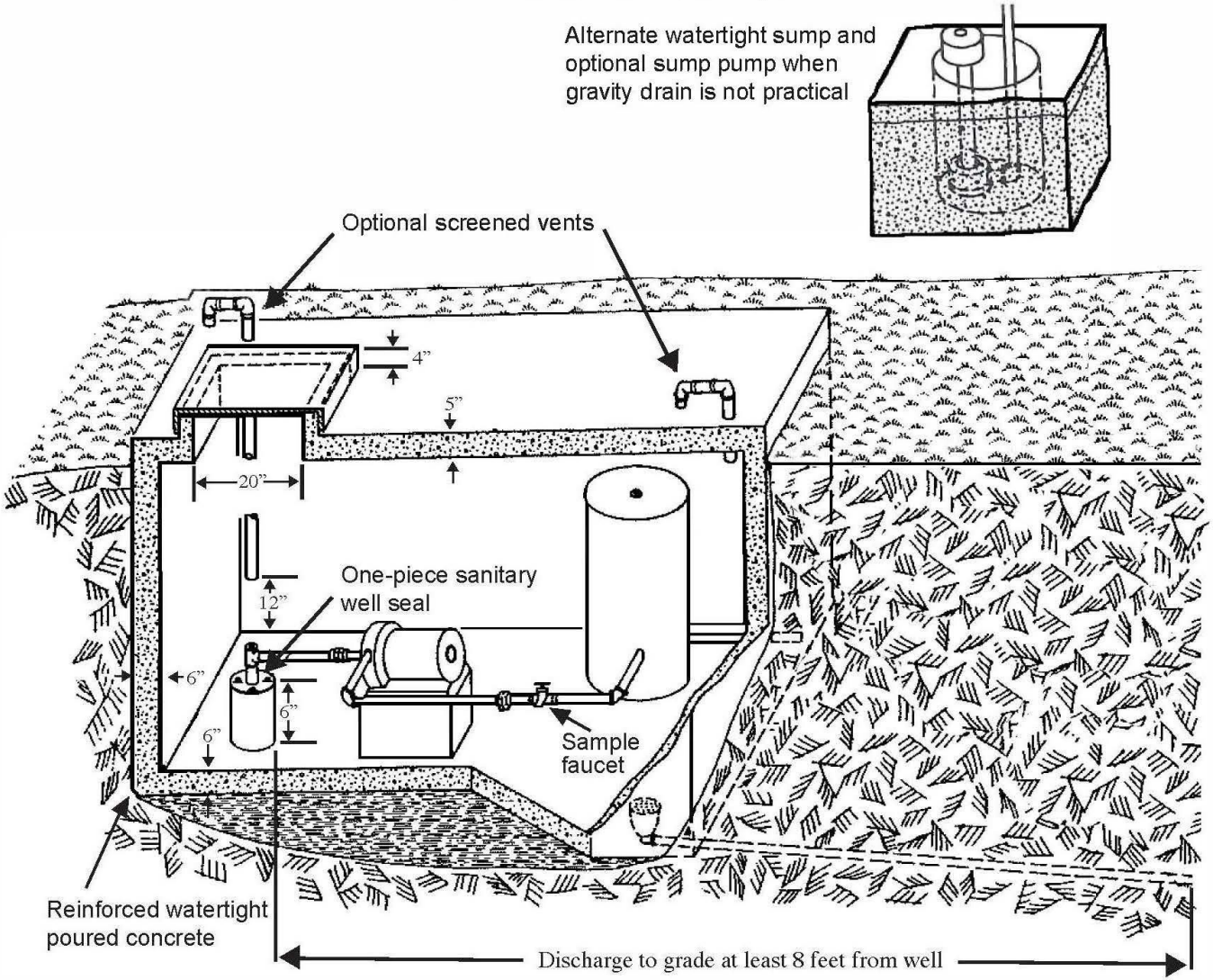

Figure 11. Alcove - Requirements for an alcove installed on or before April 10, 1953

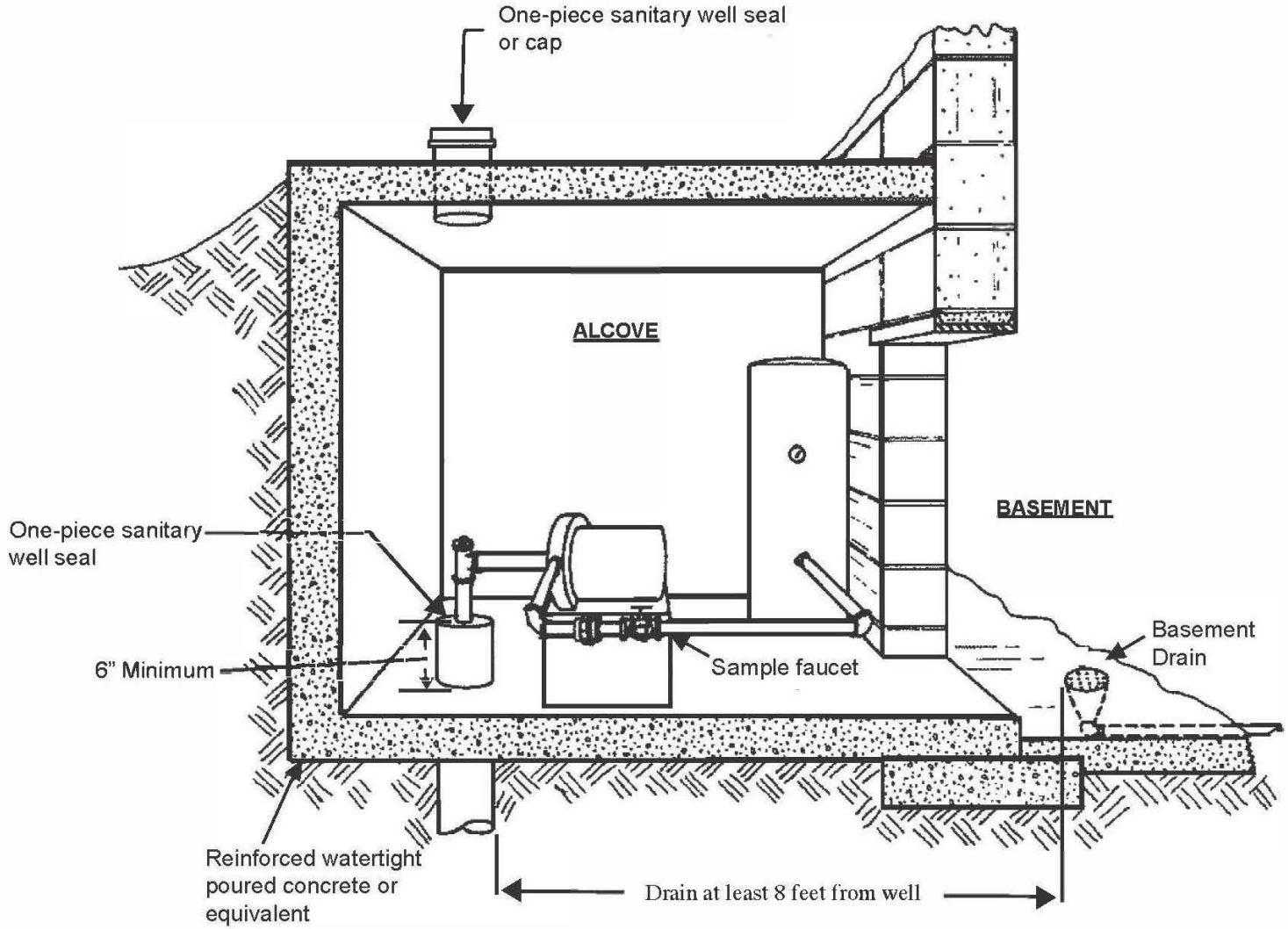

Figure 12. Minimum requirements for pump installations for wells with nonpressurized conduit installed prior to Febuary 1, 1991

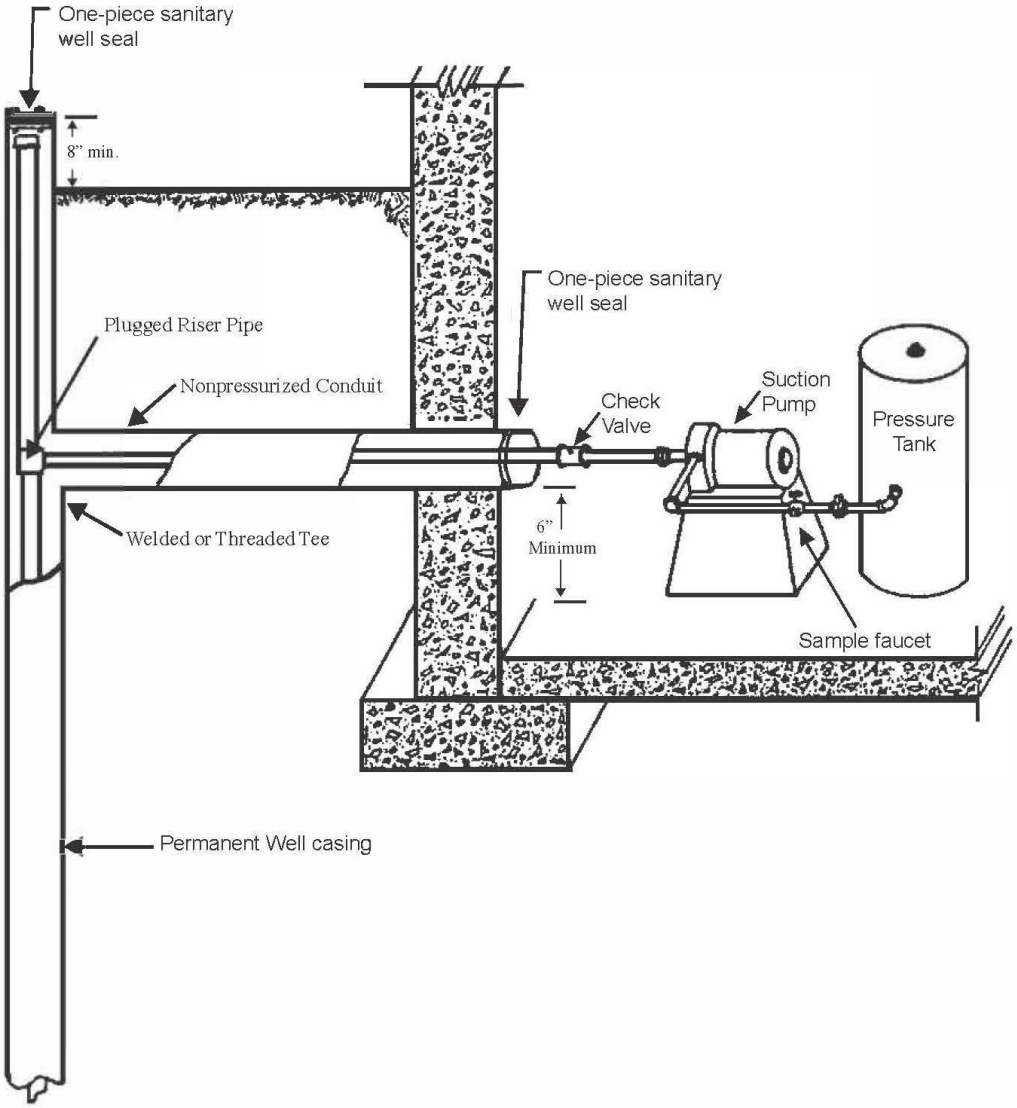

Figure 13. Pump installation for a deep well jet pump assembly and a nonpressurized conduit installed prior to Febuary 1, 1991

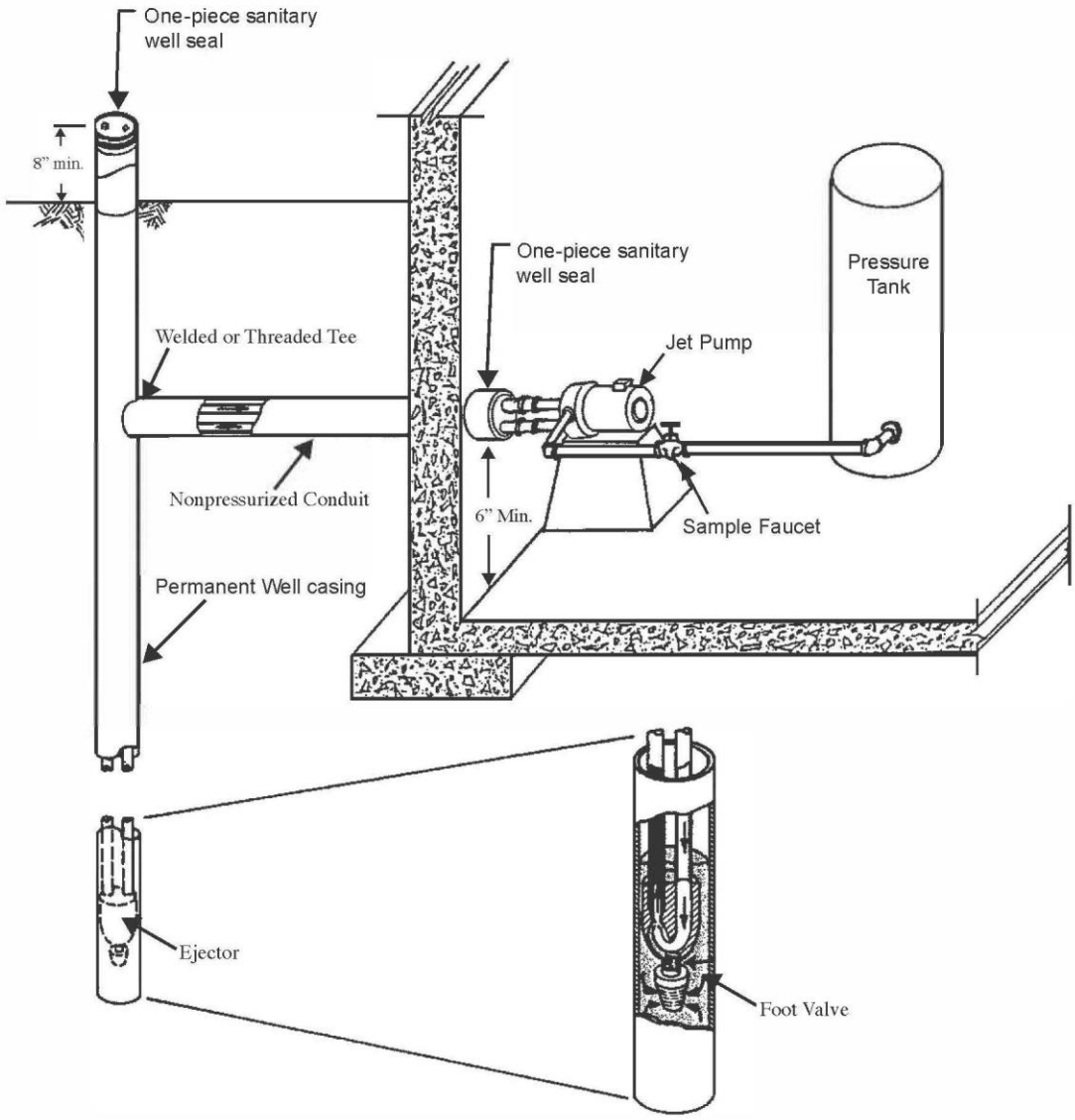

SECTION 194. NR 820.12 (10) and (Note), and (12) (Note) are amended to read:

NR 820.12 (10) "High capacity property" has the meaning specified in s. NR 812.07 (~~52~~51).

Note: s. NR 812.07 (~~52~~51) defines "high capacity property" to mean "one property on which a high capacity well system exists or is to be constructed."

(12) **Note:** s. NR 812.07 (53) defines "high capacity well system" to mean "one or more wells, drillholes, or mine shafts used or to be used to withdraw water for any purpose on one property, if the total pumping or flowing capacity of all wells, drillholes or mine shafts on one property is 70 or more gallons per minute based on the pump curve at the lowest system pressure setting, or based on the highest flow rate from a flowing well or wells."

SECTION 195. NR 845.04 (13) is repealed.

SECTION 196. NR 845.16 (4) is amended to read:

NR 845.16 (4) VARIANCES. The department may issue a variance under s. NR ~~812.04~~812.43 allowing the well construction or pump installation features of a private water system to vary from ch. NR 812 requirements if department approved conditions are met.

SECTION 197. EFFECTIVE DATE. This rule takes effect on the first day of the month following publication in the Wisconsin Administrative Register as provided in s. 227.22 (2) (intro.), Wis. Stats.

SECTION 198. BOARD ADOPTION. This rule was approved and adopted with germane modifications by the State of Wisconsin Natural Resources Board on January 22, 2020.

Dated at Madison, Wisconsin _____.

STATE OF WISCONSIN
DEPARTMENT OF NATURAL RESOURCES

BY _____
Preston D. Cole, Secretary