Chapter NR 141

GROUNDWATER MONITORING WELL REQUIREMENTS

NR 141.01 Purpose.
NR 141.03 Applicability.
NR 141.05 Definitions.
NR 141.055 Borehole protection.
NR 141.06 Soil testing.
NR 141.065 Well location.
NR 141.07 Well casing.
NR 141.09 Well screen.
NR 141.10 Tremie pipes and sealing procedures.
NR 141.11 Filter packs.
NR 141.13 Sealing requirements.
NR 141.15 Drilling methods and fluids.
NR 141.16 Cross contamination.
NR 141.17 Disposal and decontamination.
NR 141.19 Borehole diameter.
NR 141.20 Aquifer test or recovery wells.
NR 141.21 Well development.
NR 141.23 Well and borehole construction documentation.
NR 141.25 Abandonment requirements.
NR 141.27 Driven point wells.
NR 141.29 Temporary groundwater monitoring wells.
NR 141.31 Special circumstances and exceptions.

NR 141.01 Purpose. The purpose of this chapter is to establish minimum acceptable standards for the design, installation, construction, abandonment and documentation of groundwater monitoring wells. These rules are adopted under chs. 281, 160 and 227, Stats.

History: Cr. Register, January, 1990, No. 409, eff. 2−1−90; correction made under s. 13.93 (2m) (b) 7., Stats., Register, March, 2000, No. 531.

NR 141.03 Applicability. This chapter applies to all persons installing and abandoning groundwater monitoring wells and boreholes for purposes regulated by the department under ch. 160, 281, 283, 289, 291, 292, 293 or 299, Stats., or in permits, plan approvals, licenses or orders issued under those chapters. In addition, this chapter applies to all persons installing groundwater monitoring wells and boreholes in fulfillment of terms of a contract with the department. All wells and boreholes installed for purposes regulated by the department under this chapter shall be abandoned according to s. NR 141.25. All other wells and boreholes shall be abandoned according to the provisions of ch. NR 812.

Note: Additional requirements concerning soil testing and groundwater sampling are located in other chapters regulating wastewater and solid and hazardous waste disposal, see chs. NR 110, 206, 213, 214, 508, 512 and the 600 and 700 series.

History: Cr. Register, January, 1990, No. 409, eff. 2−1−90; am. Register, June, 1991, No. 426, eff. 7−1−91; correction made under s. 13.93 (2m) (b) 7., Stats., Register, September, 1995, No. 477; corrections made under s. 13.93 (2m) (b) 7., Stats., Register, March, 2000, No. 531.

NR 141.05 Definitions. In this chapter:

(1) "Air rotary drilling" means a drilling method whereby the borehole is advanced using a circular rotating action applied to a string of drilling rods which have a diffused discharge bit attached to the bottom of the rods. Pressurized air is forced through the drilling rods and cools the drilling tools and removes the cuttings from the borehole.

(2) "Annular space seal" means the following:

(a) For wells constructed with filter packs, it is the material placed above the top of the filter pack or the filter pack seal up to the surface seal and between the well casing and the adjacent formation; or

(b) For wells constructed into bedrock formations and without well screens, it is the material placed from the bottom of the enlarged borehole up to the surface seal, between the well casing and the adjacent formation.

(2m) "Aquifer test well" means a well installed to provide information on the hydraulic conductivity, transmissivity, storage coefficient, capture zone, specific capacity, radius of influence or other physical parameters of an aquifer, defined geologic unit, or water bearing formation through the imposition of a sustained stress on the aquifer by removal of water.

(3) "ASTM" means american society for testing and materials.

(5) "Bedrock" means the solid rock underlying any loose surficial material such as soil, alluvium or glacial drift. Bedrock includes but is not limited to limestone, dolomite, sandstone, shale and igneous and metamorphic rock.

(6) "Bentonite" means a clay consisting of at least 85% sodium montmorillonite. Bentonite is available in the following forms:

(a) "Bentonite powder" means 200 mesh pure bentonite, without additives.

(b) "Bentonite granules" means 8 mesh pure bentonite, without additives.

(c) "Bentonite pellets" means commercially manufactured tablets made by compressing pure bentonite, without additives, into forms greater than ¼″ in size.

(d) "Bentonite chips" means commercially processed angular fragments of pure bentonite, without additives.

(7) "Bentonite — cement grout" means a mixture with the ratio of 5 pounds of bentonite with 94 pounds of Portland cement and 8.5 gallons of water from a known safe and uncontaminated source.

(8) "Bentonite — fine sand slurry" means a mixture with the minimum ratio of 50 pounds of bentonite with 100 gallons of water from a known safe and uncontaminated source and 10−25% sand by volume for a mud weight of 11 pounds per gallon.

(9) "Borehole" means a circular hole deeper than it is wide, constructed in earth material for the purpose of either installing a well or obtaining geologic or groundwater related data. Boreholes are also referred to as drillholes.

(10) "Clay" means an inorganic soil with low permeability characteristics and a plasticity index of 7 or more.

(11) "Coarse sand" means a well sorted sand with a predominant grain size between 4.76mm and 2.0mm as established by the unified soil classification system.

(12) "Concrete" means a slurry mixture with a ratio of 94 pounds of cement, equal volumes of dry sand and gravel and 5 to 6 gallons of water from a known safe and uncontaminated source. The ratio of sand and gravel to cement may not exceed 3 parts to one.

(13) "Department" means the department of natural resources.

(14) "Driven point well" means a well constructed by joining a drive point with lengths of pipe and driving the assembly into the ground with percussion equipment or by hand, without first removing material below the 10 foot depth.

(15) "Filter pack" means the sand, gravel or both placed in direct contact with the well screen.

(16) "Filter pack seal" means the sealing material placed in the annular space above the filter pack and below the annular

space seal to prevent the migration of annular space sealant into the filter pack.

(17) "Fine sand" means a well sorted sand with a predominant grain size between .42mm and .074mm, as established by the unified soil classification system.

(18) "Granular bentonite slurry" means a thoroughly blended mixture of up to 30 pounds of untreated bentonite powder added to 100 gallons of water from a known safe and uncontaminated source with a minimum of 100 pounds of untreated bentonite granules mixed together by a Venturi−hopper mud mixer or other equivalent high shear mixer.

(19) "Gravel" means an unconsolidated material with the predominant grain size being between 76.2mm and 4.76mm, as established by the unified soil classification system.

(20) "Groundwater" means any waters of the state, as defined in s. 281.01 (18), Stats., occurring in a saturated geologic formation of rock or unconsolidated material.

(21) "Groundwater monitoring well" means any cased excavation or opening into the ground made by digging, boring, drilling, driving, jetting or other methods for the purpose of determining the physical, chemical, biological or radiological properties of groundwater. Groundwater monitoring wells may be piezometers, water table observation wells or both.

(21m) "High−solids grout" means a thoroughly blended mixture of water from a known safe and uncontaminated source with untreated bentonite, without additives, which has been approved by the department.

(22) "Hollow stem auger drilling" means a drilling method where continuous flighting is welded to a hollow stem pipe. The flighting carries drill cuttings to the surface as the flighting is rotated and pushed down into the earth.

(23) "Inside diameter" means the horizontal distance between the inner walls of a well casing, hollow stem auger or tremie pipe.

(24) "Medium sand" means a well sorted sand with a predominant grain size between 2.0mm and .42mm, as established by the unified soil classification system.

(25) "Montmorillonite" means a group of expanding lattice clay minerals of the general formula: $R._{33}Al_2Si_40_{10}(OH)_2 \circ H_2O$, where R means one or more cations of sodium, potassium, magnesium or calcium and where Al means aluminum, Si means silicon, O means oxygen and H means hydrogen.

(26) "Mud rotary drilling" means a drilling method whereby a borehole is advanced by using a circular rotating action applied to a string of drilling rods which have a diffused discharge bit attached to the bottom of the string. A bentonite and water mud slurry is used to provide borehole stability, to cool the bit and to carry cuttings to the ground surface.

(27) "Neat cement grout" means a slurry mixture with a ration of 94 pounds of Portland cement mixed with 5 to 6 gallons of water from a known safe and uncontaminated source.

(28) "Percussion drilling" means a drilling method using a cable tool drilling machine or a drilling method whereby the permanent or temporary well casing is driven, or is set into a borehole and then driven.

(29) "Permanent groundwater monitoring well" means any groundwater monitoring well in place for 60 days or longer.

(30) "Piezometer" means a groundwater monitoring well, sealed below the water table, installed for the specific purpose of determining either the elevation of the potentiometric surface or the physical, chemical, biological or radiological properties of groundwater at some point within the saturated zone or both.

(31) "Potentiometric surface" or "piezometric surface" means an imaginary surface representing the total head of groundwater and is the level to which water will rise in a well.

(32) "Psi" means pounds per square inch.

(33) "Purge" means an action that removes water from the well, commonly accomplished by using a pump or bailer.

(33m) "Recovery well" means a well intended and designed to capture and remove contaminated groundwater or non−aqueous phase liquids from the subsurface.

(34) "Rotary wash drilling" means a drilling method whereby metal temporary casing is advanced into the borehole by driving. At selected intervals, the temporary casing is cleaned out using rotary drilling tools by pumping clean water through the rod to flush out accumulated cuttings. This drilling method is also known as wash bore or wash down drilling.

(35) "Sand−cement grout" means a mixture of cement, sand and water in the proportion of 94 pounds of Portland cement, one cubic foot of dry sand and 5 to 6 gallons of water from a known safe and uncontaminated source.

(36) "Sediment" means any solid material dropping from suspension in water, including clay, silt, sand and gravel sized particles.

(37) "Solid stem auger drilling" means a drilling method where continuous flighting is welded onto a solid stem pipe. The flighting carries drill cuttings to the surface as the flighting is rotated and pushed down into the earth. The borehole is created by a cutting bit located at the tip of the lead auger.

(38) "Specific gravity" means the weight of a particular volume of substance compared to the weight of an equal volume of water at a reference temperature.

(39) "Surge" means an action causing water to move rapidly in and out of the well screen, thereby removing fine material from the surrounding aquifer.

(40) "Temporary groundwater monitoring well" means any groundwater monitoring well in place for less than 60 days.

(41) "Top of bedrock" or "top of firm rock" means at least 70% of the drill cuttings being either:

(a) Angular rock fragments, as in the case of crystalline rock; or

(b) Rock fragments composed of individual grains or rock particles that are cemented together to form an aggregate as opposed to a single sediment particle.

(42) "Tremie pipe" means a pipe or hose used to install well construction materials in an annular space or a borehole.

(43) "Unconsolidated material" means that material found above firm bedrock, composed of single sediment particles, individual grains or rock fragments. Unconsolidated material includes but is not limited to clay, silt, sand, gravel, loess, peat and organic soil.

(44) "Unified soil classification system" means the soil designation system based on the physical properties of the soil developed from the airfield classification system in 1952 and adopted by the American society for testing and materials in standard test method D2487−83.

Note: A copy of this publication is available for inspection at the offices of the department of natural resources, the secretary of state, and the legislative reference bureau and may be obtained for personal use from the American Society for Testing and Materials, 1916 Race Street, Philadelphia, Pennsylvania 19103.

(45) "Water table" means the surface of unconfined groundwater where the water pressure is equal to atmospheric pressure.

(46) "Water table observation well" means any groundwater monitoring well, in which the screen or open borehole intersects a water table, which is installed for the specific purpose of determining either the elevation of the water table or the physical, chemical, biological or radiological properties of groundwater at the water table or both.

Note: Construction of a typical water table observation well is depicted in Figure 1.

(47) "Well" means any borehole or other excavation or opening in the ground deeper than it is wide constructed for the purpose of obtaining or monitoring groundwater.

(48) "Well depth" means the distance from the ground surface to the bottom of the well screen or to the bottom of the open hole when a well screen is not used.

(49) "Well volume" means the volume of water contained in the well casing and the filter pack.

History: Cr. Register, January, 1990, No. 409, eff. 2−1−90; am. (7), (8) and (18), cr. (2m), (21m) and (33m), Register, June, 1991, No. 426, eff. 7−1−91; correction in (20) made under s. 13.93 (2m) (b) 7., Stats., Register, March, 2000, No. 531.

NR 141.055 Borehole protection. If a borehole is left open, protective measures shall be taken to prevent the borehole from acting as a conduit for contamination or becoming a safety hazard.

History: Cr. Register, January, 1990, No. 409, eff. 2−1−90.

NR 141.06 Soil testing. Specific soil sampling and testing procedures are specified in other chapters related to wastewater and solid and hazardous waste disposal facilities.

Note: See chs. NR 110, 206, 214, 508, 512, and 660 to 679.

History: Cr. Register, January, 1990, No. 409, eff. 2−1−90.

NR 141.065 Well location. (1) Monitoring wells installed where prior department approval is required shall be installed at the locations indicated on plans and specifications approved by the department prior to installation.

(2) Following installation of the wells, an as−built plan map shall be submitted specifying the exact vertical and horizontal location of the wells. All monitoring well locations shall be reported to the department on a plan map drawn to a specific scale. The map shall indicate structure boundaries, property boundaries, any nearby surface waters and a north arrow. The plan shall show the wells in relation to each other, to property and structure boundaries, and to a common reference point on a horizontal grid system. The origin of the grid system shall be located according to latitude and longitude or according to the state plane coordinate system. The exact vertical location of the top of the well casing shall be referenced to the nearest benchmark for the national geodetic survey datum to an accuracy of 0.01 feet. This plan map shall show the exact location of the installed well on a horizontal grid system which is accurate to within one foot. Direction of groundwater flow shall be indicated. In addition, an 8.5−inch by 11−inch site map drawn to scale according to the horizontal grid system shall be submitted showing the location of wells and structures on the site.

(3) The well casings for wells constructed in a floodplain or floodway shall terminate a minimum of 2 feet above the regional flood elevation for the well site.

History: Cr. Register, January, 1990, No. 409, eff. 2−1−90; am. (2), Register, June, 1991, No. 426, eff. 7−1−91.

NR 141.07 Well casing. (1) SPECIFICATIONS. All permanent groundwater monitoring wells shall be constructed of new polyvinyl chloride (PVC) well casing materials except in situations where the rock, soil or groundwater may react with PVC, in which case an approval under s. NR 141.31 for alternative materials shall be requested. All PVC casing materials shall meet national sanitation foundation standard 14 and ASTM D1785 specifications for any one of the following cell classifications: 12454−B, 12454−C, 11443−B, 14333−D, 13233 or 15223−B. All casing shall have a minimum inside diameter of 1.9 inches. In unconsolidated geologic formations, all wells less than or equal to 100 feet in depth shall be constructed of at least schedule 40 PVC casing and all wells greater than 100 feet in depth shall be constructed of at least schedule 80 PVC casing. Groundwater monitoring wells shall be installed with well casing no larger than a 4−inch inside diameter. Groundwater monitoring wells shall have a vented cap except as provided in s. NR 141.13 (4) (b).

(2) REFERENCE. The listed national sanitation foundation and ASTM references are available for inspection at the offices of the department of natural resources, the secretary of state, and the legislative reference bureau and may be obtained for personal use from the National Sanitation Foundation, 3475 Plymouth Road, P.O. Box 1468, Ann Arbor, Michigan 48106, and the American Society for Testing and Materials, 1916 Race Street, Philadelphia, Pennsylvania 19103.

(3) ASSEMBLY AND INSTALLATION. All casing couplings shall be constructed of flush threaded joints. Solvent welded joints may not be used without prior written approval by the department. The casing shall be centered in the borehole.

(4) INSPECTION. Prior to use, the casings and couplings shall be inspected for cuts, deformations, gouges, deep scratches, damaged ends and other imperfections. Any casing or coupling having such a defect may not be used.

History: Cr. Register, January, 1990, No. 409, eff. 2−1−90; am. (1), Register, June, 1991, No. 426, eff. 7−1−91; correction in (2) made under s. 13.92 (4) (b) 6., Stats., Register March 2011 No. 663.

NR 141.09 Well screen. (1) SPECIFICATIONS. All permanent groundwater monitoring well screens shall be constructed of material which is nonreactive with the constituents in soils and groundwater at the monitoring location. The well screen may not be hand cut and may not be wrapped with filter cloth. The well screen slot size shall be sized to retain at least 90% of the grain size of the collapsed formation, based on a sieve analysis, when collapsed formation is used as filter pack material or at least 90% of the grain size of the filter pack, based on a sieve analysis, if material other than collapsed formation is used. Well screens on water table observation wells may not exceed 15 feet in length. Well screens on piezometers installed for the purpose of determining the elevation of the potentiometric surface may not exceed 5 feet in length.

Note: Well screens for wells other than the water table observation wells and piezometers identified above may vary in length.

(2) ASSEMBLY AND INSTALLATION. All well screens shall be permanently joined to the well casing by flush threaded joints. All joints shall be watertight. All well screens shall be centered in the borehole. Monitoring wells installed in bedrock using an open borehole may be constructed without a well screen.

Figure 1.
Typical water table observation well and piezometer construction details.

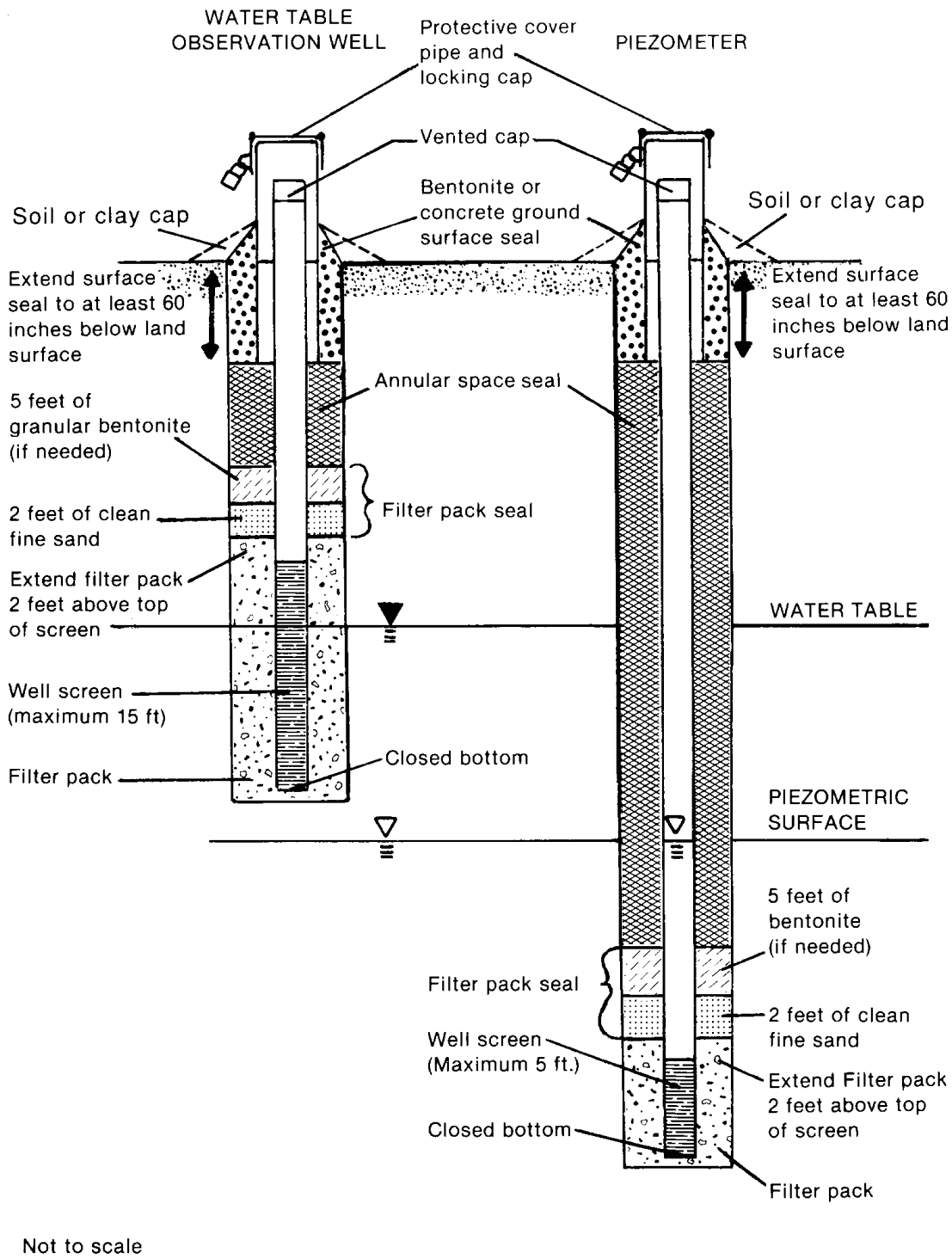

History: Cr. Register, January, 1990, No. 409, eff. 2−1−90; am. (1), Register, June, 1991, No. 426, eff. 7−1−91.

NR 141.10 Tremie pipes and sealing procedures. **(1)** MATERIALS. The tremie pipe used for the placement of sealant materials shall be one of the following materials:

(a) Metal pipe,

(b) Rubber−covered hose reinforced with braided fiber or steel and rated for at least 300 psi, or

(c) Thermoplastic pipe rated for at least 100 psi including:

1. Polyvinyl chloride (PVC)
2. Chlorinated polyvinyl chloride (CPVC),
3. Polyethylene (PE),
4. Polybutylene (PB), and
5. Acrylonitrite butadiene styrene (ABS).

(2) PROCEDURES. This subsection describes department approved sealant placement methods when a tremie pipe is used.

(a) The estimated and actual volume of sealing material used shall be calculated and reported to the department.

(b) The sealant material shall be placed in one continuous operation in such a manner as to not disturb the integrity of the filter pack and seal.

(c) When a tremie pipe is used, the bottom end shall be kept submerged in the sealant material throughout the sealing process.

(d) The sealant material shall be brought up to the ground surface seal. The density of the sealant material in the annular space or borehole at the bottom of the ground surface seal shall be the same as the density of the sealant material being placed. Any settling of the sealant material shall be topped off.

(e) Tremie pipe — gravity. As depicted in Figure 2, sealing material may flow by gravity through a funnel or hopper connected to a tremie pipe. The tremie pipe shall be lowered to the bottom of the annular space or borehole to be sealed and the sealing material placed from the bottom up. The end of the tremie pipe shall be kept submerged in the grout or slurry at all times.

(f) Tremie pipe — pumped. As depicted in Figure 3, the sealing material shall be placed by a pump through a tremie pipe into the annular space or borehole. Tremie pipes used for the placing of pumped slurry or grout shall be fitted with a J−hook end or a closed end with side discharge ports.

Note: The J−hook end or closed end with side discharge ports of the tremie pipe will direct the flow of the materials to the side or upward

Figure 2.
Conductor (tremie) pipe — gravity method

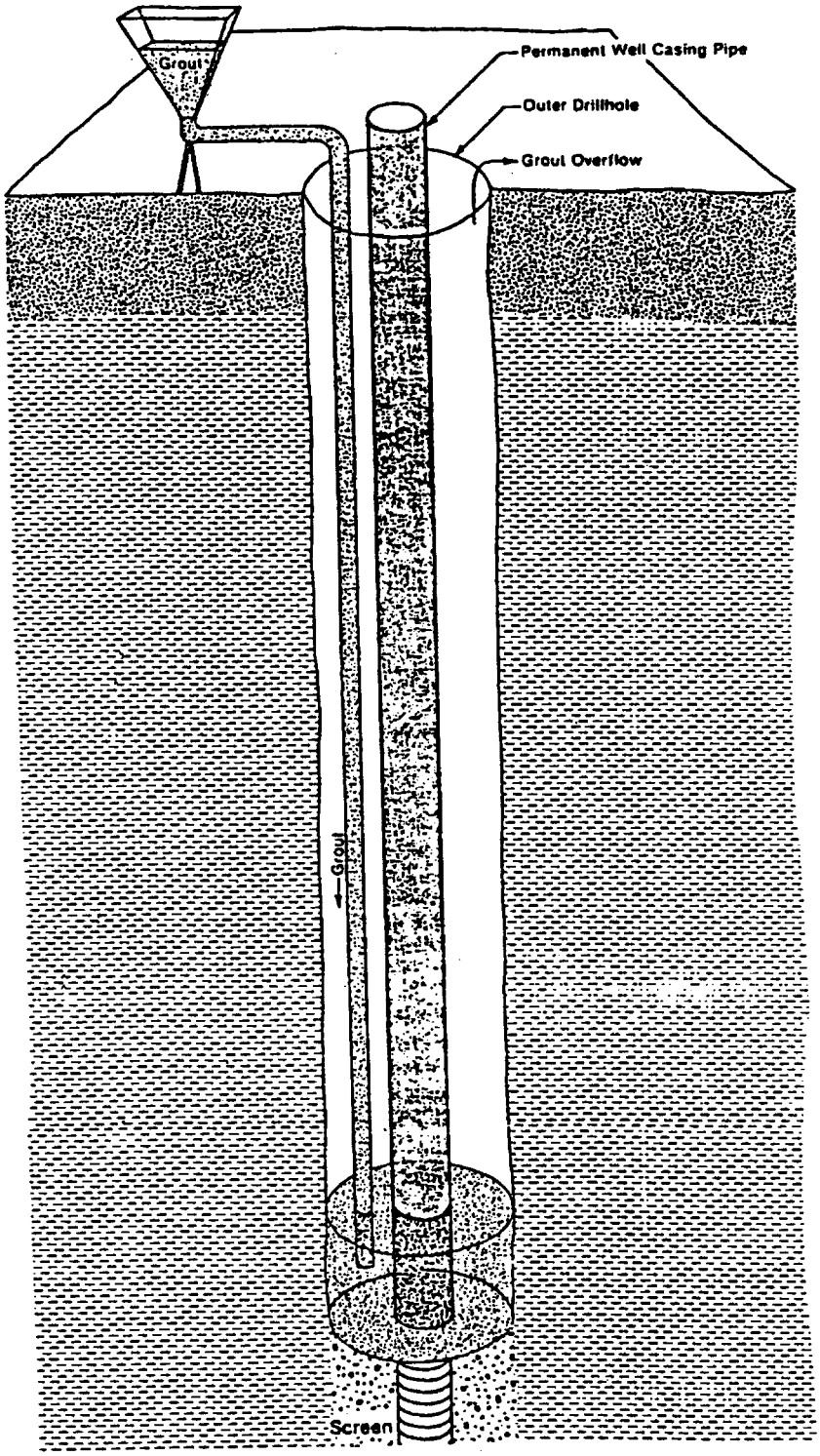

Figure 3.
Conductor (tremie) pipe — pumped method

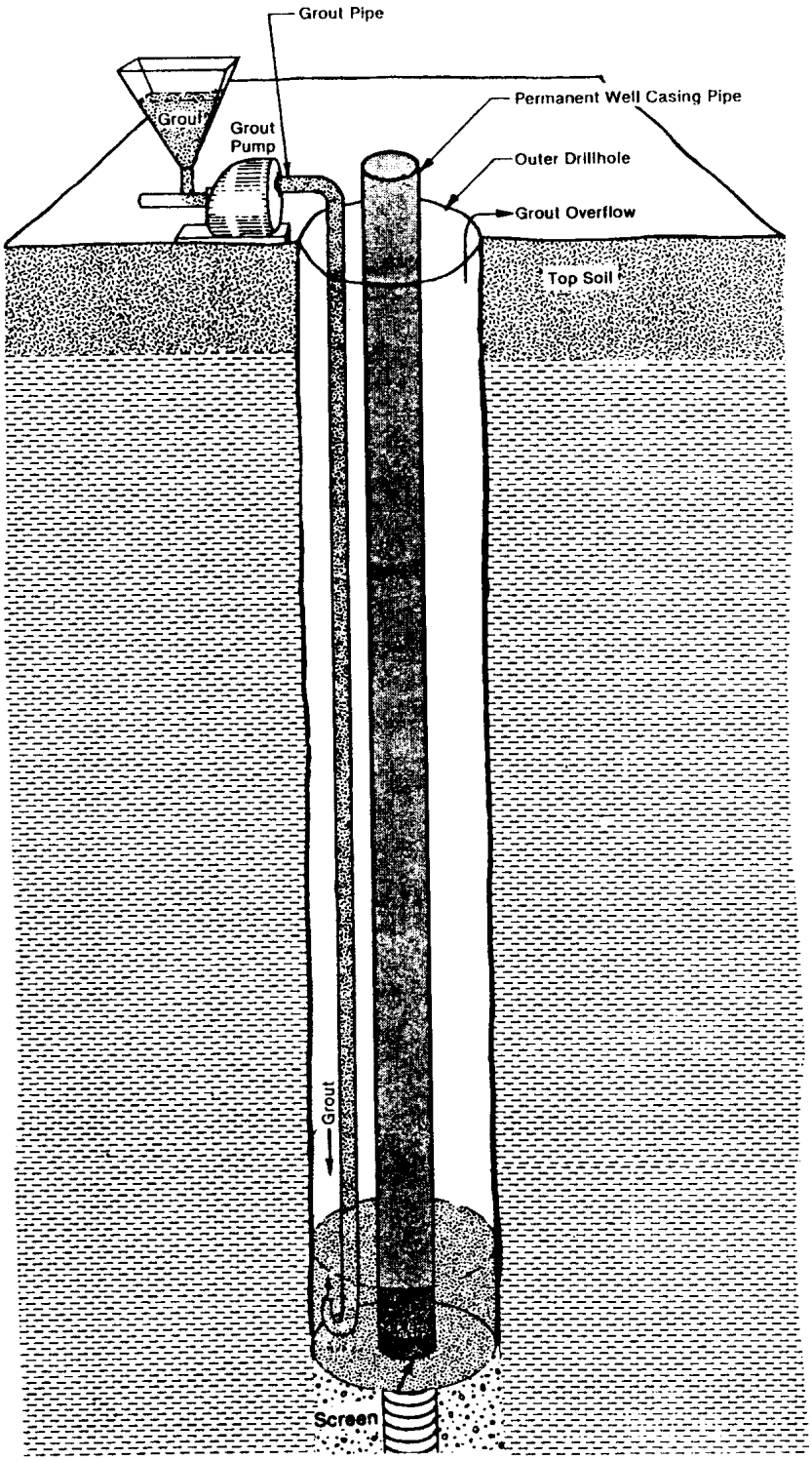

History: Cr. Register, January, 1990, No. 409, eff. 2−1−90; am. (2) (d) and (f), Register, June, 1991, No. 426, eff. 7−1−91.

NR 141.11 Filter packs. All permanent groundwater monitoring wells installed in unconsolidated material and used for the collection of water quality samples shall be constructed with filter packs. Permanent groundwater monitoring wells installed in bedrock may be constructed with filter packs. When used, the filter pack shall be the only material in contact with the well screen. The estimated and actual volume of filter pack material used shall be calculated and reported to the department. All com-

mercially prepared filter packs installed in permanent groundwater monitoring wells shall meet the requirements in sub. (1). All other filter packs shall meet the requirements in sub. (3).

(1) SPECIFICATIONS. The filter pack shall be a well sorted, silica based sand or gravel. The sand or gravel used for filter packs shall be hard and durable and shall have an average specific gravity of not less than 2.50. The sand and gravel shall be visibly free of clay, dust and micaceous and organic matter. Not more than 5% of the sand or gravel shall be soluble in a 10% hydrochloric acid solution. Thin, flat or elongated pieces of gravel, the maximum dimension of which exceeds 3 times the minimum dimension, may not constitute more than 2% of the material by weight. The filter pack for wells installed in unconsolidated material shall be sized to retain at least 50% of the surrounding formation based on a sieve analysis. In formations which are predominantly silt and clay, the filter pack shall be a fine sand. In bedrock, the filter pack shall be a medium or coarse sand or gravel. Crushed limestone, dolomite or any material containing clay or any other material that will adversely impact on the performance of the monitoring well may not be used as filter pack.

(2) INSTALLATION. The filter pack shall extend from 6 inches beneath the bottom of the well to 2 feet above the top of the well screen. For water table observation wells constructed in areas where the depth to water table is less than 7 feet, the required filter pack height above the top of the well screen may be reduced to 6 inches to allow for the required amount of annular space sealant to be placed. To ensure that the filter pack is installed evenly surrounding the well screen and casing over the proper depth interval, a tape measure, measuring rod or similar device shall be used to measure the height of the filter pack. The tape measure, measuring rod or similar device shall be carefully raised and lowered while the filter pack is being installed to identify bridging. If bridging occurs the filter pack material shall be tamped into place, surrounding the well screen and casing, using a measuring rod or similar device.

(3) COLLAPSED FORMATION. Collapsed formation may be used as filter pack material if the collapsed formation will limit the passage of formation fines into the well screen and either an artificial filter pack cannot be installed or the formation grain size is greater than or equal to fine sand sized grains. The grain size distribution of the collapsed formation shall be such that at least 90% of the formation will be retained by the well screen based on a sieve analysis. Analysis of the collapsed formation for specific gravity and particle size shall be performed and documentation shall be submitted to the department to support its use as an acceptable filter pack. Following review of the submitted information, the department may require new well construction if the collapsed formation analysis is not consistent with the filter pack specifications.

History: Cr. Register, January, 1990, No. 409, eff. 2−1−90; am. (1) to (3), Register, June, 1991, No. 426, eff. 7−1−91.

NR 141.13 Sealing requirements. All materials and procedures used in the installation of seals for permanent groundwater monitoring wells shall meet the requirements of this section. The calculated and actual volume of sealant material used for the filter pack seal and annular space seal shall be reported to the department.

(1) FILTER PACK SEAL. (a) *Specifications.* All permanent groundwater monitoring wells installed with filter packs shall be constructed with a filter pack seal. For all water table observation wells and piezometers, the filter pack seal shall extend 2 feet upward from the top of the filter pack and shall consist of 2 feet of clean fine sand. When high−solids grout, granular bentonite slurry, bentonite−cement grout or neat cement grout is used as the annular space sealant, 5 feet of bentonite shall be placed on top of the clean fine sand seal. Bentonite chips no greater than 3/8 inch in diameter or bentonite pellets shall be used for seals placed below the water table. Bentonite granules may be used for seals when there is no standing water above the filter pack and the borehole is less than 25 feet or in areas where the depth to water table is less than 7 feet. For water table observation wells constructed in areas where the depth to water table is less than 16 feet, the filter pack seal shall be reduced to 2 feet of bentonite to allow for the required amount of annular space sealant to be placed. For water table observation wells constructed in areas where the depth to water table is less than 7 feet, the required filter pack seal may be reduced to allow for the required amount of annular space sealant to be placed.

(b) *Installation.* A tape measure, measuring rod or similar device shall be used to ensure that the filter pack seal is installed over the proper depth interval. The tape measure, measuring rod or similar device shall be carefully raised and lowered while the filter pack seal material is being placed to identify bridging. If bridging occurs the filter pack seal material shall be tamped into place, surrounding the well casing, using a measuring rod or similar device. When a tremie pipe is used to place the filter pack seal the procedures of s. NR 141.10 (2) shall be followed. Bentonite pellets, bentonite chips or bentonite granules shall be hydrated in 2 foot lifts as placed in the borehole when placed above the water table.

(2) ANNULAR SPACE SEAL. (a) *Specifications.* All permanent groundwater monitoring wells shall be installed with an annular space seal designed to achieve a permeability of 1 x 10−7 centimeters per second or less. For permanent groundwater monitoring wells constructed with filter packs, the annular space seal shall extend from the filter pack seal to the ground surface seal and shall be at least 2 feet in length. For water table observation wells constructed in areas where the depth to water table is less than 7 feet, the annular space seal shall be bentonite granules. For monitoring wells constructed into bedrock formations and without well screens, the annular space seal shall extend from the bottom of the outer borehole to the ground surface seal and shall be at least 2 feet in length. Sealant materials may not contain additives. These requirements may be met by:

Note: The department does not recommend the use of neat cement grout or cement mixtures in fractured formations because they may impact water quality.

1. Bentonite granules slurry may be used as an annular space sealant in any type of monitoring well except where the depth to the water table is less than 7 feet.

2. Bentonite sand slurry may be used as an annular space sealant in any type of monitoring well except where the depth to the water table is less than 7 feet.

3. Bentonite pellets, bentonite chips or bentonite granules may be used to seal the annular space under the following conditions:

a. Bentonite granules may be used when there is no standing water in the well above the filter pack and the total well depth is less than 25 feet or the depth to water table is less than 7 feet.

b. Bentonite chips with diameter no larger than 3/8 inch or bentonite pellets may be used when the depth of standing water in the well is less than 30 feet and the total depth of the annular space seal is less than 50 feet except where the depth to the water table is less than 7 feet.

4. High−solids grout approved by the department, bentonite−cement grout or neat−cement grout may be used to seal the annular space in which a bentonite filter pack seal has been placed except where the depth to the water table is less than 7 feet.

(b) *Installation.* 1. When bentonite chips with diameter no larger than 3/8 inch, bentonite pellets or granules are used to seal the annular space, they may either be poured freely down the borehole or added through a tremie pipe, provided the specifications of par. (a) are met. When a tremie pipe is used to place the annular space sealant the procedures of s. NR 141.10 (2) (a) and (b) shall be followed.

2. When grouts or slurries are used to seal the annular space, the material may be poured freely down a tremie pipe or pumped down a borehole with the use of a tremie pipe, provided the speci-

fications of par. (a) are met. For wells 100 feet in depth or greater the sealant material shall be pumped down the borehole with the use of a tremie pipe. When a tremie pipe is used to place the annular space sealant the procedures of s. NR 141.10 (2) shall be followed.

3. When any slurry or grout is used, there shall be a 12−hour period between the time the annular space seal is installed and the time the protective cover pipe is installed. Any settling in the annular space seal shall be topped off before the protective cover pipe is installed.

4. The top of the well casing shall be covered with a protective cap.

(3) GROUND SURFACE SEAL AND PROTECTIVE COVER PIPE. (a) *Ground surface seal.* All permanent groundwater monitoring wells shall be constructed with a bentonite or concrete ground surface seal. The ground surface seal shall extend to a minimum of 60 inches below the land surface, and the top shall be sloped away from the well casing. If bentonite is used, the top of the surface seal shall terminate 2 inches below the land surface and shall be covered with top soil or native soil to prevent drying out. The ground surface seal shall be installed around the protective cover and may not be placed between the protective cover pipe and the well casing. If the monitoring well depth is such that both a minimum 2 foot annular space seal and a minimum 5 foot ground surface seal cannot both be placed, the ground surface seal may be shortened.

Note: Certain soils are prone to frost heave and the department does not recommend use of concrete as a ground surface seal in these situations.

(b) *Protective cover pipe.* The protective cover pipe shall consist of a metal casing at least 2 inches larger in diameter than the well casing with a locking cap. The protective cover pipe shall extend from the bottom of the ground surface seal to a minimum of 24 inches above the ground surface except as provided in sub. (4). There may be no more than 4 inches between the top of the well casing and the top of the protective cover pipe. The protective cover pipe shall always extend above the top of the well casing. For water table observation wells constructed in areas where the depth to water table is less than 7 feet, the required length of protective cover shall be reduced and may not extend through the annular space seal or into the filter pack. If the monitoring well is located in a floodplain, the protective cover pipe shall be watertight. The department may require additional protective devices, such as rings of brightly colored posts around the well, as necessary. Weep holes or vents may be used in protective cover pipes.

(4) GROUND SURFACE SEAL AND FLUSH MOUNTED PROTECTIVE COVER PIPE. (a) *Ground surface seal.* All permanent groundwater monitoring wells with a flush mounted protective cover pipe shall be constructed with a concrete ground surface seal. The ground surface seal shall extend to, but not beyond, the total depth of the flush mounted protective cover pipe. The ground surface seal shall be installed around the flush mounted protective cover pipe and may not be placed between the flush mounted protective cover pipe and the well casing.

(b) *Flush mounted protective cover pipe.* The flush mounted protective cover pipe may be installed only in high vehicular traffic areas and may not be installed in areas subject to ponding or flooding. The flush mounted protective cover's lid shall have the wording "monitoring well" on its outer surface. Flush mounted protective cover pipes shall be installed through an impervious surface such as asphalt or concrete. If an impervious surface does not exist one shall be created which will support the weight of the traffic in the area. The flush mounted protective cover pipe shall consist of a watertight metal casing with an inside diameter at least 4 inches greater than the inside diameter of the monitoring well casing. The flush mounted protective cover pipe shall be one continuous metal piece or 2 metal pieces which are joined with a continuous weld. The flush mounted protective cover pipe shall be a minimum of 12 inches in length. There may be no more than 8 inches between the top of the monitoring well casing and the top of the flush mounted protective cover pipe after installation. The flush mounted protective cover pipe shall have an exterior flange or lugs. The flush mounted protective cover pipe may not extend beyond the annular space seal. The flush mounted protective cover pipe or the monitoring well shall have a locking mechanism. The monitoring well installed within any flush mounted protective cover pipe shall have a watertight cap.

Note: Figure 4 depicts 2 typical flush mounted protective cover pipes after installation.

Note: An exterior flange or lugs will aid in the stabilization of the flush mounted protective cover pipe within the ground surface seal.

Note: After removing the watertight cap and prior to taking a pressure head measurement a waiting period is recommended to enable the water level to stabilize.

Figure 4.

Two typical flush mounted protective cover pipes after installation.

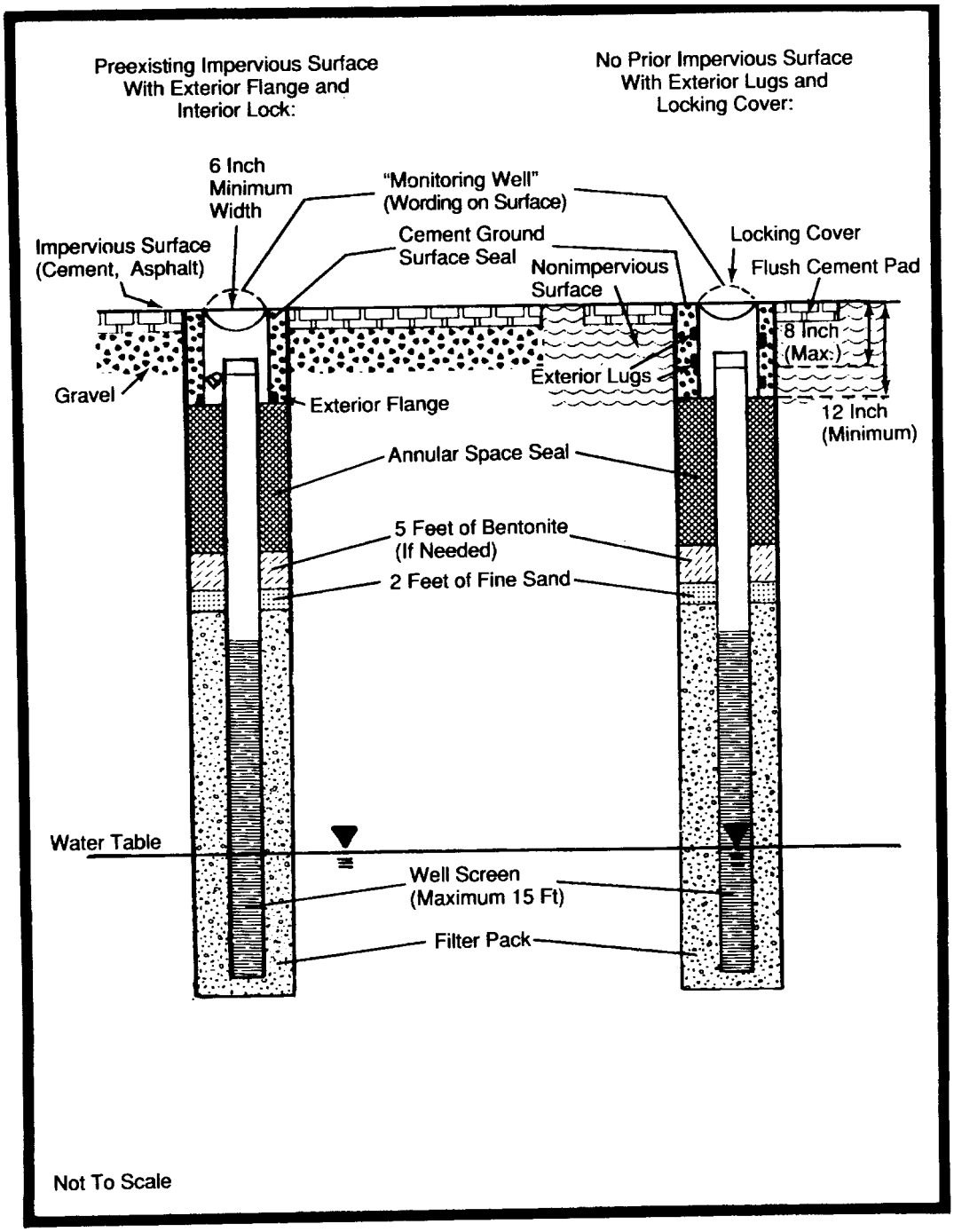

History: Cr. Register, January, 1990, No. 409, eff. 2–1–90; am. (1), (2) (a) (intro.), 1., 2. and 3. and (b) 1. and 4. and (3), r. and recr. (2) (a) 4., r. (2) (a) 5. and 6., cr. (4), Register, June, 1991, No. 426, eff. 7–1–91.

NR 141.15 Drilling methods and fluids. The drilling method shall introduce the least possible amount of foreign material into the borehole, produce the least possible disturbance to the formation and permit the proper construction and development of the required diameter well. Only air, water from a known safe source free of bacterial and chemical contamination or bentonite drilling muds, mixed with water from a known safe and uncontaminated source, may be used as drilling fluids. The water used for drilling shall be stored in such a manner as to prevent contamination of the clean water. The department may require chemical analysis of the water used to produce drilling fluids. Hammer drill lubricants, used with air rotary drill rigs, may not be used for installing groundwater monitoring wells. If air is used as a drilling fluid, the air shall be filtered by a coalescing air filter. If water is

used, the source of the water shall be reported. Drilling fluid additives may not be used without prior written department approval.

History: Cr. Register, January, 1990, No. 409, eff. 2−1−90.

NR 141.16 Cross contamination. Precautions shall be taken to prevent cross contamination of aquifers or uncontaminated zones.

History: Cr. Register, June, 1991, No. 426, eff. 7−1−91.

NR 141.17 Disposal and decontamination. (1) All drill cuttings and fluids and surge and wash waters from borehole and groundwater monitoring well construction and development shall be disposed of in a manner approved by the department.

(2) All borehole and groundwater monitoring well construction and development equipment shall be decontaminated by washing and triple rinsing or high pressure heat cleaning to prevent cross−contamination of boreholes or groundwater monitoring wells.

History: Cr. Register, January, 1990, No. 409, eff. 2−1−90.

NR 141.19 Borehole diameter. (1) BOREHOLES IN UNCONSOLIDATED GEOLOGIC FORMATION. For all permanent groundwater monitoring wells in unconsolidated geologic formations, the borehole diameter shall meet the following requirements:

(a) If hollow stem augers are used, their inside working diameter shall be at least 2 ¼ inches greater than the inside diameter of the permanent well casing.

(b) If solid stem augers are used, their outside diameter shall be at least 4 inches greater than the inside diameter of the permanent well casing.

(c) If an air or mud rotary method is used, the borehole diameter shall be at least 4 inches greater than the inside diameter of the permanent well casing. If a temporary outer casing is used, the inside diameter of the temporary outer well casing shall be at least 4 inches greater than the inside diameter of the permanent well casing. The temporary outer casing shall be pulled as the annular space is being sealed.

Note: The dual−tube or triple−tube reverse rotary systems are rotary methods.

(d) If percussion methods, including the rotary wash, wash down and wash bore methods, with a temporary outer casing are used, in unconsolidated geologic formations, the inside diameter of the temporary outer casing shall be at least 4 inches greater than the inside diameter of the permanent well casing. The temporary outer casing shall be removed during the sealing of the annular space.

(2) BOREHOLES IN BEDROCK GEOLOGIC FORMATIONS. For all permanent groundwater monitoring wells installed deeper than 2 feet past the top of the bedrock, the borehole diameter shall meet the following requirements:

(a) If an air or mud rotary method is used to construct the monitoring well, the requirements of sub. (1) (c) shall be followed.

(b) If percussion methods are used to construct the monitoring well, the requirements of sub. (1) (d) shall be followed.

History: Cr. Register, January, 1990, No. 409, eff. 2−1−90.

NR 141.20 Aquifer test or recovery wells. The installation, location and construction of any aquifer test well or recovery well installed for a purpose regulated by the department under ch. 160, 281, 285, 289, 291, 292, 293, or 299, Stats., shall be approved by the department program responsible for overseeing work at the site prior to installation. Unless another time period is specified by law, the department shall complete its review and make a determination on all applications for approval within 65 business days after receipt of the complete application for approval. Applications may be included with other submittals for work to be performed at the site. The start of the 65 day review period will not begin until a complete application is received by the department. All requests for approval shall be in writing, except that for situations that require immediate response, an approval may be requested verbally and an advanced verbal approval may be granted by the department and followed up with a written confirmation. Aquifer test wells or recovery wells may be used for pressure head monitoring or water quality monitoring only with the approval of the department. All aquifer test and recovery wells shall be abandoned according to s. NR 141.25 and documented according to s. NR 141.23.

Note: See ch. NR 812 for additional requirements that apply to aquifer test wells and recovery wells.

History: Cr. Register, June, 1991, No. 426, eff. 7−1−91; corrections made under s. 13.93 (2m) (b) 7., Stats., Register, March, 2000, No. 531.

NR 141.21 Well development. All permanent groundwater monitoring wells shall be developed according to the requirements of section. Wells sealed with grout or slurry shall be developed after a minimum waiting period of 12 hours after installation is completed. The goal of well development is to produce water free of sediment and all drill cuttings and drilling fluids.

(1) WELLS THAT CANNOT BE PURGED DRY. All permanent groundwater monitoring wells that cannot be purged dry shall be developed by the following procedure:

(a) Alternately surge and purge the well for a minimum of 30 minutes. The surge and purge cycle shall consist of several minutes of surging followed by several minutes of purging to remove the material collecting in the bottom of the well. The surging shall move formation water in and out of the well screen. The surging shall be accomplished by using either a bailer or surge block or by pumping the well sufficiently to cause a drawdown and then allowing the well to recover and repeating the process.

Note: When a surge block is used, care should be taken to avoid drawing the annular space seal material into the filter pack or well screen.

(b) After the final surge and purge cycle is completed, the well shall be pumped or bailed until 10 well volumes of water are removed or until the well produces sediment free water. If sediment free water is not obtained any remaining sediment shall be removed from the bottom of the well. Well volume shall be calculated in the following manner:

$V_1 + V_2$ = well volume

V_1 = volume of water in well casing

$$V_1 = \Pi\left(\frac{D}{2}1\right)^2 H_1$$

V_2 = volume of water in filter pack

$$V_2 = N\,\Pi\,H_2\left[\left(\frac{D}{2}3\right)^2\left(\frac{D_2}{2}\right)^2\right]$$

N = porosity of filter pack

D_1 = inside diameter of well casing

D_2 = outside diameter of well casing

D_3 = diameter of borehole

H_1 = height of water column

H_2 = length of sand used in filter pack and fine sand filter pack seal or the height of the water column in water table observation wells.

Note: There are 7.48 gallons per cubic foot.

H_1 = height of water column

H_2 = length of filter pack or the height of the water column in water table observation wells.

CALCULATION OF WELL VOLUME

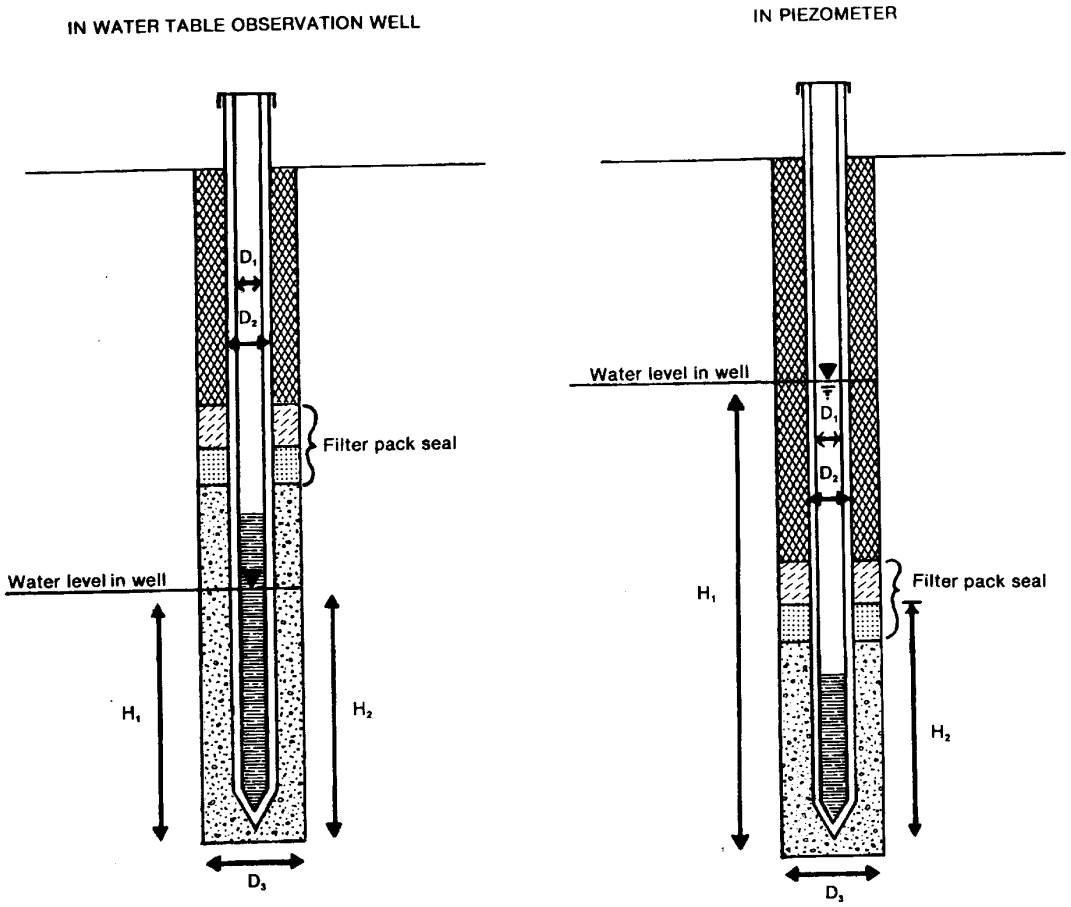

(2) WELLS THAT CAN BE PURGED DRY. All permanent groundwater monitoring wells that can be purged dry shall be developed in a manner which limits agitation by slowly purging the well dry. Wells which can be purged dry may not be surged and no water may be added to the well.

History: Cr. Register, January, 1990, No. 409, eff. 2−1−90; am. (intro.), (1) (a) and (b) and (2), Register, June, 1991, No. 426, eff. 7−1−91.

NR 141.23 Well and borehole construction documentation. (1) All permanent groundwater monitoring well construction shall be reported to the department, using forms and instructions provided by the department, within 60 days after the well has been installed. The completed report shall include the following information:

(a) Well location,

(b) Well casing material and installation procedures,

(c) Well screen materials and installation procedures,

(d) Filter pack materials and installation procedures,

(e) Sealing materials and installation procedures,

(f) Drilling methods and fluids used for installation,

(g) Borehole diameter,

(h) Well development procedures,

(i) Sieve analysis, and

(j) Any other information deemed necessary by the department.

(2) All permanent groundwater monitoring wells installed after February 1, 1990 shall be labeled with labels supplied by the department.

(3) All borehole construction data shall be reported to the department using forms and instructions supplied by the department within 60 days after construction. The completed report shall include the following data: the results of any soil tests done and a description of the soil structure, soil color, mottling, moisture content, layering, jointing, lenses, fractures, organic matter and voids and any other information deemed necessary by the department. The constructor shall report any decontamination procedures used between borehole installations.

History: Cr. Register, January, 1990, No. 409, eff. 2−1−90; am. (1) (h), renum. (1) (i) to (j), cr. (1) (i), Register, June, 1991, No. 426, eff. 7−1−91.

NR 141.25 Abandonment requirements. The following requirements apply to the abandonment of all boreholes greater than 10 feet deep or which intersect a water table and all groundwater monitoring wells. The department may require, by order or other appropriate means, that any borehole or monitoring well be abandoned. The department shall consider the following factors in determining whether a borehole or monitoring well should be abandoned: purpose, location, groundwater quality, age and condition of the well or borehole potential for groundwater contamination and well or borehole construction.

(1) TIMELINES FOR ABANDONMENT. (a) A borehole shall be abandoned within 3 working days after its use has been discontinued.

(b) Any permanent groundwater monitoring well no longer being used to gather information on geologic or groundwater properties shall be abandoned within 60 days after its use has been discontinued.

(c) Any groundwater monitoring well found by the department to be acting as a conduit for groundwater contamination shall be abandoned within 15 working days after written notification by the department.

(d) Any groundwater monitoring well constructed after February 1, 1990 not meeting the requirements of this chapter shall be abandoned and replaced with a monitoring well meeting the requirements of this chapter or any department approval granted under this chapter within 60 days after installation of the noncomplying well or 15 days after written notification by the department that the well is noncomplying.

(2) ABANDONMENT PROCEDURES. (a) *Boreholes.* Any borehole intersecting the water table or greater than 10 feet deep, whose use has been discontinued, shall be abandoned according to the requirements of par. (d).

(b) *Monitoring wells — impermeable annular space seals.* A permanent groundwater monitoring well known to be constructed with an impermeable annular space seal shall be abandoned according to the requirements of par. (d) after the protective cover pipe and ground surface seal have been removed and the well casing cut off at least 30 inches below the ground surface. The well casing may be completely removed during abandonment by pulling the well casing, overdrilling around the casing and then pulling the well casing out of the ground or by drilling out the well casing completely. If the well casing is to be removed, the well shall be sealed as the casing is removed.

(c) *Monitoring wells — permeable annular space seals and wells in waste areas.* A groundwater monitoring well not known to be constructed with an impermeable annular space seal or located in an existing or planned future waste disposal or treatment area shall be abandoned by removing the protective cover pipe and the ground surface seal and then completely removing the well casing. The well casing shall be pulled out of the ground as the well is filled according to the requirements of par. (d).

(d) *Sealing requirements.* Boreholes and groundwater monitoring wells shall be abandoned by complete filling with neat cement grout, bentonite−cement grout, sand−cement grout, concrete or bentonite−sand slurry. When a tremie pipe is used to place the sealing material, the procedures of s. NR 141.10 (2) shall be followed. A tremie pipe shall be used to abandon groundwater wells and boreholes greater than 30 feet in depth or with standing water. Groundwater monitoring wells and boreholes greater than 100 feet in depth shall be sealed with a tremie pipe−pumped method. Bentonite may be used as a sealing material without the use of a tremie pipe under the following conditions:

1. Bentonite granules may be used for abandonment of boreholes and groundwater monitoring wells less than 25 feet deep and when there is no standing water above the filter pack seal.

2. Bentonite chips no greater than 3/8 inch in diameter or bentonite pellets may be used for abandonment of boreholes and groundwater monitoring wells less than 50 feet deep and the depth of standing water is less than 30 feet.

3. Bentonite chips no greater than 3/8 inch in diameter or bentonite pellets may be used for abandonment of boreholes and groundwater monitoring wells which are greater than 4 inches in diameter and less than 250 feet deep and the depth of standing water is less than 150 feet.

(3) SEALANT SETTLEMENT. Any settling of the sealant material shall be topped off. Sealing material may be terminated 30 inches below the ground surface in agricultural areas to avoid interference with agricultural activities. A native soil plug shall be placed on top of the settled sealing material in such cases.

(4) ABANDONMENT DOCUMENTATION. All borehole and permanent groundwater monitoring well abandonments shall be reported to the department within 60 days of the abandonment on forms supplied by the department. In addition to the information required on the form, the person performing the abandonment shall report any decontamination procedures used between borehole and well abandonments.

History: Cr. Register, January, 1990, No. 409, eff. 2−1−90; am. (2) (b), (2) (d) 1. to 3. and (3), Register, June, 1991, No. 426, eff. 7−1−91.

NR 141.27 Driven point wells. Driven point wells with galvanized steel drive pipes and contaminant compatible well screens may be used as permanent groundwater monitoring wells if prior department approval is obtained. Written documentation shall be supplied to the department prior to installation indicating:

(1) That the well is to be used only for water table elevation measurements or to monitor for parameters for which the well casing and screen material will not interfere with the analytical results;

(2) That the well will not provide a conduit for contaminants to enter the groundwater; and

(3) That information on subsurface stratigraphy is not needed. In situations where subsurface geologic information is needed, a separate borehole shall be constructed to collect the required data.

History: Cr. Register, January, 1990, No. 409, eff. 2−1−90.

NR 141.29 Temporary groundwater monitoring wells. Temporary groundwater monitoring wells may be installed according to less stringent standards than specified for permanent groundwater monitoring wells. Any temporary monitoring well construction shall be approved by the department prior to its installation. All temporary monitoring wells shall be abandoned in accordance with s. NR 141.25 within 120 days after their installation.

History: Cr. Register, January, 1990, No. 409, eff. 2−1−90.

NR 141.31 Special circumstances and exceptions. **(1)** The department may require or approve more restrictive or alternative well material, assembly, installation, development or abandonment if the contaminant concentrations or geologic setting require alternative construction. Prior written approval is required before any alternative materials are used in monitoring well installation.

(2) Exceptions to the requirements of this chapter may be approved by the department prior to installation or abandonment. An exception request shall state the reasons why compliance with the rule requirements is infeasible. The department may conditionally approve an exception by requiring materials or procedures which safeguard against contamination and result in groundwater monitoring well construction which is substantially equivalent to the requirements of this chapter. Failure to comply with the conditions of an exception voids the department's approval of the exception.

History: Cr. Register, January, 1990, No. 409, eff. 2−1−90.