# Chapter NR 812

## APPENDIX

**Figure 1. Pitless unit connections for wells with steel well casing pipe.**

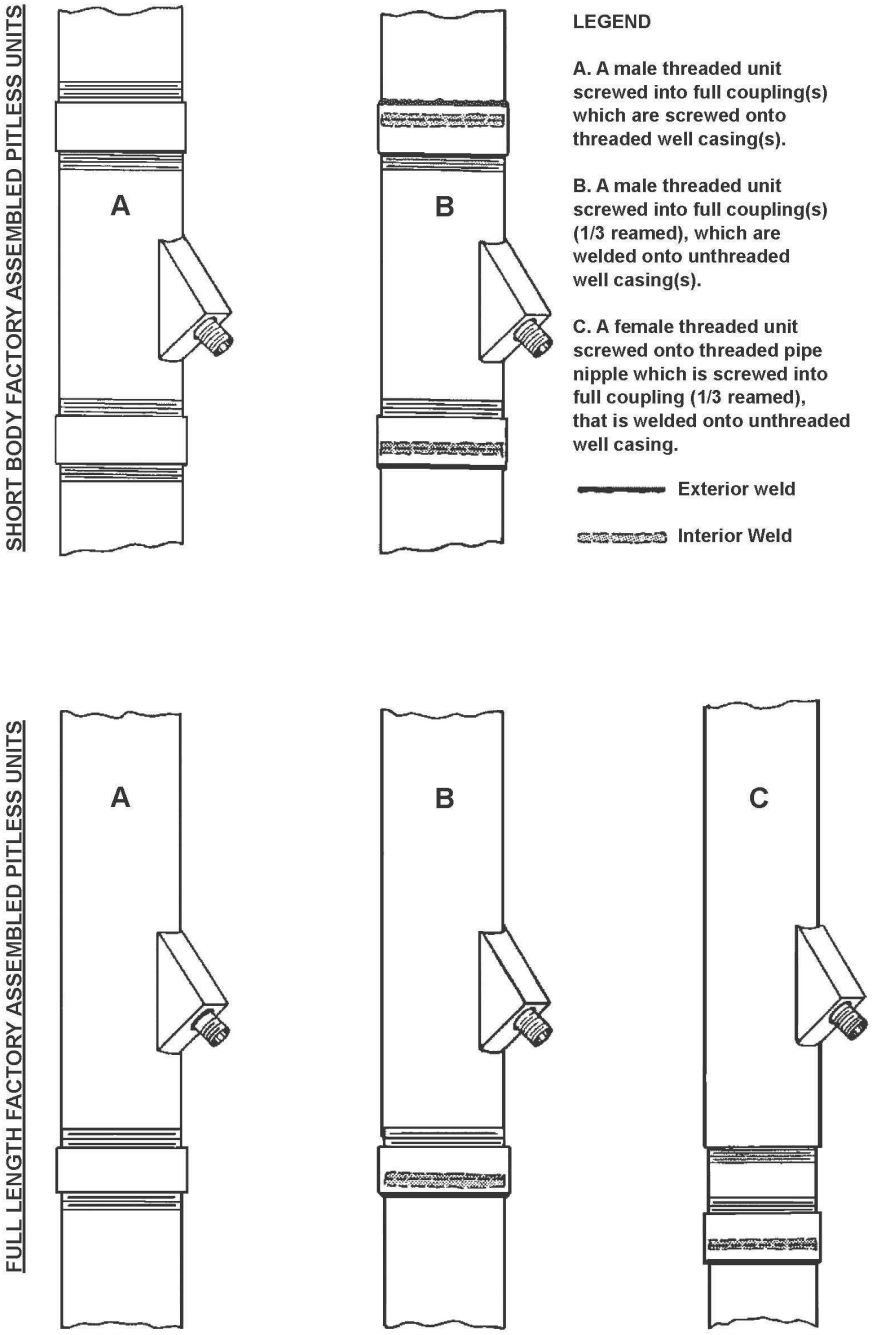

## Figure 2. Pitless unit connections for wells with thermoplastic well casing pipe.

SHORT BODY FACTORY ASSEMBLED PITLESS UNITS

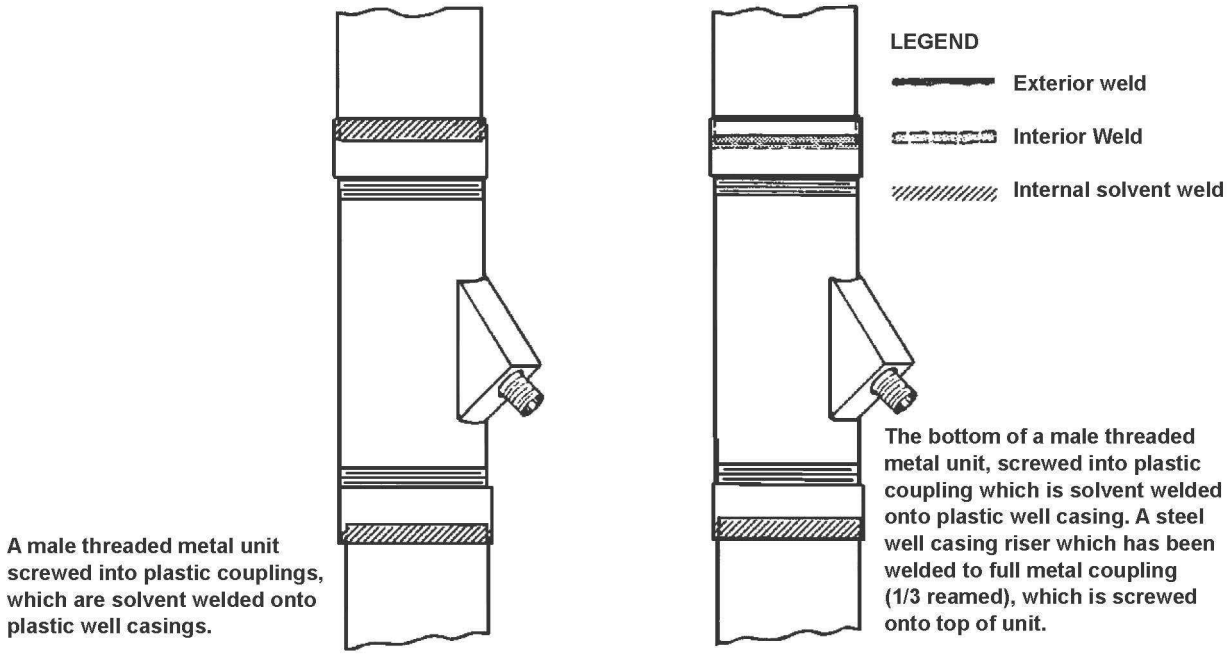


FULL LENGTH FACTORY ASSEMBLED PITLESS UNITS

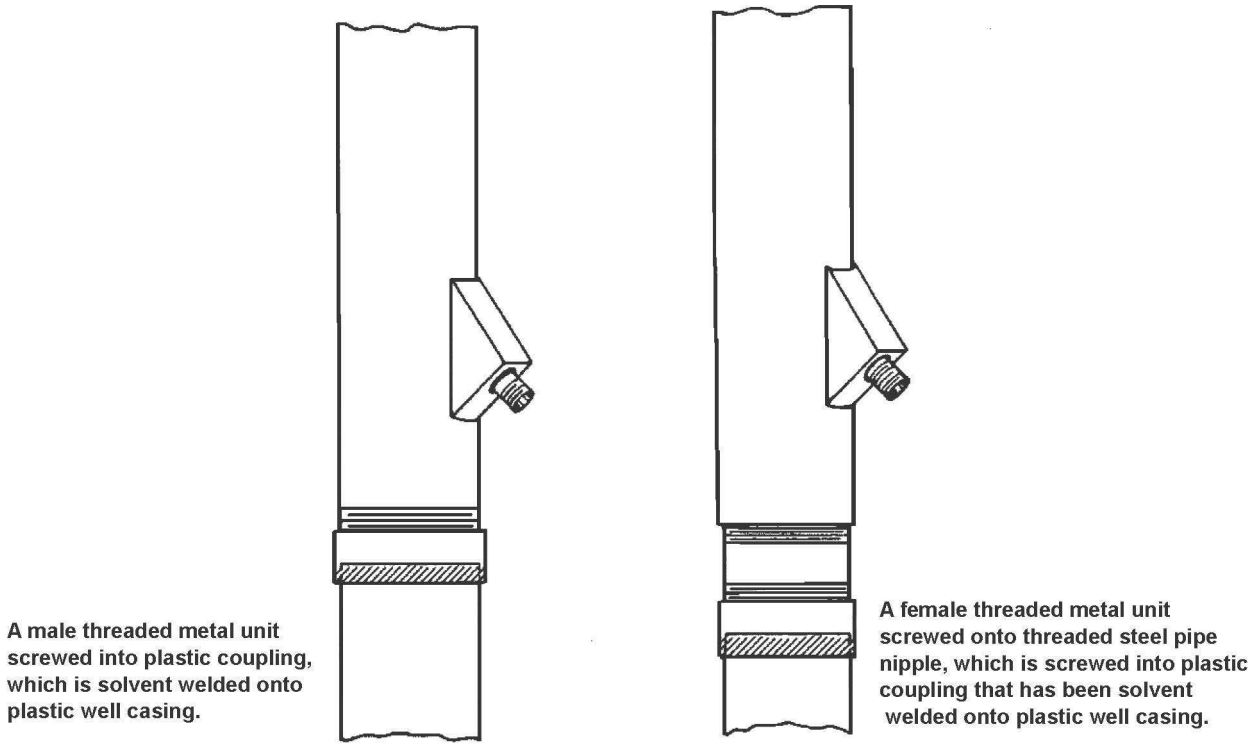

**Figure 3. High capacity well pump installation depicting pumpage and water level measuring devices, well vents and air-relief vacuum breakers.**

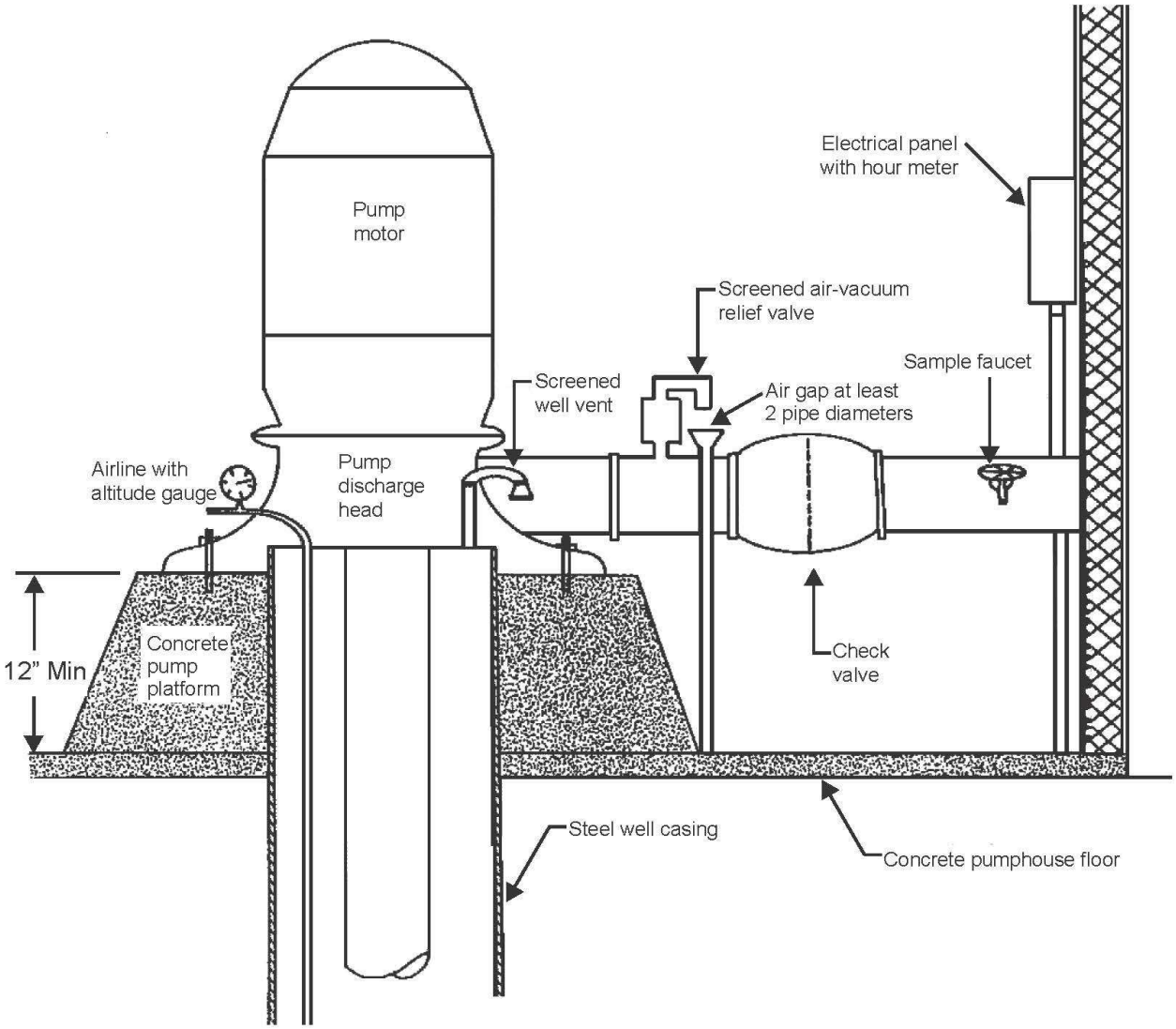

## Figure 4. Hand pump

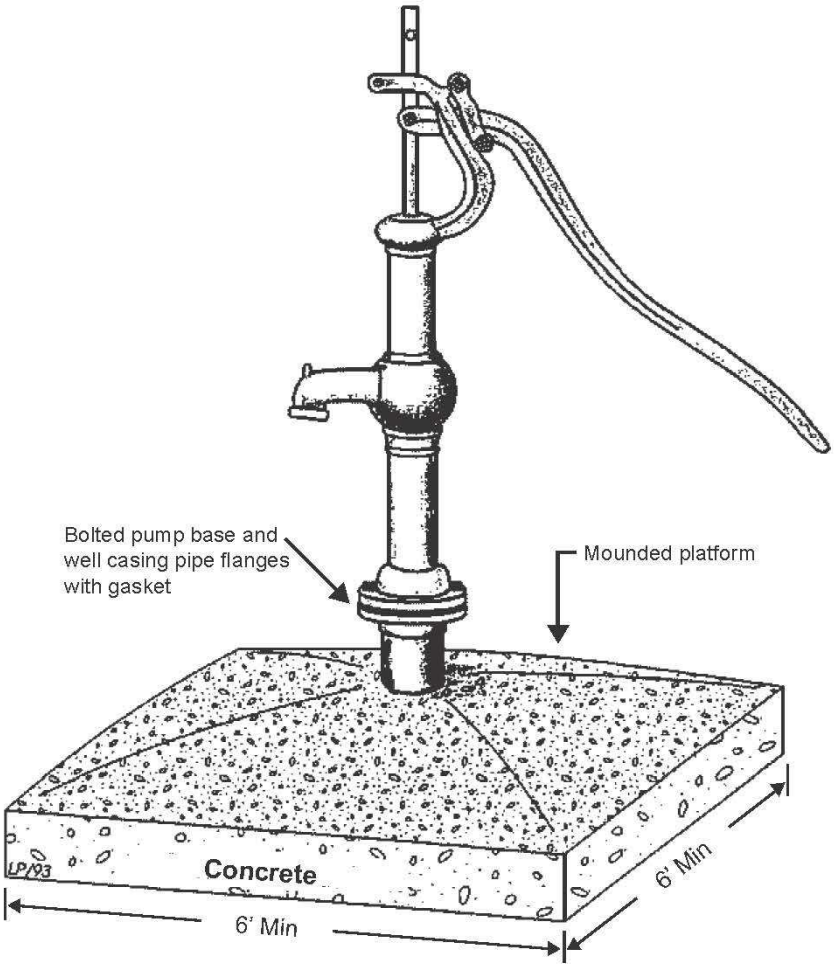

**Figure 5. Flowing well - Overflow piping arrangement with a submersible pump.**

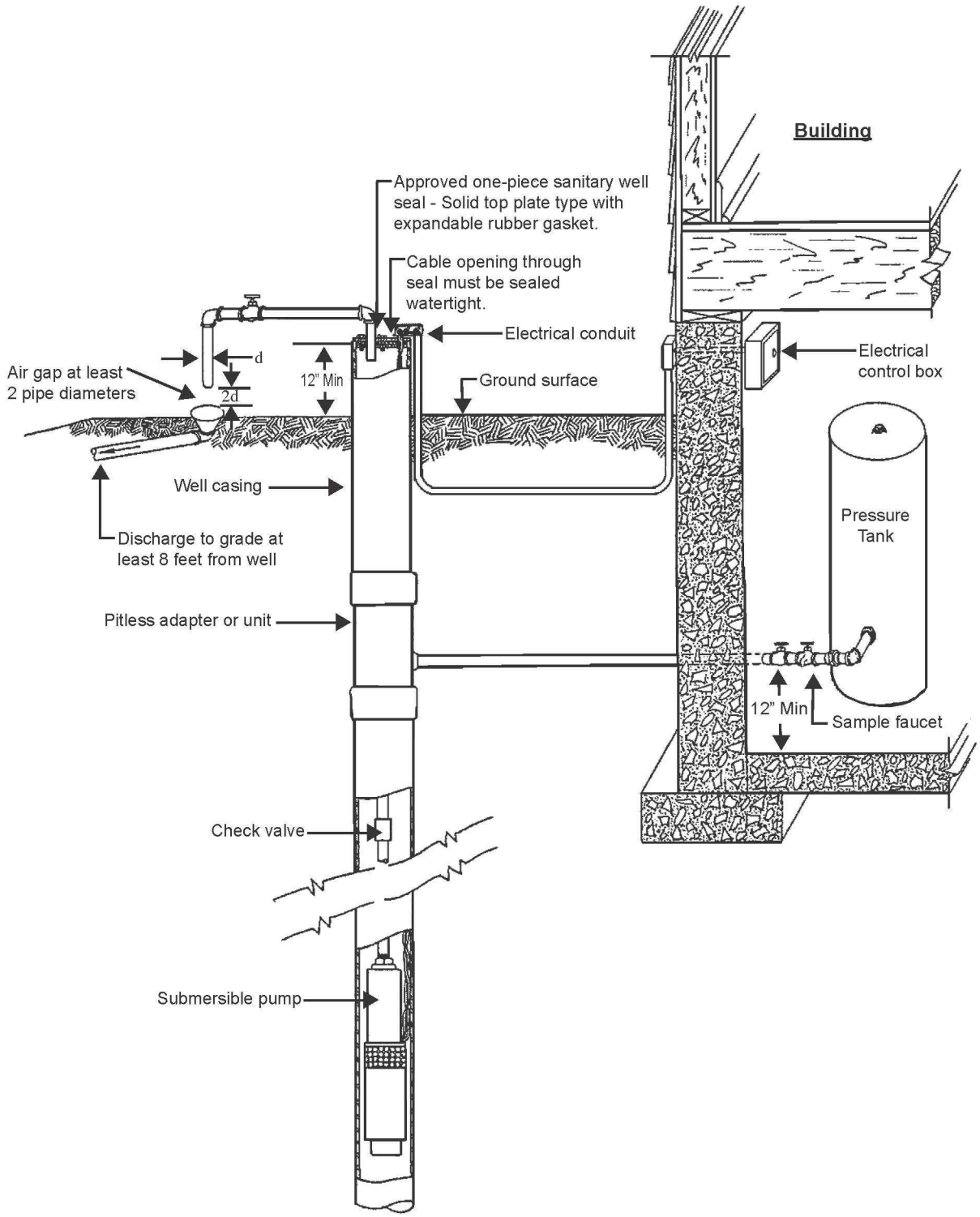

**Figure 6. Flowing well - surge tank installation.**

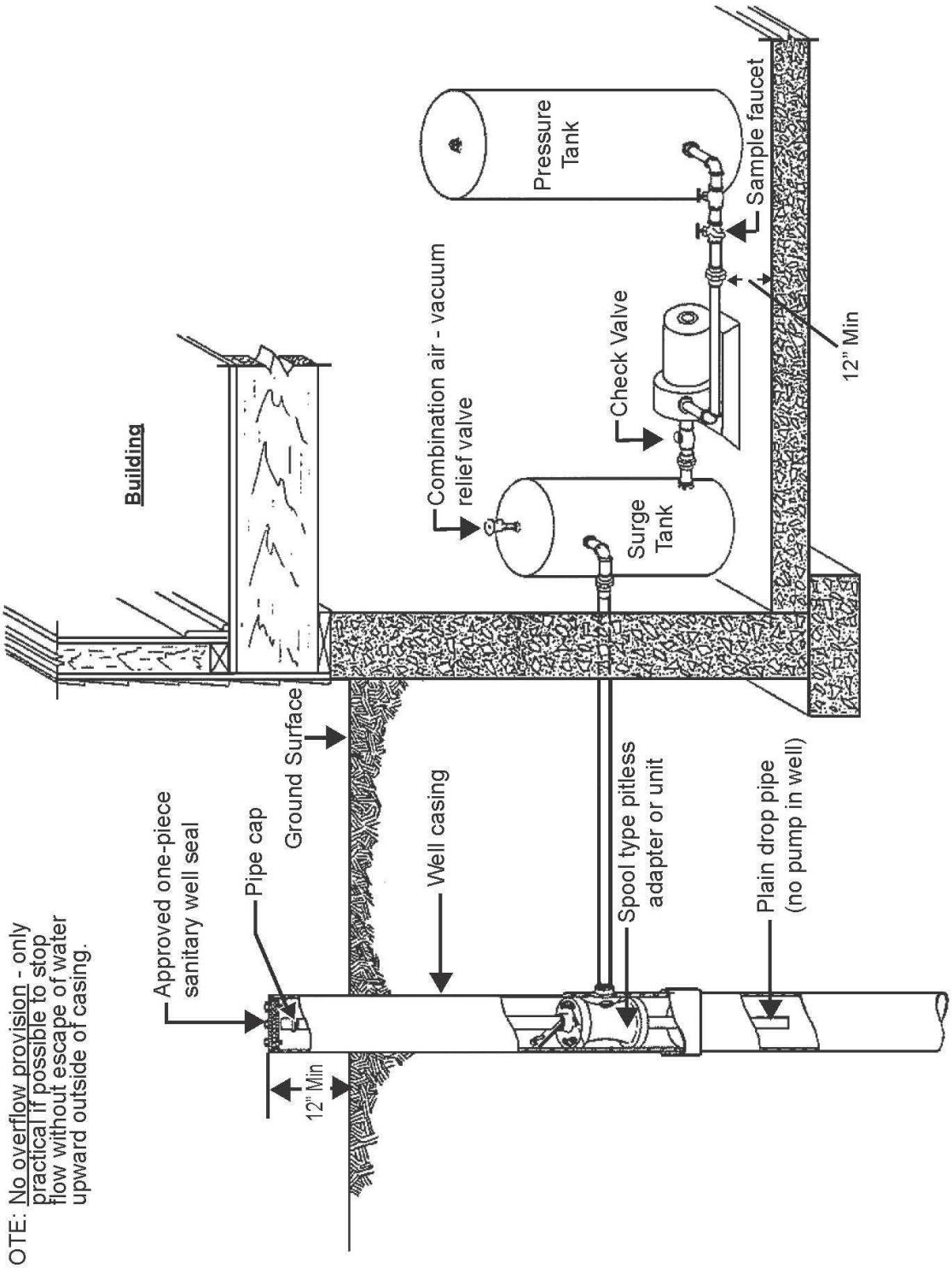


NOTE: No overflow provision - only practical if possible to stop flow without escape of water upward outside of casing.

**Figure 7. Flowing well - Overflow piping arrangement with a surge tank and no pump.**

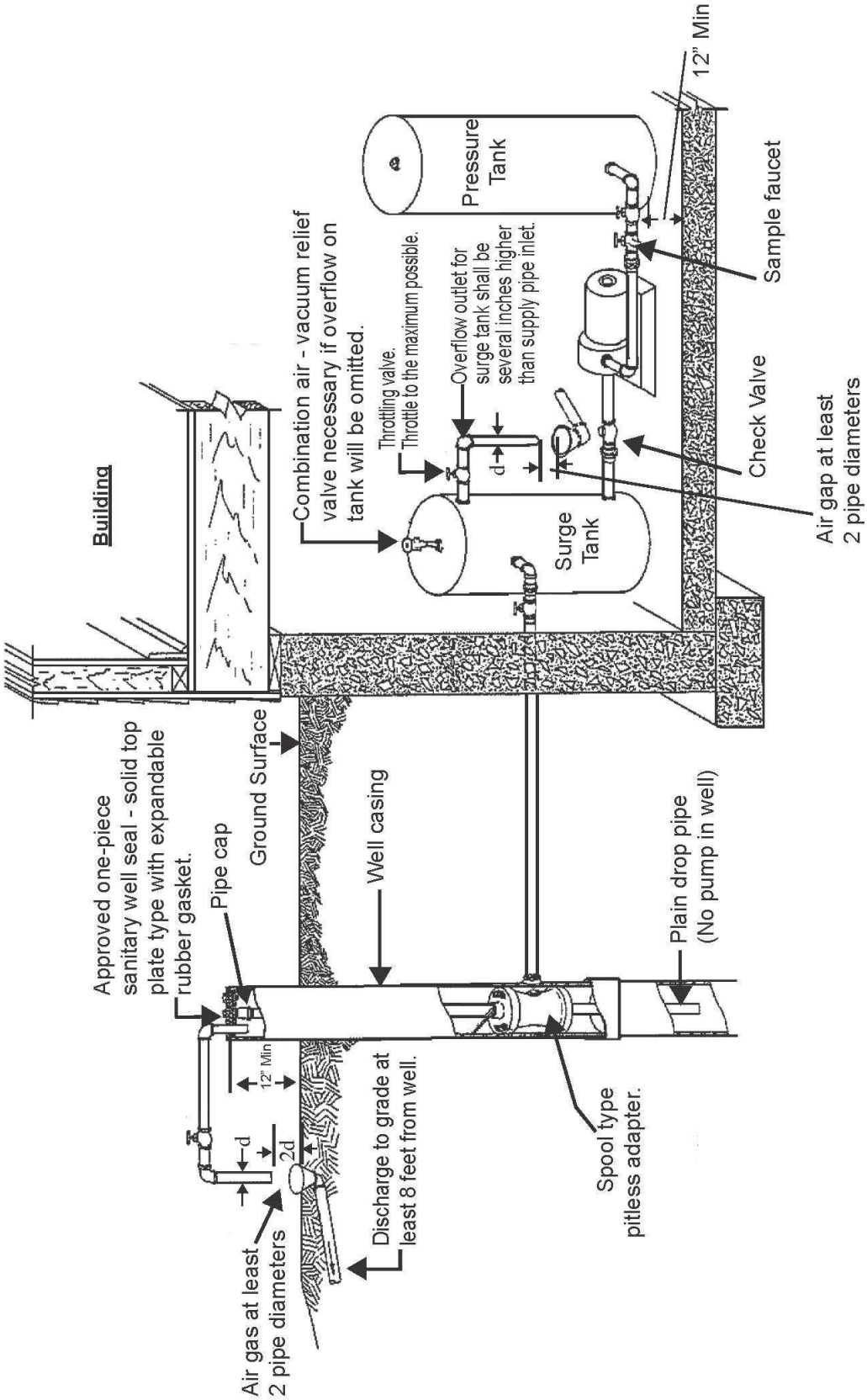

**Figure 8. Reservoir specifications.**

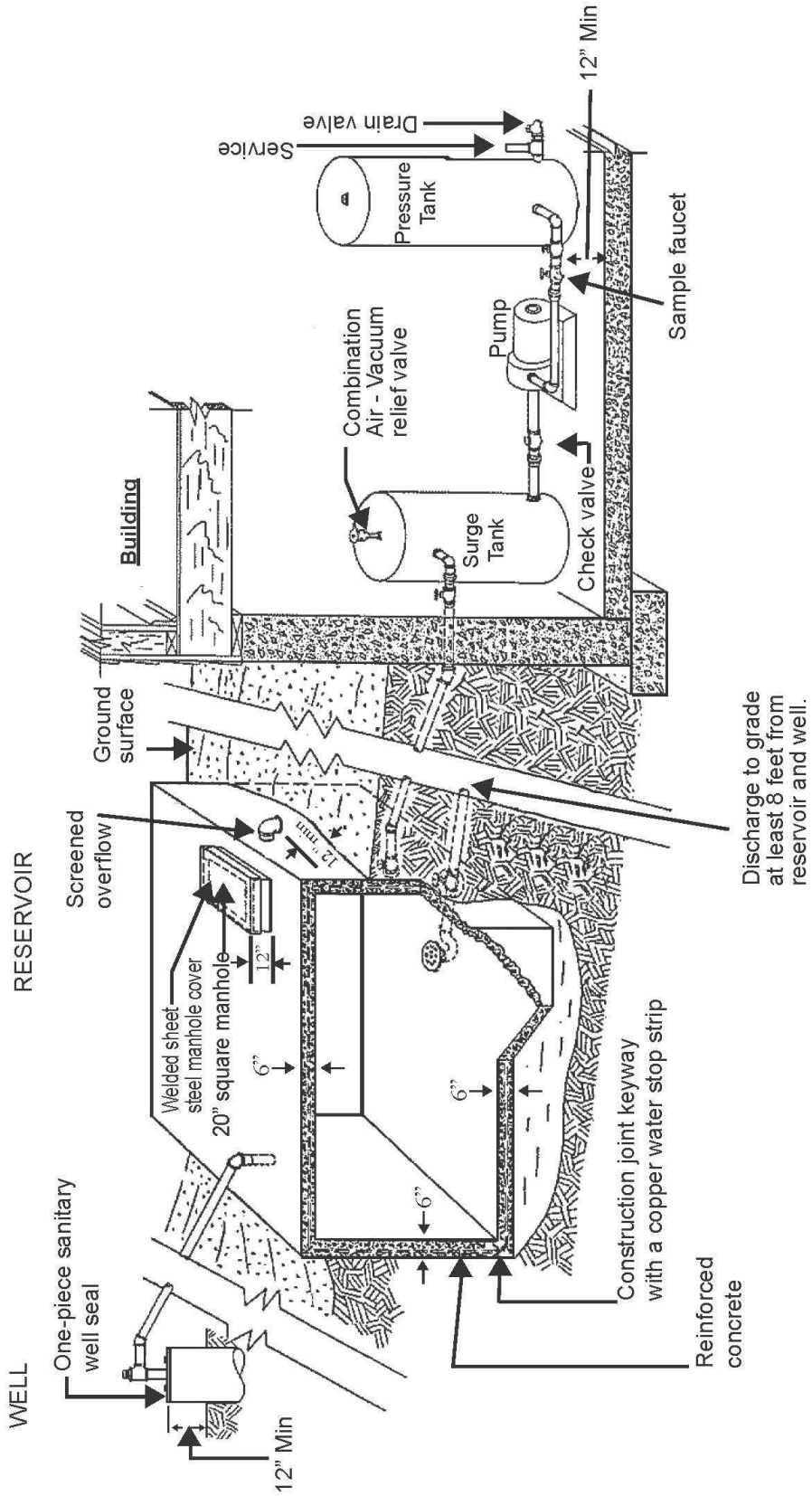

Published under s. 35.93, Wis. Stats., by the Legislative Reference Bureau.



**Figure 9. Well pits - Minimum requirements**

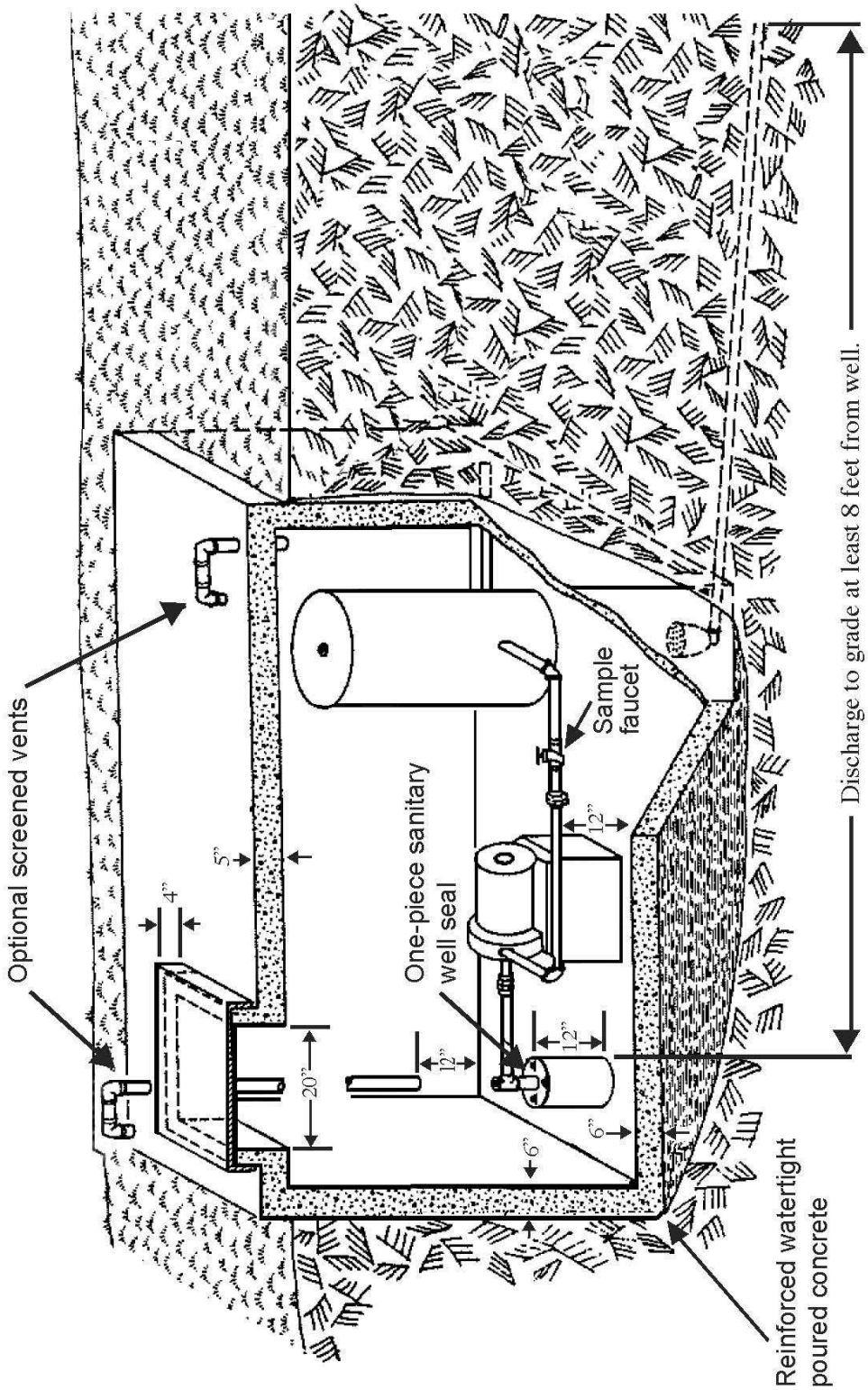


*Published under s. 35.93, Stats. Updated on the first day of each month. Entire code is always current. The Register date on each page is the date the chapter was last published.*

**Figure 10. Driveway Ramp Installation**

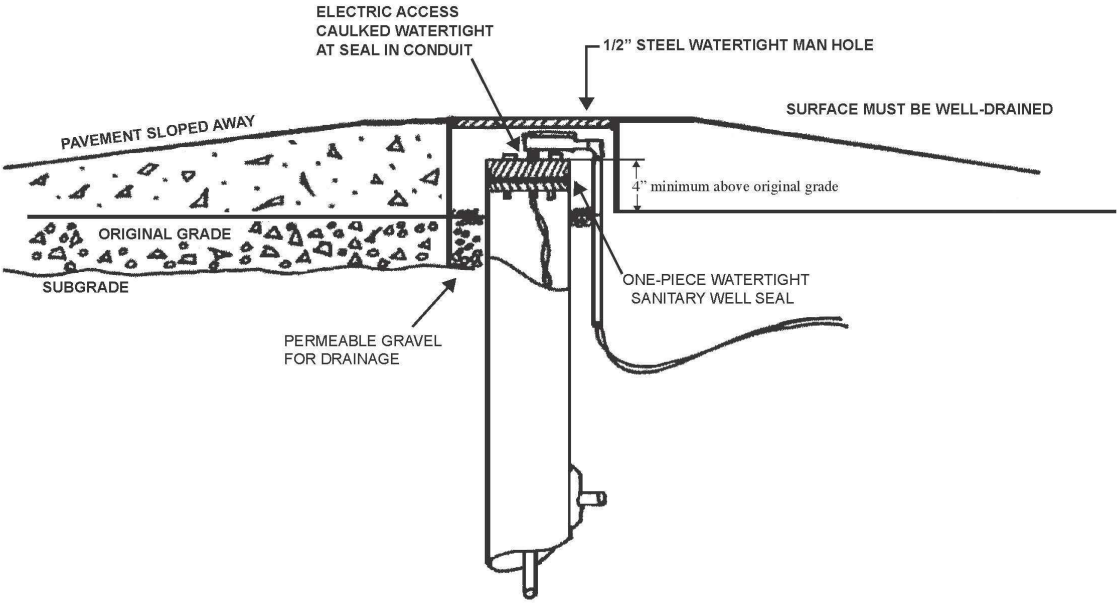

Published under s. 35.93, Wis. Stats., by the Legislative Reference Bureau.



**Figure 11. Well pits - Minimum requirements for pits installed on or before April 10, 1953.**

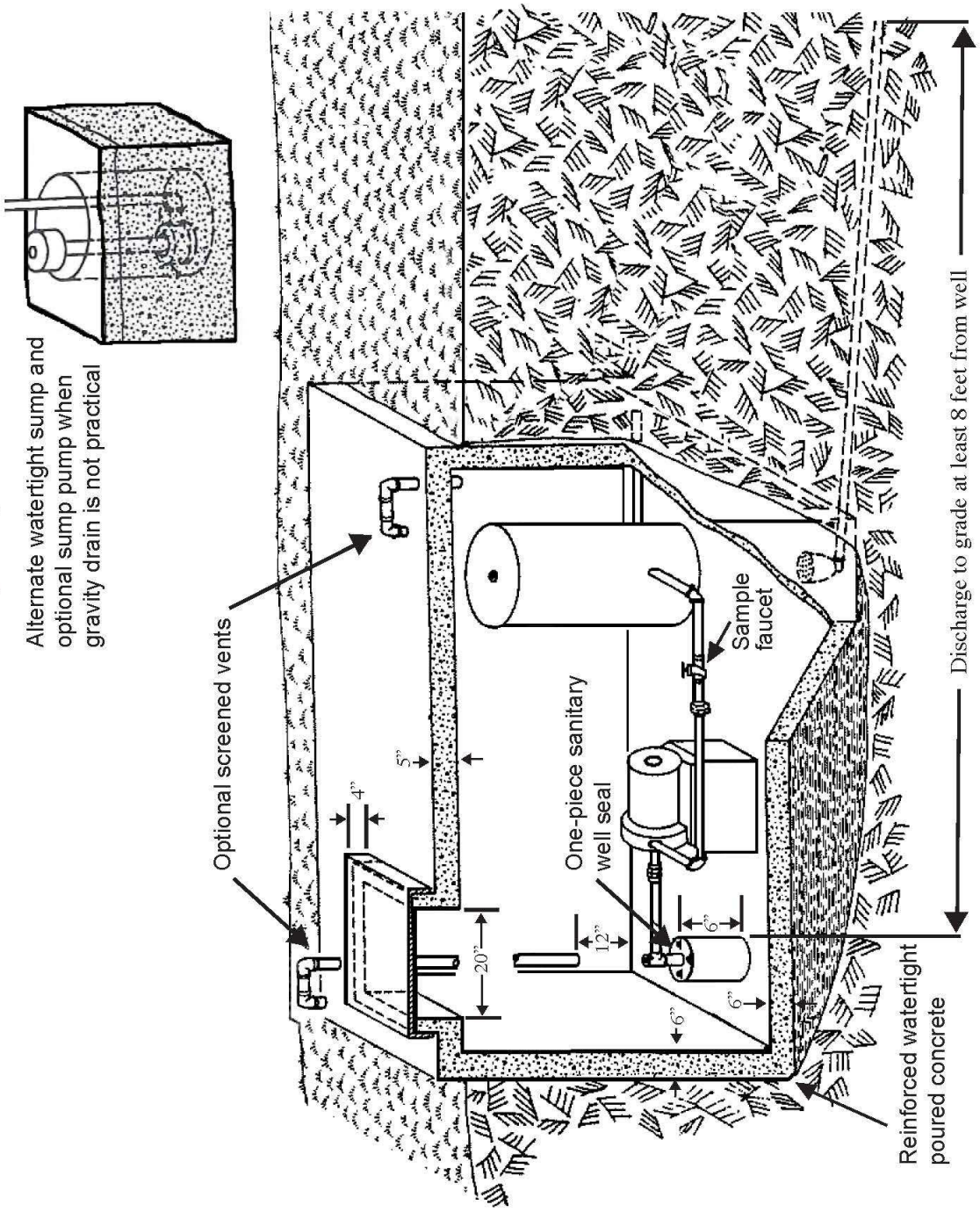

**Figure 12. Alcove - Requirements for an alcove installed on or before April 10, 1953**

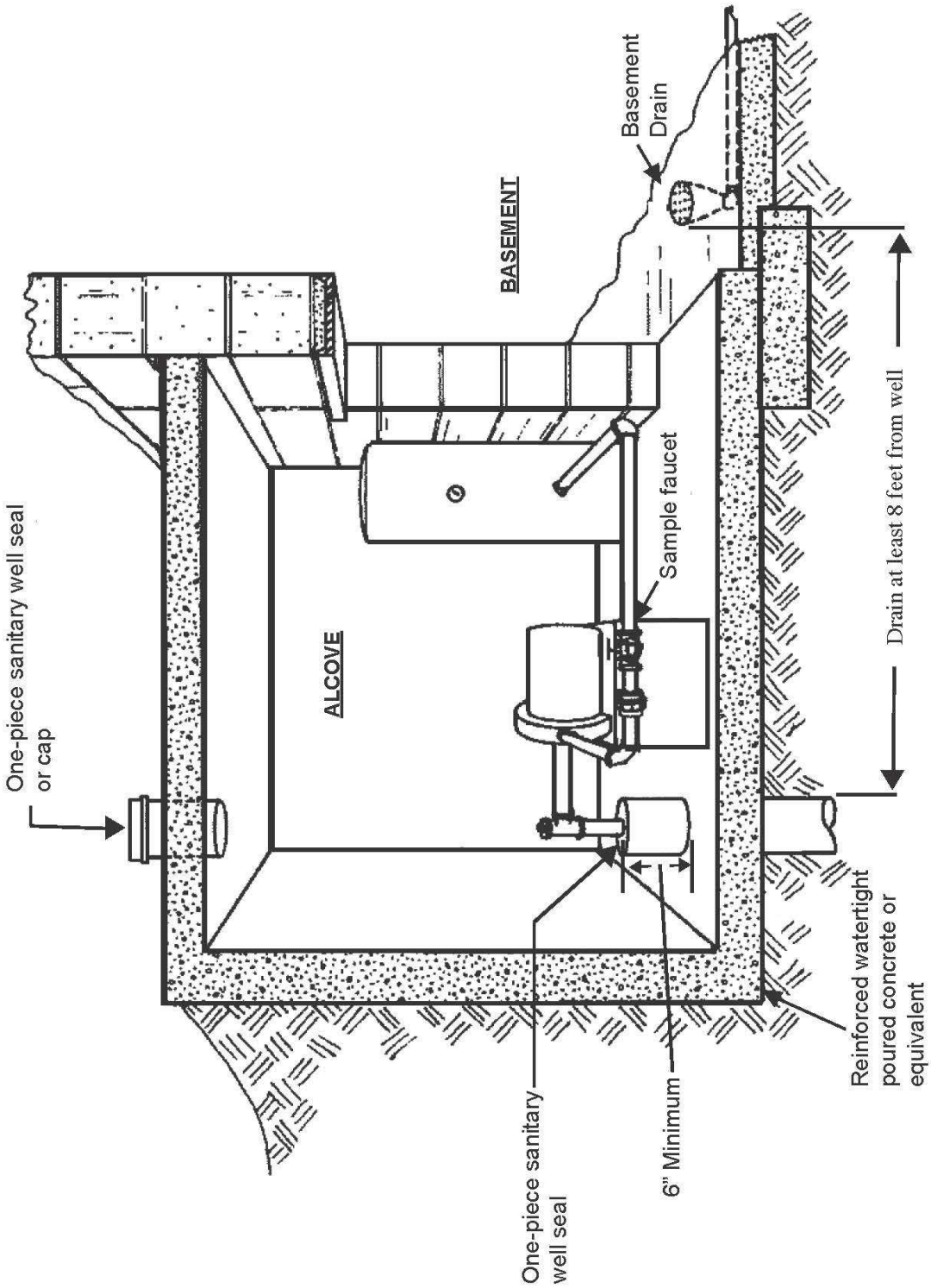

**Figure 13. Minimum requirements for pump installations for wells with nonpressurized conduit installed prior to Febuary 1, 1991**

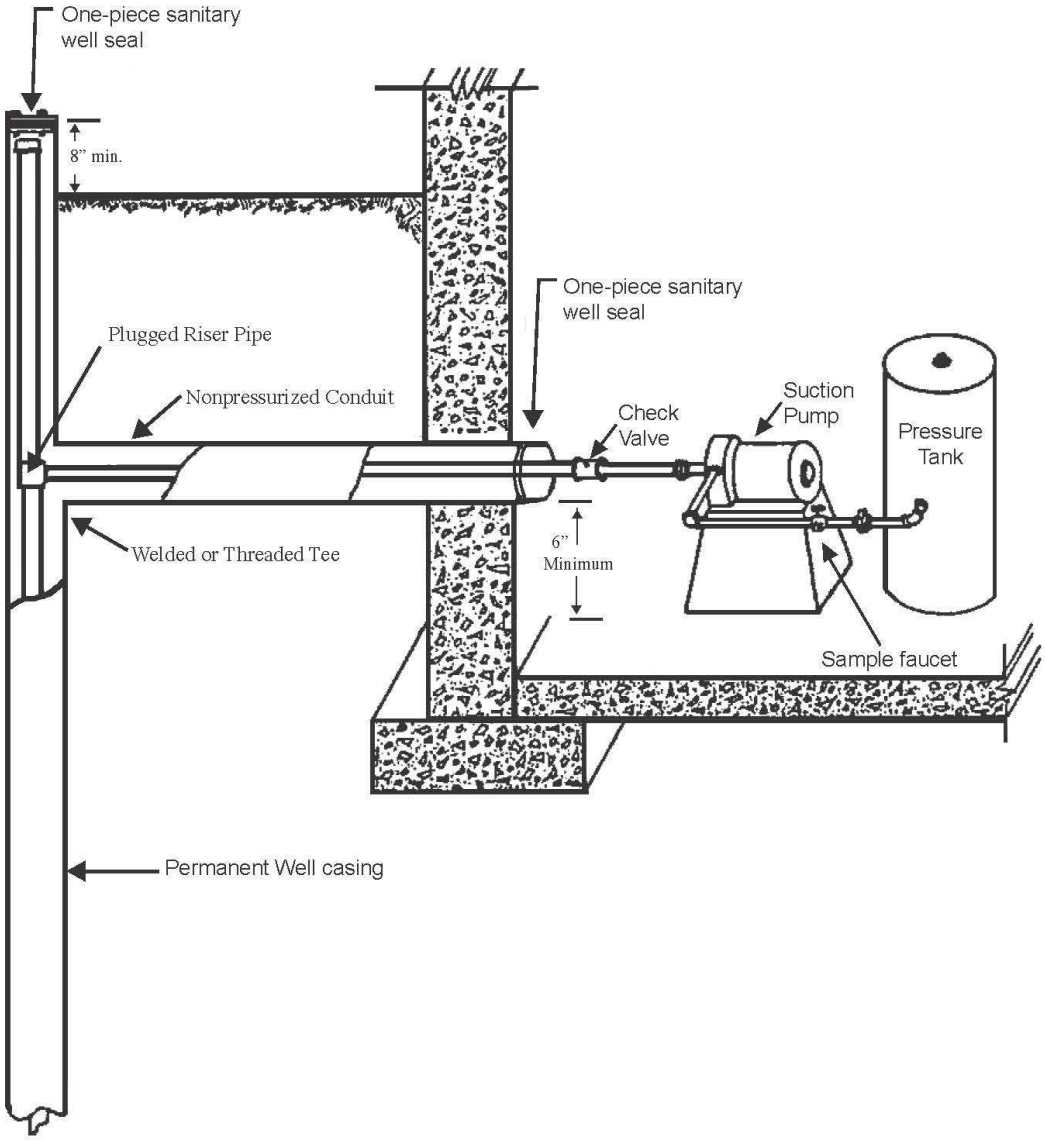
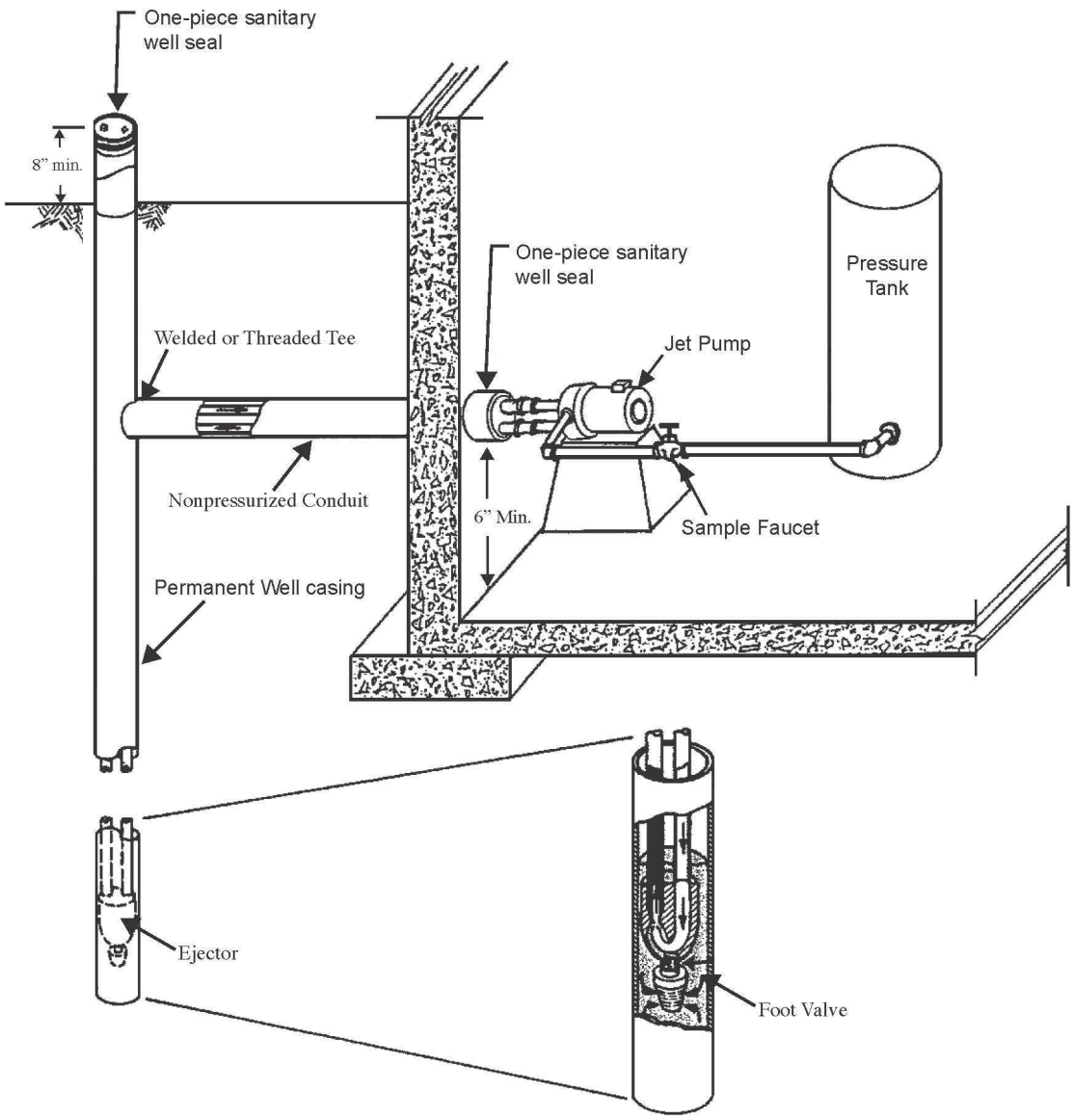
**Figure 14. Pump installation for a deep well jet pump assembly and a nonpressurized conduit installed prior to Febuary 1, 1991**