**Clearinghouse Rule 06-120**

**ORDER OF THE**
**DEPARTMENT OF COMMERCE**

**CREATING RULES**

The Wisconsin Department of Commerce proposes an order to repeal ch. Comm 9, Comm 10.30, Comm 61.38, Comm 61.60 (2) (a) 2. to 4., Comm 62.0001, Comm 62.0302, Comm 62.0303 (1), Comm 62.0305, Comm 62.0310 (1), Comm 62.0400 (2) (b) and (c), Comm 62.0403, Comm 62.0404, Comm 62.0406 (2), Comm 62.0509, Comm 62.0603 (1), Comm 62.0706, Comm 62.0711, Comm 62.0712, Comm 62.0715, Comm 62.0719, Comm 62.0720, Comm 62.0903 (1m), Comm 62.0903 (12), Comm 62.0910 (3) to (6), Comm 62.1003 to 62.1009, Comm 62.1100 to 62.1110, Comm 62.1403, Comm 62.1407 (3), Comm 62.1607 (4) and (5), Comm 62.1608 (1) and (2), Comm 62.1609 and 62.1610, Comm 62.1614 to 62.1621, Comm 62.1910, Comm 62.2108, Comm 62.2208 and 62.2209, Comm 62.2306 and 62.2308, Comm 62.2406 to 62.2408, Comm 62.2902 (3), (4) and (8), Comm 62.3001 (4), Comm 62.3002, Comm 62.3100 (1), 62.3104 (1) (title) and (2), Comm 62.3406 and 62.3408, Comm 62.3500 (2) and (3) (a), Comm 64.0002 to 64.0004, Comm 64.0102 (1) and 64.0103, Comm 64.0202 (1) (d), Comm 64.0202 (2) (b), Comm 64.0301 (4) and (5), Comm 64.0401 (3), Comm 64.0401 (4) (a) 1. and 3., Comm 64.0401 (4) (b) 3. and 4., Comm 64.0403 (1), Comm 64.0506 (1), Comm 64.0506 (2) (c), Comm 64.0603 (1), Comm 64.0604 (2), Comm 64.0605 (4), Comm 64.0607, Comm 64.0702 (2), Comm 64.1001 (4), Comm 64.1201, Comm 64.1300, Comm 64.1500 (1), Comm 65.0002 to 65.0004, Comm 65.0300, Comm 65.0304 to 65.0306, Comm 65.0503, Comm 65.0617, and ch. Comm 70;

to renumber Comm 61.04 (4) and (5), Comm 61.60 (2) (a) 5. to 7., Comm 62.0202 (1) (d), (i) and (j), Comm 62.0303 (2), Comm 62.0310 (2), Comm 62.0400 (2) (a), Comm 62.0406 (1), Comm 62.0903 (11), Comm 62.0903 (13), Comm 62.0907 (3), Comm 62.0909 (5) and (6), Comm 62.1603 (1) to (4), Comm 62.2101 (1) and (2), Comm 62.2902 (5), Comm 62.3100 (2), Comm 62.3104 (1), Comm 62.3500 (3) (b) to (e), and Comm 64.0401 (4) (a) 2. and 4.;

to renumber and amend Comm 61.04 (6), Comm 62.0202 (1) (c), Comm 62.0202 (1) (e) to (h), Comm 62.0603 (2), Comm 62.0907 (4), Comm 62.1203, Comm 62.1205, Comm 62.1209, Comm 62.1407 (4), Comm 62.1608 (3) and (4), Comm 62.1807 to 62.1809, Comm 62.1914, Comm 62.1916, Comm 62.2902 (6), (7) and (9), Comm 64.0202 (2) (a), Comm 64.0401 (4) (b) 5., Comm 64.0603 (2), Comm 65.0609, Comm 65.0620, Comm 65.0629, and Comm 65.0630;

to amend Comm 2.31 (1) (a), Comm 2.52 (3) (title) and (a), Comm 2.52 (4), Comm 2.52 (8) (b), Comm 3.03 (5) (d), Comm 5.34 (1), Comm 5.61 (1), Comm 16.08 (1) Note, Comm 16.17 (1) (b) and (2) (a) Note, Comm 16.45 (3) Note, Comm 16.48 (2) Note, Comm 18.1004 (5) and Note, Comm 61.05 (1) to (4), Comm 61.30 Table 61.30-1, Comm 61.30 Table 61.30-2, Comm 61.36 (2), Comm 62.0100, Comm 62.0400 (1), Comm 62.0903 (8) to (10), Comm 62.910 (title),

Comm 62.0910 (1), Comm 62.1405 (2) (c) 3., Comm 62.1407 (title) and (2), Comm 62.1700, Comm 62.1802 (3), Comm 62.1903, Comm 62.2103 (intro.), Comm 62.2303 (2), Comm 62.2304, Comm 62.2701 Note, Comm 62.2900 (3) (c) (intro.), Comm 62.2901 Note, Comm 62.2902 (1) (c) 1., Comm 62.2902 (1) (d), Comm 62.3004 (2) (intro.), Comm 62.3102, Comm 62.3500 (1), Comm 62.3600 (1), Comm 64.0301 (3) (b), Comm 64.0304 Note, Comm 64.0306, Comm 64.0401 (4) (a) (intro.), Comm 64.0401 (4) (b) (intro.) and 1., Comm 64.0401 (5) (intro.), Comm 64.0403 (3), Comm 64.0501, Comm 64.0506 (2) (title) and (a), Comm 64.0702 (1), Comm 64.0801 (2), Comm 64.1500 (2) (a), Comm 65.0301 (1), and chs. Comm 75 to 79 (title);

to repeal and recreate ch. Comm 7, ch. Comm 14, Comm 61.03, Comm 61.05 (5), Comm 62.0415 (2), Comm 62.0903 (5), Comm 62.0903 (6), Comm 62.1505, Comm 62.1607 (1) and Table 1607.1, Comm 62.1805 (2), Comm 62.1901, Comm 62.2303 (1), Note following Comm 62.2308, Comm 62.2902 (1) (c) 3., Comm 62.3400, ch. Comm 63, Chapter Comm 64 Subchapter I (title), Comm 64.0001, Comm 64.0101, Comm 64.0309, Comm 64.0313 (3), Comm 64.0403 Table 64.0403, Comm 64.0506 (2) (b), Comm 64.0507, Comm 64.0900 (2), Chapter Comm 65 Subchapter I (title), Comm 65.0001, Comm 65.0101 Note, and Comm 65.0202;

and to create Comm 14 Appendix, Comm 61.04 (7), Comm 61.30 (2) (d), Comm 61.41 (1) Note, Comm 62.0202 (1) (c), Comm 62.0307, Comm 62.0400 (5), Comm 62.0716, Comm 62.0903 (11), Comm 62.0903 (13), Comm 62.0907 (3), (4) and (7), Comm 62.0909 (5), Comm 62.1004, Comm 62.1008, Comm 62.1009, Comm 62.1015, Comm 62.1017, Comm 62.1019, Comm 62.1101, Comm 62.1103, Comm 62.1104, Comm 62.1107, Comm 62.1110, Comm 62.1603 (1) and (3), Comm 62.1613, Comm 62.1803, Comm 62.1807, Comm 62.1908, Comm 62.2101 (1), Comm 62.2204, Comm 62.2303 (3), Comm 64.0401 (6), Comm 64.0506 (2) (bm), Comm 64.0514, Comm 64.0601, Comm 64.0801 (3), Comm 65.0632, and ch. Comm 66 relating to construction, use and maintenance of public buildings and places of employment and affecting small businesses.

* * * *

## 3. Related Statute or Rule

Chapters Comm 2, Comm 5, Comm 10, Comm 16, Comm 40, Comm 41, and Comm 45

## 4. Explanation of Agency Authority

Under the statutes cited, the Department of Commerce protects public health, safety, and welfare by promulgating comprehensive requirements for design, construction, use and maintenance of public buildings and places of employment, and for fire departments. The Department also updates these requirements as necessary to be consistent with nationally recognized standards that are incorporated by reference into the Wisconsin Commercial Building Code (WCBC) and the Wisconsin Fire Prevention Code, specifically, the building code requirements developed by the *International Code Council*® (ICC) and the fire prevention requirements developed by the National Fire Protection Association (NFPA).

## 5. Summary of Proposed Rules

### 5A. Summary of Chapters Comm 7, 9 and 14 Relating to Fire Prevention and Comm 60 to 66 Relating to the Commercial Building Code

Currently, the Department adopts by reference the 2000 editions of the ICC suite of building codes - the *International Building Code*® (IBC), the *International Energy Conservation Code*®, (IECC), the *International Mechanical Code*® (IMC) and the *International Fuel Gas Code*® (IFGC) - and makes Wisconsin modifications to these codes within the WCBC. The Department also adopts by reference the 2000 edition of the NFPA fire prevention code, NFPA 1. The department proposes to adopt the 2006 editions of these ICC and NFPA codes.

Many of the current Wisconsin modifications under the WCBC are proposed to be repealed as a result of changes occurring in the 2006 editions of ICC codes. The proposed update of the WCBC would apply to design and construction of new buildings and modifications to existing buildings.

The following summaries identify the substantive changes based on the topic area reviewed by the Department's various advisory councils.

### 5B. General Requirements Under the IBC

The IBC general requirements that require elevators to accommodate an ambulance-type stretcher in buildings 4 or more stories in height have been revised to increase the minimal length from 76 inches to 84 inches. This dimensional increase will require the use of a 4,000 pound elevator to satisfy the requirement. Currently, a 2500 pound elevator is acceptable to accommodate the 76-inch ambulance-type stretcher. The current Wisconsin modification to require ambulance-type stretchers in all health care facilities and outpatient clinics regardless of the height of the building will be eliminated, and the

IBC requirement to provide the larger elevators only in those buildings 4 stories or more in height will be maintained without modification.

**5C. Fire Protection Systems**

The prominent change with incorporating the latest edition of the IBC relating to fire protection systems is the requirement for automatic fire sprinkler system protection throughout all buildings with a Group R (Residential Occupancies) fire area, regardless of the number of dwelling units or the size of the building. Similar to the IBC, a proposed Wisconsin provision would not require providing sprinklers throughout all townhouses of 3 stories or less. For these types of townhouses, the Wisconsin proposed modifications reflect the statutory options and thresholds under s. 101.14 (4m), Stats., requiring either two-hour fire resistance construction or sprinkler protection when the building contains more than 20 dwelling units or the accumulative floor areas of the dwelling units exceed 16,000 square feet.

Rules are proposed to clarify the necessity of providing automatic fire sprinkler protection for buildings greater than 60 feet in height as required by the statutes. A proposed Wisconsin modification will address the protection of exterior balconies and ground-floor patios serving dwelling units in buildings of Type V construction and protected by a 13R sprinkler system

**5D. Fire Safety**

Some of the current Wisconsin modifications to the IBC relating to fire safety, under sections Comm 62.0706 to 62.0715, are being eliminated because they are covered under the latest edition of the IBC. No new Wisconsin modifications are being added in this topic area.

**5E. Means of Egress and Accessibility**

The major change starting with the 2003 edition of the IBC relating to means of egress (IBC chapter 10) was the reorganization and renumbering of the requirements to be more user-friendly.

Many of the current Wisconsin modifications to the IBC relating to means of egress are being eliminated because they are covered under the more recent editions of the IBC. Since most of the section numbers changed with the renumbering of the IBC, the current Wisconsin modifications that will be maintained have been repealed and recreated using the new IBC numbering system. No new Wisconsin modifications are being added. [See sections Comm 62.1004 to Comm 62.1018.]

The major change starting with the 2003 edition of the IBC relating to accessibility was the inclusion of fair housing design requirements, for consistency with the federal fair housing law. The Wisconsin modifications to the accessibility requirements are repealed and recreated, since the reprinting of the entire chapter to include the federal fair housing requirements is no longer necessary. Many of the retained Wisconsin modifications are those based on Wisconsin fair housing laws and other requirements relating to clear floor space and maneuverability within bathrooms in dwelling units and sleeping units. No new Wisconsin modifications are being added. [See Comm 62.1101 to Comm 62.1110.]

**5F. Structural**

Some of the current Wisconsin modifications to the IBC relating to structural requirements are being eliminated because they are addressed under the more recent editions of the IBC; or they are no longer needed, for other reasons. One current modification that is to be eliminated will result in the adoption of requirements in IBC sections 1711 to 1714 for structural tests. These tests do not duplicate the supervising-professional process under s. Comm 61.40, and provide information and assurance when utilizing unusual construction practices or components.

**5G. Energy**

Many of the current Wisconsin modifications to the IECC are being eliminated, because the 2006 edition of the IECC and the 2004 edition of the ASHRAE 90.1 standard reflect these requirements. The 2006 edition of the IECC has been significantly revised in comparison to the 2000 edition. Proposed by the U.S. Department of Energy, the energy conservation requirements for residential buildings have been simplified in order to achieve greater compliance and enforcement. The IECC energy conservation requirements regarding commercial buildings reflect the 2004 edition of the ASHRAE 90.1 Standard, *Energy Standard for Buildings Except Low-Rise Residential Buildings*. In light of these IECC revisions, the Department is proposing to eliminate many of the Wisconsin modifications currently under chapter Comm 63, subchapter III. The 2006 IECC provisions and proposed Wisconsin modifications include:

- Prescriptive envelope requirements for low-rise residential buildings with no limit on the amount of glazed openings.
- A new residential energy performance section.
- For commercial buildings, the required use of energy recovery ventilation systems in certain situations where individual fan systems have a design supply air capacity of 5,000 cfm or greater.
- For commercial buildings, the triggers for using economizers is equal to or greater than 33,000 Btu/h for simple cooling systems and equal to or greater than 54,000 Btu/h for complex cooling systems.

**5H. HVAC**

The 2006 editions of the IMC and the IFGC are proposed to serve as the basis for the Commercial Building Code's requirements under chapters Comm 64 and 65 concerning heating, ventilation and air conditioning. A number of current Wisconsin modifications under these chapters are being eliminated in light of the 2003 and 2006 revisions for the IMC and IFGC. The proposed rules do not significantly alter the current Wisconsin modifications regarding ventilation. However, the proposed rules do provide some flexibility in allowing the use of engineered natural ventilation as an option. Other IMC revisions, IFGC revisions and proposed Wisconsin modifications include:

- Expanding the time period defining seasonal buildings from May 1 through October 15 with respect to not having to provide heat.
- Referencing the 2001 edition of the American Institute of Architects *Guidelines for Design and Construction of Hospital and Health Care Facilities* regarding heating and ventilation requirements.

- Providing the option to determine the minimum kitchen hood exhaust quantities through engineering analysis.
- Incorporating chapter 12 of the IMC regarding hydronic piping.
- Establishing provisions for gaseous hydrogen systems.

**5I. Alteration and Change of Occupancy**

The Department is proposing to incorporate the 2006 edition of the *International Existing Buildings Code*® (IEBC) as part of the WCBC. The IEBC provides clarity in identifying which code provisions apply for repairs, alterations, additions and changes in occupancies to existing buildings or portions thereof. The IEBC and the associated Wisconsin modifications will be incorporated as chapter Comm 66 under the Commercial Building Code. The IEBC also includes provisions concerning historic buildings. In light of this, the current administrative rules under chapter Comm 70, Historic Buildings, are proposed to be eliminated. The IEBC also provides an evaluation methodology as an option to determine compliance for repairs, alterations, additions and changes in occupancy.

**5J. Fire Prevention**

The major change from the 2000 edition of the NFPA fire prevention code, NFPA 1, to the 2006 edition was to enroll numerous requirements from other NFPA codes and standards that previously were included only through cross-references to those codes and standards. In addition, many of the current Wisconsin modifications to NFPA 1 are being eliminated because they are covered under the 2006 edition, or they are no longer needed, for other reasons. For example, much of the administration portion of NFPA 1 that was previously deleted by Comm 14 is now retained, and merged with Wisconsin-specific administrative elements which devolve from statutory directives to the Department and local fire chiefs.

## 6. Summary of, and Comparison with, Existing or Proposed Federal Regulations

### General Building Code

*Code of Federal Regulations*

An Internet-based search for "federal commercial building code" and "building code regulations" in the *Code of Federal Regulations* (CFR) did not identify any federal regulations pertaining to these topics.

*Federal Register*

An Internet-based search for "federal commercial building code" and "building code regulations" in the 2003, 2004 and 2005 issues of the *Federal Register* did not identify any proposed federal regulations pertaining to these topics.

### Energy Conservation Requirements

*Code of Federal Regulations*
The portion of the CFR relating to energy conservation for commercial buildings and facilities is found under 10 CFR 420–State Energy Program. The stated purpose of this regulation is to promote the conservation of energy, to reduce the rate of growth of energy demand, and to reduce dependence on imported oil–through the development and implementation of comprehensive state energy programs. This regulation initially required that each state's energy conservation rules for new buildings be no less stringent than the provisions of the 1989 edition of ASHRAE Standard 90.1, *Energy Standard for Buildings Except Low-Rise Residential Buildings.*

*Federal Register*
As indicated in the July 15, 2002, *Federal Register*, the Secretary of the Interior amended the federal energy conservation regulations in 2002 by mandating compliance with the 1999 edition of the ASHRAE 90.1 Standard. The 2006 edition of the IECC energy conservation requirements regarding commercial buildings reflect the 2004 edition of the ASHRAE 90.1 Standard which the proposed rules would adopt by reference.

**Accessibility Requirements**

*Code of Federal Regulations*
The portions of the CFR relating to accessibility in commercial buildings and facilities include the following:

1. 28 CFR 35–Nondiscrimination on the Basis of Disability in State and Local Government Services
2. 28 CFR 36–Nondiscrimination on the Basis of Disability by Public Accommodations and in Commercial Facilities
3. 24 CFR 1–Final Fair Housing Accessibility Guidelines

The purpose of 28 CFR 35 and 28 CFR 36 is to require public buildings and commercial facilities, including government-owned and -operated buildings and facilities, to be designed, constructed, and altered in compliance with the accessibility construction regulations specified under the federal Americans with Disabilities Act Accessibility Guidelines (ADAAG). The purpose of 24 CFR 1 is to provide technical guidance on the design and construction of dwelling units as required by the federal Fair Housing Amendments Act of 1988. In Wisconsin, the accessibility requirements for the design and construction of public buildings and places of employment, including government-owned and -operated facilities and dwelling units, are currently found under chapter Comm 62 and the 2000 edition of the IBC as adopted by reference under section Comm 61.05. The intent of the IBC and the amendments included under chapter Comm 62 is to ensure the Wisconsin construction requirements related to accessibility are substantially equivalent to these applicable federal laws and regulations.

*Federal Register*
Proposed federal regulations and amendments to established federal regulations for accessibility are found in the following *Federal Registers*:

1. *Federal Register* January 13, 1998, ADAAG; State and Local Government Facilities

2. *Federal Register* January 13, 1998, ADAAG; Building Elements Designed for Children's Use
3. *Federal Register* November 16, 1999, ADAAG revisions and updates
4. *Federal Register* July 23, 2004, Americans with Disabilities Act and Architectural Barriers Act Accessibility Guidelines

The ICC is actively monitoring the proposed changes to the federal standards affecting accessibility and will include these changes in future editions of the IBC and the corresponding ICC/ANSI A117.1–Accessible and Usable Buildings and Facilities Standard.

**Safety Standards for Glazing Materials**

*Code of Federal Regulations*
The portion of the CFR relating to safety glazing material in commercial buildings and facilities is found under 16 CFR 1201–Safety Standard for Architectural Glazing Materials. This standard prescribes the safety requirements for glazing materials used in architectural products, such as doors, sliding glass doors, bathtub doors and enclosures, and shower doors and enclosures. Currently, IBC section 2406 requires glazing material located in human impact locations to comply with 16 CFR 1201.

*Federal Register*
An Internet-based search of 16 CFR 1201 in the 2003, 2004 and the 2005 issues of the Federal Register did not identify any proposed changes to this standard.

**Fire Prevention Code**

*Code of Federal Regulations*
An Internet-based search for "fire prevention" in the CFR identified the following federal regulations that potentially address fire prevention at places of employment in Wisconsin:

1. 29 CFR 1910–Occupational Safety and Health Standards
2. 29 CFR 1926–Safety and Health Regulations for Construction
3. 30 CFR 56–Safety and Health Standards–Surface Metal and Nonmetal Mines
4. 30 CFR 57–Safety and Health Standards–Underground Metal and Nonmetal Mines
5. 33 CFR 127–Waterfront Facilities Handling Liquefied Natural Gas and Liquefied Hazardous Gas
6. 46 CFR 28–Requirements for Commercial Fishing Industry Vessels
7. 46 CFR 34–Firefighting Equipment (on tank ships)

No changes to Comm 14 are intended to supersede these federal requirements, so no comparison is made here to those requirements.

*Federal Register*
An Internet-based search for "fire prevention" in the 2005 and 2006 issues of the *Federal Register* identified the following proposed federal rulemaking and related actions that may address fire prevention at public buildings or places of employment in Wisconsin:

1. *Federal Register* March 29, 2005, 32 CFR 184–Contractors' Safety for Ammunition and Explosives
2. *Federal Register* November 16, 2005, 49 CFR 173 and 177–pertaining to construction, maintenance, availability and use of safe havens for storage of explosives and other high-hazard materials during transportation
3. *Federal Register* January 19, 2006, Federal Emergency Management Administration solicitation of comments on proposed revisions to the National Fire Incident Reporting System

**Explosives and Fireworks**

*Code of Federal Regulations*

An Internet-based search of the CFR found the following federal regulations relating to the activities to be regulated by the proposed rules:

1. 27 CFR 555 – Commerce in Explosives. This regulation contains extensive procedural and substantive requirements relating to (1) interstate or foreign commerce in explosive materials; (2) licensing of manufacturers and importers of, and dealers in, explosive materials; (3) issuance of permits; (4) conduct of business by licensees and operations by permittees; (5) storage of explosive materials; (6) records and reports required of licensees and permittees; (7) relief from disabilities under this part; (8) exemptions, unlawful acts, penalties, seizures, and forfeitures; and (9) marking of plastic explosives. These regulations relating to the storage of explosive materials, such as separation distances and magazine construction, are the same as in chapter Comm 7. These regulations cover fireworks to the extent that display and special fireworks are classified as explosive materials.
2. 30 CFR 56 – Safety and Health Standards – Surface Metal and Nonmetal Mines, This regulation contains requirements relating to the storage, site transportation, use, extraneous electricity and equipment/tools for explosive materials at surface mines.
3. 30 CFR 57 – Safety and Health Standards – Underground Metal and Nonmetal Mines, This regulation contains requirements relating to the storage, site transportation, use, extraneous electricity and equipment/tools for explosive materials at underground mines.

*Federal Register*

An Internet-based search of the 2004 and 2005 issues of the *Federal Register* found the following regulations relating to the activities to be regulated by the proposed rules:

1. *Federal Register*, May 27, 2005. The Department of Justice, Bureau of Alcohol, Tobacco, Firearms and Explosives published a final rule to require licensed importers to identify, by marking, all explosive materials they import for sale or distribution.

2. *Federal Register*, December 20, 2004. The Department of Justice, Bureau of Alcohol, Tobacco, Firearms and Explosives published a notice containing the 2004 annual List of Explosive Materials.

## 7. Comparison with Rules in Adjacent States

An Internet-based search of adjacent states' rules found the following regulations that include similar requirements relating to public buildings and places of employment:

- The Michigan Department of Labor and Economic Growth administers the Michigan construction codes, which adopt by reference the 2003 editions of the IBC, IRC, IECC, IEBC, and IMC, with amendments. That Department also administers a Michigan fire prevention code, which adopts by reference the 1997 editions of NFPA 1 and NFPA 101®, *Life Safety Code*®, with amendments. Michigan is in the process of adopting the 2006 editions of the ICC codes. The specific amendments cover differences from the adopted codes and include changes based on Michigan's laws; no amendments have been made relating to automatic fire suppression for residential occupancies.

- The Minnesota Department of Labor and Industry administers the Minnesota State Building Code, which adopts the 2000 editions of the IBC, IRC, IFGC, IMC, and IECC with amendments. The Minnesota Department of Public Safety administers the Minnesota State Fire Code, which adopts the 2000 edition of the *International Fire Code*® (IFC) with amendments. These Minnesota departments are in the process of adopting the 2006 editions of the ICC codes. The specific amendments cover differences from the adopted codes and include changes based on Minnesota's laws.

- Illinois does not administer a statewide building code. However, the Illinois Office of the State Fire Marshall administers the Illinois Fire Prevention and Safety Rules, which apply statewide and which adopt the 2000 edition of NFPA 101 with amendments.

- The Iowa Department of Public Safety administers the Iowa State Building Code, which adopts the 2003 editions of the IBC, IMC and IEBC. The Iowa State Building Code applies generally to buildings owned by the state of Iowa and to construction projects in local jurisdictions where the Iowa State Building Code is adopted. The only provisions of Iowa's codes that apply statewide relate to accessibility for persons with disabilities, energy efficiency and factory-built structures. The Iowa Department of Public Safety also administers the rules of the State Fire Marshall, which apply to a broad range of occupancies across the state, and which are largely based on NFPA standards, such as the exiting standards in the 2000 edition of NFPA 101, and the requirements for assembly occupancies, in the 2003 edition of NFPA 101. The rules of the State Fire Marshall also allow local jurisdictions to instead apply the IFC.

## 8. Summary of Factual Data and Analytical Methodologies

The primary methodology for updating the Wisconsin Fire Prevention Code, chapter Comm 14, and the Wisconsin Commercial Building Code, chapters Comm 60 to 66, has been a review and assessment of the latest editions of the national model codes that serve as the basis for the two Wisconsin codes. The department's review and assessment process involved the participation of various advisory councils. The members of the councils represent many stakeholders involved in the building industry, including designers, contractors, developers, regulators, labor, the fire service and the public. (A listing of the councils and the current members is provided at the end of this analysis.)

The department believes that the national model codes reflect current societal values with respect to protecting public health, safety and welfare in the design, construction, use, operation and maintenance of commercial buildings that serve as public buildings and places of employment. The two model code organizations (National Fire Protection Association, NFPA, and International Code Council, ICC) both utilize a process open to all parties in the development of their codes. More information, including background information in the development of the respective 2006 model code editions, may be obtained at the NFPA web site, http://www.nfpa.org, and the ICC web site, http://www.iccsafe.org.

For the Commercial Building Code, the review and assessment process involved an examination of the revisions that occurred in the 2003 and 2006 editions of the IBC, IECC, IMC, IFGC and IEBC. The assessment included the evaluation of the current rules under chapters Comm 61 to 65 that modified these ICC codes. In conjunction with the advisory councils, determinations are made as to whether the various technical requirements under the latest editions of the model codes are reasonable for addressing potential risks or concerns, and promoting the public health, safety and welfare. Such determinations may be made based upon experience, forecasts, intuition or projection.

The requirement for more automatic fire suppression in residential occupancies is the most prominent change in this proposal. The IBC has required automatic fire sprinklers in all buildings with Group R fire areas, other than townhouses, since 2001.

Wisconsin law under, s. 101.14 (4) (c), Stats., references the building code of the Building Officials and Code Administrators International, Inc., now the IBC, as a benchmark for establishing fire suppression rules to protect public health, safety and welfare for public buildings and places of employment, which includes multifamily dwellings.

Under the provisions of 1999 Wisconsin Act 43 and 2005 Wisconsin Act 78 the department was legislatively directed to require fire sprinklers in all new residence halls and dormitories as well as in residential facilities operated by fraternities and sororities regardless of size. These Acts correspond with the requirements for fire sprinklers contained in the 2006 edition of the IBC.

In January 2006 the fire protection systems council and the multifamily dwelling code council recommended that the department proceed to public hearing without amending the IBC sprinkler threshold requirements for residential sprinklers. A recommendation on the matter from the commercial building code council was tied.

Relating to the issue of automatic fire suppression for residential occupancies, the department conducted a survey of all 50 states and the District of Columbia. The survey was completed in May of 2006 and revealed that:

- Thirty-five states have statewide codes that apply to all new residential buildings accommodating three or more dwelling units.
- Thirty-three states have more stringent statewide fire sprinkler requirements for new residential buildings than under the current WCBC. (The WCBC requires automatic fire sprinklers in new construction at 21 or more dwelling units.)
- Twenty-three states require automatic fire sprinkler systems in all new residential buildings of three or more dwelling units, reflecting the sprinkler thresholds of the 2006 IBC.

**Fire Sprinkler Triggers within the United States and District of Columbia**

| Triggers for Sprinklers | Number of States | States | | |
|---|---|---|---|---|
| 3 Dwelling Units or 3 Stories | 23 | Arkansas<br>Connecticut<br>Delaware*<br>Florida<br>Georgia<br>Maine<br>Maryland<br>Massachusetts | Michigan<br>Montana<br>Nebraska<br>Nevada<br>New Mexico<br>New York<br>Oregon<br>Pennsylvania | Rhode Island<br>South Carolina<br>Utah<br>Vermont<br>Virginia<br>Washington<br>Wyoming |
| 4 Dwelling Units | 1 | Alaska | | |
| 5 Dwelling Units or 11 Occupants | 1 | California | | |
| 12 Dwelling Units or 2 Stories | 1 | New Jersey | | |
| 17 Dwelling Units or 3 Stories | 7 | Indiana<br>Minnesota<br>New Hampshire | North Carolina<br>North Dakota<br>Ohio | West Virginia<br>and<br>District of Columbia |
| 21 Dwelling Units | 1 | Wisconsin | | |
| 3 Stories | 1 | Kentucky | | |
| No Statewide Code | 15 | Alabama<br>Arizona<br>Colorado<br>Hawaii<br>Idaho | Illinois<br>Iowa<br>Kansas<br>Louisiana<br>Mississippi | Missouri<br>Oklahoma<br>South Dakota<br>Tennessee<br>Texas |

*Whenever building is greater 10,000 square feet.

Residential fires cause over 80 percent of the annual civilian fire fatalities in the United States. It is estimated that 3,030 civilian fire fatalities and 13,825 civilian fire injuries occurred in residential occupancies in 2005. (National Fire Protection Association Report – Fire Loss in the United States During 2005, July 2006) A U.S Fire Administration special report reveals that from 2001 to 2004 smoke alarms operated in 34 percent of fatal apartment fires and 12 percent of fatal one- and two- family dwelling fires. (OLS Newsletter, Vol. 21, Nos. 9 & 10)

The department surveyed all 860 Wisconsin fire departments in an attempt to identify the number of civilian and firefighter fire fatalities that had occurred in residential occupancies since 2001. As of September 1, 2006, 560 fire departments have reported:

- Two hundred forty-two civilian fire fatalities occurred in residential occupancies.
- Thirty-three fire fatalities occurred in residential buildings containing 3 to 20 dwelling units, twenty-eight of which occurred in buildings with 3 to 8 dwelling units.
- Eleven fire fatalities occurred in residential buildings containing more than 21 dwelling units.
- Eleven fire fatalities occurred in residential buildings where the number of dwelling units was unknown.
- One hundred eighty-seven of the fire fatalities occurred in one- and two- family dwellings.
- Two firefighter fatalities; one as a result of a heart attack and the other in a single family dwelling fire as a result of a collapsing floor.

The department studied the sprinkler installation costs of 64 recently constructed multifamily dwellings in Wisconsin. Sprinkler installation costs ranged from $0.59 to $3.33 per square foot of building area for the projects. The following table shows the number of buildings studied and the average cost per square foot for buildings in three size categories.

| **Average Reported Costs of Fire Sprinklers in Dollars/Sq. Ft.** | | | |
|---|---|---|---|
| No. of Dwelling Units in Building | 3 – 8 | 9 – 16 | 17 and up |
| No. of Buildings | 27 | 17 | 20 |
| Average cost per square foot | $1.87/sq. ft. | $1.45/sq. ft. | $1.44/sq. ft. |

The following table shows the estimated average sprinkler installation costs as a percentage of the estimated average total building construction cost for three building categories and whether urban or rural water supplies were available for the sprinkler system.

| **Average Estimated Cost of Fire Sprinklers as a Percent of Total Building Construction Cost*** | | | |
|---|---|---|---|
| No. of Dwelling Units in Building | 3 – 8 | 9 – 16 | 17 and up |
| No. of Buildings Studied | 27 | 17 | 20 |
| Average % of total cost (urban water) | 1.53% | 1.85% | 2.01% |
| Average % of total cost (rural water)** | 2.98% | 2.62% | 2.56% |

*Total building construction and sprinkler costs were estimated utilizing RSMeans software based upon the location and type of construction for each of the 64 buildings.
**The sprinkler installation cost included an additional $25,000 estimated to cover a water supply reservoir and pump for those projects where an urban water supply was unavailable.

The department compared the impact of increased construction costs due to fire sprinklers for residential occupancies to the cost of mortgage interest. Over the life of a 30-year mortgage, a one percent increase in the amount financed results in approximately the same cost to the consumer as a one-tenth of a percent increase in the mortgage interest rate. Put another way, a two percent increase in construction costs could be expected to impact consumers as much as a two-tenths percent increase in their mortgage rates. The department anticipates that consumers may react to increased costs due to fire sprinklers in much the same way that they react to other cost increases by reducing amenities or reducing the size of the building. A two percent reduction to a 900 square foot dwelling unit is 18 square feet or 6 inches along 36 feet of exterior wall.

Although fire sprinklers may increase the cost of construction, sprinklers do not increase the cost of land. In fact land costs on a per dwelling unit basis may decrease where fire sprinklers are utilized given that an increase in the maximum distance between a sprinklered building and fire department access roads is permitted.

The annual cost of code-required tests on fire sprinkler systems, for apartment and condominium buildings containing three to twenty dwelling units, ranges from $300 to $550, according to a major mechanical contractor active across Wisconsin.

The department found that the sprinkler installation costs in the above study were consistent with the current valuation estimates which are published by Marshall and Swift/Boeckh, LLC, as an industry benchmark for real estate appraisers throughout the country. Consequently, these costs are widely recognized as increasing the assessable or appraisable value of a building, which means these costs can be recouped when the building is sold.

Substantial insurance savings can result from the installation of fire sprinkler systems. Published accounts describe fire insurance savings of 5 to 40% for residential occupancies that are served by fire sprinklers. Savings vary by building construction type, location and type of usage. One insurance industry expert advised Commerce that reduced insurance premiums for sprinkled apartment and condominium buildings may pay for the cost of the sprinkler system over a period of 10 to 15 years.

Substantial savings can also be expected to accrue from the fire damage that would not occur because of the additional fire sprinkler protection. Reported data shows that residential fires caused an estimated $6.8 billion of direct property loss in the United States in 2005. Wisconsin's annual per capita proportion of that loss would be about $126 million.

Automatic fire sprinkler protection has an established worldwide record. Sprinkler protection has been attributed with reducing and often times eliminating the following effects from fires:

- Loss of life, both human and animal
- Physical injuries from smoke inhalation, burns, falls and contusions
- Mental anguish and distress
- Medical costs
- Lost wages
- Personal property loss
- Real property loss

- Cost of relocating and housing displaced residents
- Cost fire department and other emergency services

The process for reviewing and assessing the Fire Prevention Code was accomplished in a manner similar to that for the Commercial Building Code. The 2003 and 2006 editions of NFPA 1 were evaluated in relationship to the current rules of chapter Comm 14. Chapters Comm 7, Explosive Materials, and Comm 9, Manufacture of Fireworks, were also evaluated to determine where the various codes overlapped and whether the rules and codes could be consolidated.

**9. Analysis and Supporting Documents Used to Determine Effect on Small Business or in Preparation of Economic Impact Report**

The department utilized ten advisory councils in analyzing and developing the proposed revisions to the Fire Prevention Code and the Commercial Building Code. The councils involve a variety of organizations whose memberships include many types of small businesses. The department utilizes these councils to gather information on potential impacts in complying with the both technical and administrative requirements of the codes. A responsibility of council members is to bring forth concerns their respective organizations may have with the requirements, including concerns regarding economic impacts. (Copies of the council meetings summaries are available on the Safety and Building Division web site, http://www.commerce.state.wi.us/SB/SB-CodeCouncilsComBldgSum.html .) The department also offers an e-mail subscription service to anyone who is interested in rule development and/or council activities. The service provides e-mail notification of council meetings, meeting agendas and council meeting progress reports. Currently, there over one thousand subscriptions for information pertaining to the commercial building program.

An economic impact report pursuant to section 227.137, Stats., has not been required to be prepared.

**10. Effect on Small Business**

The requirements of the Fire Prevention Code and the Commercial Building Code impact all businesses, regardless of size, utilizing public buildings and places of employment in Wisconsin. The codes impact a variety of businesses, including small businesses, particularly those businesses that design, build, or maintain commercial buildings; provide or produce building materials or components; own commercial buildings; or occupy commercial buildings. It is indeterminable how many small businesses may be impacted by the rules in some manner.

The potential effects of the codes occur on two basic levels, administrative and technical. The codes dictate certain administrative procedural requirements that are to be followed in order to acquire various approvals. For the most part, the codes establish numerous technical standards that are to be adhered to when designing, constructing, using, operating or maintaining a commercial building in order to protect public health, safety and welfare.

The proposed rule revisions do not substantially modify the current administrative requirements of the Fire Prevention Code or the Commercial Building Code. Therefore, this type of impact on small businesses will not substantially change.

How the codes' technical standards may impact small businesses is dependent upon many variables. The proposed revisions for the Commercial Building Code do not apply retroactively to existing buildings. The proposed revisions would apply when a new building or modification to an existing building is proposed. The various advisory councils did not identify major economic concerns with the proposed technical revisions updating the Fire Prevention Code or the Commercial Building Code to the latest national model codes as amended in this proposal.

**Council Members and Representation**

The proposed rules were developed with the assistance of the following Advisory Councils:

**Commercial Building Code Council**

Janet Harter, Fire Chiefs Association
Curt Hastings, Building Contractors
Joe Jameson, Municipalities/Building Inspectors
Joseph Jurkiewicz, Architects
David Keller, Building Owners
Steve Klessig, Associated Builders and Contractors
Terry Kennedy, Engineers
Dennis Krutz, Insurance Organizations
David Lind, Fire Inspectors Association
William Napier, State Facilities
Ed Ruckriegel, Madison Fire Department
Gary Ruhl, Tradesworkers and Craftsworkers
Chris Rute, City of Milwaukee
Michael Shoys, Building Owners
Russ Spahn, Fire Chiefs Association
Fred Stier, Builders and Contractors

**Multifamily Dwelling Code Council**

Kraig Biefeld, Fire Service
Jeffery Brohmer, Fire Service
Emory Budzinski, Manufacturer/Supplier Wood Products
Beth Gonnering, Building Contractors/Developers
Edward Gray, Labor
Greta Hansen, Public
James Klett, Architects/Engineers/Developers
Michael Morey, Contractors/Developers
Dave Nitz, Building Inspectors
Richard Paur, Building inspectors
Nicholas Rivecca, Manufacturer/Supplier (Concrete)
William Roehr, Labor
Korrine Schneider, Public
Kevin Wippurfurth, Drywall Distributors

**Alteration and Change of Occupancy**

Joel Becker, Associated General Contractors of Greater Milwaukee
Steve Gleisner, Milwaukee Fire Department
Bruce Johnson, Wisconsin Builders Association
David Lind, Wisconsin State Fire Inspectors Association
Paul Menches, Onalaska, Wisconsin State Fire Chiefs Association
John Periard, Building Owners and Managers Association
Charles Quagliana, American Institute of Architects
Chris Rute, City of Milwaukee
Jim Sewell, Wisconsin Historical Society
Harry Sulzer, City of Madison
David Vos, Developer of Historic Properties

**Energy Conservation**

Jeffrey Boldt, Wisconsin Chapter ASHRAE
Dan Dehnert, Associated General Contractors
Ross DePaola, Clean Wisconsin
Timothy Kritter, Associated Builders and Contractors
Kevin Lichtfuss, Wisconsin Association of Consulting Engineers
Dave Osborne, Wisconsin Builders Association
Gerald Schulz, Wisconsin Chapter National Electrical Contractors
Harry Sulzer, League of Wisconsin Muncipalities
Robert Wiedenhoefer, Sheet Metal and Air Conditioning Contractors

**Fire Safety**

Peter Braun, Wall-tech Inc.
Thomas Clark, Pleasant Prairie Fire and Rescue Department
John Eagon, American Institute of Architects, Wisconsin Society
Michael Gardner, Gypsum Association
Jeff Leckwee, Bricklayers Local 13
Richard Licht, International Firestop Council
David Lind, Wisconsin Fire Inspectors Association
Kerry Vondross, County Materials Corporation
David Wheaton, City of Wauwatosa
Patrick Winger, Winger Concrete Products

**Fire Protection Systems**

Brandon Bartow, Bartow Builders
Jeff Bateman, Pioneer Fire Protection
Ron Bergquist, Viking Supply Net
Tom Binish, A&A Fire and Security
Thomas Clark, Pleasant Prairie Fire and Rescue Department
John Crook, City of Fitchburg
Joseph Donato, Gentex Corporation
John Eagon, American Institute of Architects, Wisconsin Society
Joseph Feuling, Sentra Protective Systems
Janet Harter, Eau Claire Fire Department
Chris Schoenbeck, Sprinkler Fitters Local 183
Curt Waddell, WPI Communications Systems

**HVAC**

Richard Lund, Plumbing-Heating-Cooling Contractors Association
Michael Mamayek, Plumbing and Mechanical Contractors of Milwaukee and SE Wisconsin
Richard Pearson, American Society of Heating, Refrigeration, and Air-Conditioning Engineers, Madison Chapter
John Periard, Building Owners and Managers Association of Wisconsin
Daniel Rehbein, American Council of Engineering Companies of Wisconsin
Dan Rogers, Sheet Metal and Air-Conditioning Contractors of Wisconsin
David Stockland, Associated Builders and Contractors of Wisconsin
Harry Sulzer, League of Municipalities

**Means of Egress and Accessibility**

Larry Earll, Wisconsin Department of Administration
Cleo Eliason, Easter Seal Society of Wisconsin
Joesph Jurkiewicz, American Institute of Architects, Wisconsin Society
Larry Palank, Associated General Contractors of Greater Milwaukee
Richard Pomo, Wisconsin Council of the Blind
Ed Solner, American Institute of Architects, Wisconsin Society
Monica Sommerfeldt, Wisconsin Builders Association
David Wheaton, Wisconsin Building Inspectors Association

**Structural**

Greg Bares, Wisconsin Department of Administration
Steven Cramer, UW Madison Department of Civil and Environmental Engineering
David Hyzer, American Institute of Architects - Wisconsin
Michael Oliva, UW Madison Department of Civil and Environmental Engineering
John Rave, Associated Builders and Contractors of Wisconsin
Robert Schumacher, American Society of Civil Engineers
Alan Wagner, American Society of Civil Engineers
Michael West, American Society of Civil Engineers

**Comm 14 – Fire Prevention Council**

John Ashley, Wisconsin Association of School Boards
Gregg Cleveland, Wisconsin State Fire Chiefs Association
Marty King, Professional Fire Fighters of Wisconsin
Dave Lind, Wisconsin Fire Inspectors Association
John Periard, Building Owners and Managers Association
Jim Stormer, Wisconsin State Fire Fighter's Association Inc.

* * * *

SECTION 1. Comm 2.31 (1) (a) is amended to read:

**Comm 2.31 (1)** (a) *General*. Fees relating to the submittal of all plans, submitted in accordance with the requirements of chs. Comm ~~61 to 65~~ 60 to 66, shall be determined in accordance with this section.

SECTION 2. Comm 2.52 (3) (title) and (a) are amended to read:

**Comm 2.52 (3)** (title) PETITIONS FOR VARIANCE ON RULES UNDER CHS. COMM ~~61 TO 65~~ 60 TO 66, WISCONSIN COMMERCIAL BUILDING CODE. (a) ~~The~~ Except as provided under sub. (4), the fee for reviewing petitions for variance under chs. Comm ~~61 to 65~~ 60 to 66 shall be $500.00 per petition.

SECTION 3. Comm 2.52 (4) is amended to read:

**Comm 2.52 (4)** (title) PETITIONS FOR VARIANCE ON ~~RULES UNDER CH. COMM 70,~~ HISTORIC ~~BUILDING CODE~~ BUILDINGS. The fee for reviewing petitions for variance on rules ~~under ch. Comm 70~~ for historic buildings shall be $300.00 per petition.

SECTION 4. Comm 2.52 (8) (b) is amended to read:

**Comm 2.52 (8)** (b) The fees for processing petitions for variance ~~under ch. Comm 70~~ on rules for historic buildings, pursuant to s. 101.121 (3) (b), Stats., shall be as specified in sub. (4).

SECTION 5. Comm 3.03 (5) (d) is amended to read:

**Comm 3.03 (5)** (d) ~~Petitions~~ Pursuant to s. 101.121 (3) (b), Stats., petitions for variance from a rule ~~contained in ch. Comm 70~~ for a historic building shall be processed by the division within 10 business days ~~of receipt of the required information~~.

SECTION 6. Comm 5.34 (1) is amended to read:

**Comm 5.34 (1)** GENERAL. No person may perform structural welding under chs. Comm 34 and ~~61 to 65~~ 60 to 66 unless the person holds a registration issued by the department as a registered welder.

SECTION 7. Comm 5.61 (1) is amended to read:

**Comm 5.61 (1)** GENERAL. A person who holds a certification issued by the department as a certified commercial building inspector may conduct inspections of public buildings and places of employment for the purpose of administering and enforcing chs. Comm ~~61 to 65, 70~~ 60 to 66 and 75 to 79.

SECTION 8. Chapter Comm 7 is repealed and recreated to read:

## Chapter Comm 7
## Explosives and Fireworks

### Subchapter I – General Requirements

**Comm 7.01 Purpose. (1)** EXPLOSIVES. Pursuant to s. 101.15 (2) (e), Stats., the purpose of this chapter is to establish standards for the use of explosive materials.

**(2)** FIREWORKS. Pursuant to s. 167.10 (6m), Stats., the purpose of this chapter is to establish licensing procedures for the manufacture of fireworks.

**Comm 7.02 Scope. (1)** EXPLOSIVES. The provisions of this chapter establish uniform limits on permissible levels of blasting resultants relating to the use of explosive materials.

**Note:** See ch. Comm 5 for rules pertaining to the licensing of blasters. See ch. Comm 14 for rules pertaining to general safety and fire prevention related to the storage, handling of explosive materials. See chs. Comm 60 to 66 for rules pertaining to the design and construction of buildings related to the storage of explosive materials.

**(2)** FIREWORKS. The provisions of this chapter establish licensing and inspection standards relating to the manufacture of fireworks.

**Note:** See s. 167.10, Stats., and ch. Comm 14 for requirements pertaining to the manufacture, sale, storage and handling of fireworks.

**Comm 7.03 Fees.** Fees for safety inspections and petitions for variance shall be submitted as specified in ch. Comm 2.

**Comm 7.06 Petition for variance.** The department shall consider and may grant a variance to a provision of this chapter in accordance with ch. Comm 3. The petition for variance shall include, where applicable, a position statement from the fire department having jurisdiction.

**Note:** Chapter Comm 3 requires the submittal of a petition for variance form (SBD-9890) and a fee, and that an equivalency is established in the petition for variance that meets the intent of the rule being petitioned. Chapter Comm 3 also requires the department to process regular petitions within 30 business days and priority petitions within 10 business days.

**Comm 7.10 Penalties. (1)** EXPLOSIVES. Penalties for violation of any provision in this chapter relating to explosives shall be assessed in accordance with s. 101.02 (12) and (13), Stats.

**Note:** Section 101.02 (13) (a), Stats., indicates penalties will be assessed against any employer, employee, owner or other person who fails or refuses to perform any duty lawfully enjoined, within the time prescribed by the department, for which no penalty has been specifically provided, or who fails, neglects or refuses to comply with any lawful order made by the department, or any judgment or decree made by any court in connection with ss. 101.01 to 101.25, Stats. For each such violation, failure or refusal, such employee, owner or other person must forfeit and pay into the state treasury a sum not less than $10 nor more than $100 for each violation.

**Note:** Section 101.02 (12), Stats., indicates that every day during which any person, persons, corporation or any officer, agent or employee thereof, fails to observe and comply with an order of the department will constitute a separate and distinct violation of such order.

**(2)** FIREWORKS. Pursuant to s. 167.10 (9) (g), Stats., a person who violates any provision of this chapter relating to fireworks may be fined not more than $10,000 or imprisoned not more than 10 years or both.

## Subchapter II – Definitions and Standards

**Comm 7.20 Definitions.** In this chapter:

**(1)** "Airblast" means an airborne shock wave resulting from the detonation of explosives.

**(2)** "Barrier" means a material object that separates, keeps apart, or demarcates in a conspicuous manner such as cones, a warning sign, or tape.

**(3)** "Blast area" means the area of a blast within the influence of flying rock, missiles, gases, and concussion as determined by the blaster in charge.

**(4)** "Blast site" means the area where explosive material is handled during loading of blastholes, including 50 feet in all directions from the perimeter formed by the loaded holes. A minimum of 30 feet may replace the 50-foot requirement if the perimeter of loaded holes is marked and separated from non-blast site areas by a barrier. The 50-foot or 30-foot distance requirements, as applicable, apply in all directions along the full depth of the blasthole. In underground mines, at least 15 feet of a solid rib, pillar, or broken rock may be substituted for the 50 foot distance.

**(5)** "Blaster" means any individual holding a valid blaster's license issued by the department.

**(6)** "Blaster in charge" means that qualified person in charge of, and responsible for, the loading and firing of a blast.

**(7)** "Blasting" means any method of loosening, moving or shattering masses of solid matter by use of an explosive.

**(8)** "Blasting operation" means any operation, enterprise or activity involving the use of blasting.

**(9)** "Blasting resultants" means the physical manifestations of forces released by blasting, including but not limited to projectile matter, vibration and concussion, which might cause injury, damage or unreasonable annoyance to persons or property located outside the controlled blasting site area.

**(10)** "Controlled blasting site area" means the area that surrounds a blast site and that meets one of the following conditions:

(a) Is owned by the operator.

(b) With respect to which, because of property ownership, an employment relationship or an agreement with the property owner, the operator can take reasonably adequate measures to exclude or to assure the safety of persons and property.

**(11)** "Department" means the department of commerce.

**(12)** "Explosive" means any chemical compound, mixture or device, the primary or common purpose of which is to function by explosion unless the compound, mixture or device is otherwise classified by the department by rule.

**(13)** "Explosive materials" means explosives, blasting agents and detonators. The term includes, but is not limited to, dynamite and other high explosives, slurries, emulsions, water gels, blasting agents, black powder, pellet powder, initiating explosives, detonators, safety fuses, squibs, detonating cord, igniter cord and igniters.

**(14)** "Fireworks" has the meaning given in s. 167.10 (1) (intro.), Stats., and includes a device listed under s. 167.10 (1) (e), (f) or (i) to (n), Stats.

**Note:** Section 167.10 (6m) (a), Stats., states that a person must have a fireworks manufacturing license in order to manufacture fireworks or a device listed under s. 167.10 (1) (e), (f) or (i) to (n), Stats.

**Note:** Under s. 167.10 (1) (intro.), Stats., "fireworks" means anything manufactured, processed or packaged for exploding, emitting sparks or combustion which does not have another common use. Section 167.10 (1) (e), (f) and (i) to (n), Stats., read as follows:

Section 167.10 (1) (e) A cap containing not more than one-quarter grain of explosive mixture, if the cap is used or possessed or sold for use in a device which prevents direct bodily contact with a cap when it is in place for explosion.

(f) A toy snake which contains no mercury.

(i) A sparkler on a wire or wood stick not exceeding 36 inches in length that is designed to produce audible or visible effects or to produce audible and visible effects.

(j) A device designed to spray out paper confetti or streamers and which contains less than one-quarter grain of explosive mixture.

(k) A fuseless device that is designed to produce audible or visible effects or audible and visible effects, and that contains less than one-quarter grain of explosive mixture.

(L) A device that is designed primarily to burn pyrotechnic smoke-producing mixtures, at a controlled rate, and that produces audible or visible effects, or audible and visible effects.

(m) A cylindrical fountain that consists of one or more tubes and that is classified by the federal department of transportation as a Division 1.4 explosive, as defined in 49 CFR 173.50.

(n) A cone fountain that is classified by the federal department of transportation as a Division 1.4 explosive, as defined in 49 CFR 173.50.

**(15)** "Flyrock" means rock that is propelled through the air from a blast.

**(16)** "Ground vibration" means a shaking of the ground caused by the elastic wave emanating from a blast.

**(17)** "Inhabited building" means a building regularly occupied in whole or in part as a habitation for human beings, or any church, schoolhouse, railroad station, store or other structure where people are accustomed to assemble, except any building or structure occupied in connection with the manufacture, transportation, storage or use of explosive materials.

**(18)** "Operator" means the person who is responsible for the operation at a mine, pit, quarry, or construction site where blasting activity occurs.

**(19)** "Particle velocity" means any measure of ground vibration describing the velocity at which a particle of ground vibrates when excited by a seismic wave.

**(20)** "Person" means any individual, corporation, company, association, firm, partnership, society or joint stock company.

**(21)** "Unreasonable annoyance" means an excessive, repeated noise, action or other disturbance that is not justified by reason.

**Comm 7.21 Adoption of Standards.** NFPA 495, *Explosive Materials Code*, 2006, subject to the modifications specified in this chapter, is hereby incorporated by reference into this chapter.

**Note:** A copy of NFPA 495, *Explosive Materials Code* is on file in the offices of the department, the secretary of state, and the revisor of statutes. Copies of NFPA 495, *Explosive Materials Code* may be purchased from the National Fire Protection Association, 1 Batterymarch Park, Box 9101, Quincy, MA, 02269-9101.

## Subchapter III – Use of Blasting Materials

**Comm 7.30 General.** The use of explosive materials for blasting shall be executed in accordance with NFPA 495 chapter 10.

**Comm 7.31 Changes, additions or omissions to NFPA 495. (1)** Changes, additions or omissions to NFPA 495 chapter 10 are specified in this subchapter and are rules of the department and are not requirements of the NFPA 495 standard.

**(2)** These are department rules in addition to the requirements in NFPA 495 section 10.1.3:

(a) *Blaster requirements.* When blasting operations are conducted in communities, the shots shall be designed and initiated by a properly licensed Class 5, 6 or 7 blaster.

**Note:** See ch. Comm 5 for blaster license requirements and classifications.

(b) *Notifications.* Any person conducting blasting operations in a community shall notify the department, the local fire department and the local law enforcement agency of the date and location of the blasting operation. Notification to the department shall be made on forms provided by the department.

**Note:** Copies of the notice of blasting in a community (form SBD-7336) are available at no charge from the Safety and Buildings Division, P.O. Box 7302, Madison, WI 53707, telephone 608/266-7529, or on the Internet at www.commerce.wi.gov/SB.

**(3)** These are department rules in addition to the requirements in NFPA 495 section 10.2:

(a) Explosive materials used in underground blasting shall be fume class 1; however, fume class 2 and fume class 3 may be used if adequate ventilation has been provided as determined by the blaster in charge.

**Note:** Fume class 1 explosives produce less than 0.16 cubic feet of poisonous gases per 1-1/4 x 8" cartridge when detonated in the Bichel Gauge.

(b) All blast holes in open work shall be stemmed to the collar or to a point which will confine the charge.

**(4)** These are department rules in addition to the requirements in NFPA 495 chapter 10:

(a) *Required log.* A blasting log shall be required for each blast fired.

(b) *Filing and availability.* All blasting logs shall be kept on file by the blaster for a minimum period of 3 years, and shall be made available to the department upon request.

(c) *Information.* Each blasting log shall contain at least all of the following information:

1. Name, signature and license number of the blaster in charge of the blast.

2. Specific blast location, including address, bench and station number if applicable.

3. Type of blasting operation.

4. Date and time of the blast.

5. Weather conditions at the time of the blast.

6. Diagram of the blast layout and the delay pattern.

7. Number of holes.

8. Hole depth and diameter.

9. Spacing.

10. Burden.

11. Maximum holes per delay.

12. Maximum pounds of explosives per delay.

13. Depth of top stemming used.

14. Number, type and length of stemming used between decks.

15. Total pounds and type of explosives used.

16. Distance to nearest inhabited building not owned by the operator.

17. Type of initiation used.

18. Seismographic and airblast records, which shall include all of the following:

a. Type of instrument and last laboratory calibration date.

b. Exact location of instrument and the date, time, and distance from the blast.

c. Name of the person and firm taking the reading.

d. Trigger levels for ground and air vibrations.

e. The vibration and airblast levels recorded.

## Subchapter IV – Blasting Resultants

**Comm 7.40 Regulation of blasting resultants.** Pursuant to s. 101.15 (2) (e), Stats., the purpose of this subchapter is to provide for the establishment of uniform limits on permissible levels of blasting resultants to reasonably assure that blasting resultants do not cause injury, damage or unreasonable annoyance to persons or property outside any controlled blasting site area.

**Comm 7.41 Preblasting notification. (1)** PREBLASTING SURVEY. At least 24 hours prior to initial blasting at a blast site, the blaster in charge shall make a reasonable effort to notify in writing or verbally all residents or owners of affected dwellings or other structures, as determined under sub. (2), that a blasting operation is to begin. The blaster in charge shall offer to perform a preblasting survey for the residents or owners. If a resident or owner requests a copy of the preblasting survey, the blaster in charge shall provide a copy for not more than the actual cost of the copy within 48 hours of the request.

**Note:** A preblasting survey provides a baseline record of the pre-existing condition of a structure against which the effects of blasting can be assessed, and it should include the interior and exterior of the dwelling. While striving to minimize airblast, flyrock and ground vibrations, the blaster should inform local residents of the need for and the importance of blasting. A preblasting survey increases communications between the public and the blaster, helps the blaster to maintain good community relations, and is in the best interest of the owner and the blaster.

**(2)** AFFECTED BUILDINGS. Affected dwellings or other structures shall be determined based on the scaled-distance equation, $W = (D/Ds)^2$. Using a scaled-distance factor

Ds of 55, affected dwellings or other structures shall be those located within the distance D of the controlled blasting site area for the weight per delay W of explosives to be used.

**Note:** An example calculation to determine D is as follows: For 4 pounds of explosives, $D = Ds(W)^{1/2} = 55 (4)^{1/2} = 110$ feet.

**Comm 7.42 Blasting schedules.** All surface blasting shall be conducted between sunrise and sunset, unless one of the following conditions applies:

**(1)** More restrictive time periods are specified by the department.

**(2)** The blasting is approved by the department based on a showing by the operator that the public will not be adversely affected by noise and other impacts.

**Comm 7.43 Instrumentation.** All seismographs used to determine compliance with this subchapter shall meet the following minimum specifications:

**(1)** Seismic frequency range: 2 to 200 Hz (±3 Hz).

**(2)** Acoustic frequency range: 2 to 200 Hz (±1 dB).

**(3)** Velocity range: 0.02 to 4.0 inches/second.

**(4)** Sound range: 110 to 140 dB linear.

**(5)** Transducers: Three mutually perpendicular axes.

**(6)** Recording: Provide time-history of waveform.

**(7)** Calibration: Be laboratory calibrated as often as necessary, but at least once every 12 months according to manufacturer's recommendations.

**Comm 7.44 Control of adverse effects. (1)** GENERAL REQUIREMENTS. Blasting shall be conducted so as to prevent injury and unreasonable annoyance to persons and damage to public or private property outside the controlled blasting site area.

**(2)** FLYROCK. Flyrock traveling in the air or along the ground shall meet all of the following conditions:

(a) Remain within the controlled blasting site area.

(b) Not be cast more than one-half the distance to the nearest inhabited building within or outside of the controlled blasting site area.

**(3)** AIRBLAST. (a) An airblast may not exceed 133 peak dB at the location of any dwelling, public building or place of employment outside the controlled blasting site area.

(b) The blaster shall conduct monitoring of every blast to determine compliance with the airblast limit. The measuring system used shall have a lower-end flat frequency response of not more than 2 Hz and an upper-end flat frequency response of at least 200 Hz.

**(4)** GROUND VIBRATION. (a) 1. The maximum ground vibration at the location of any dwelling, public building or place of employment outside the controlled blasting site area shall be established in accordance with the blasting-level chart of par. (b).

2. All structures in the vicinity of the controlled blasting site area, not listed in subd. 1., such as water towers, pipelines and other utilities, tunnels, dams, impoundments and underground mines, shall be protected from damage by establishment by the blaster of a maximum allowable limit on the ground vibration. The blaster shall establish the limit after consulting with the owner of the structure.

(b) The blaster shall use the ground vibration limits specified in Figure 7.44 to determine the maximum allowable ground vibration. Ground vibration shall be measured as the particle velocity. Particle velocity shall be recorded in 3 mutually perpendicular directions.

(c) The blaster shall make and keep a seismograph record including both particle velocity and vibration frequency levels for each blast. The method of analysis shall be subject to discretionary review by the department.

(d) For quarry operations, the blaster shall report any ground vibration levels to the department that are above 0.75 inch per second with frequencies less than 40 Hz.

**Note:** Local municipalities may have more restrictive regulations than the department.

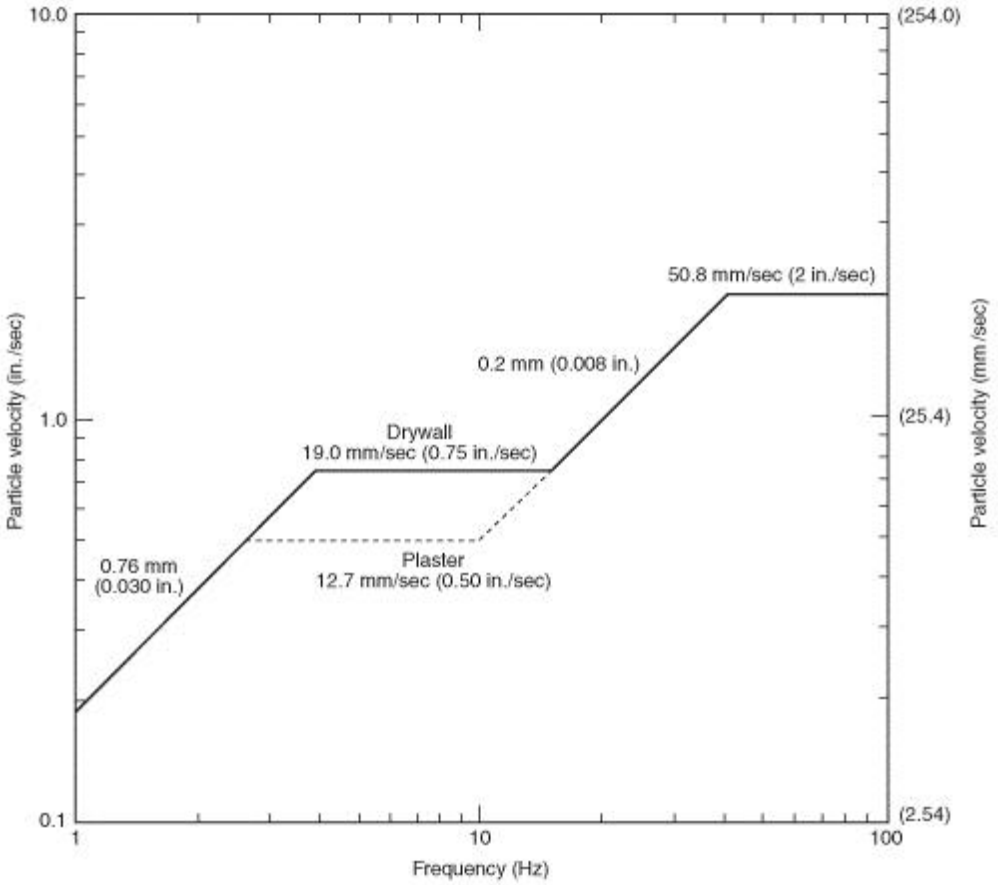


**Figure 7.44 - Blasting Level Chart**

## Subchapter V – Fireworks

**Comm 7.50 Licensing of fireworks manufacturers. (1)** LICENSE REQUIRED. No person may manufacture fireworks unless that person holds a license issued by the department in accordance with ch. Comm 5.

**(2)** POSTING. A fireworks manufacturer license shall be posted at each plant where fireworks are to be manufactured.

**Comm 7.51 Inspections. (1)** GENERAL. The authorized inspectors of the department may enter and inspect at reasonable times the premises on which each person licensed under this chapter manufactures fireworks.

**(2)** INITIAL INSPECTIONS. Upon receipt of an application for a fireworks manufacturing license, the department or the department's designated deputy shall inspect the premises for which the application is made.

**(3)** PERIODIC INSPECTIONS. The department or the department's designated deputy shall inspect a fireworks manufacturing plant at least once a year.

**(4)** FEDERAL INSPECTION ACCEPTANCE. Where an inspection of a fireworks manufacturing plant has been conducted by the federal bureau of alcohol, tobacco, firearms and explosives, the department may accept a federal inspection report in lieu of the department inspection.

SECTION 9. Chapter Comm 9 is repealed.

SECTION 10. Comm 10.30 is repealed.

SECTION 11. Comm 14 is repealed and recreated to read:

## Chapter Comm 14
## FIRE PREVENTION

### Subchapter I - Adoption and Application of NFPA 1, *Uniform Fire Code*

**Comm 14.001 (1)** (a) *Adoption of model fire code.* NFPA 1, *Uniform Fire Code*™ – 2006, subject to the modifications specified in this chapter, is hereby incorporated by reference into this chapter.

**Note:** A copy of NFPA 1, *Uniform Fire Code* is on file in the offices of the department and the revisor of statutes. Copies of NFPA 1, *Uniform Fire Code* may be purchased from the National Fire Protection Association, 1 Batterymarch Park, Box 9101, Quincy, MA, 02269-9101.

(b) *Application of model fire code.* The use, operation and maintenance of public buildings and places of employment shall comply with par. (a), except as provided in this chapter.

**(2) Alternate model fire code.** (a) Where a municipality has by ordinance adopted requirements of the *International Fire Code*® - 2006 and any additional requirements, that, in total, are equivalent to sub. (1) and subch. II, the department will not consider that ordinance to be in conflict with sub. (1) and subch. II; and property owners or managers, or employers, need only comply with that ordinance.

(b) Any special order granted by the department prior to [the effective date of this section . . . Revisor inserts date] that authorized a municipality to use the *International Fire Code*® - 2000 in lieu of NFPA 1 and subch. III of a previous edition of this chapter shall terminate on [the effective date of this section . . . Revisor inserts date].

### Subchapter II - Modifications of NFPA 1, *Uniform Fire Code*

**Note:** The sections in this subchapter are generally numbered to correspond to the chapter and section numbering of NFPA 1, *Uniform Fire Code*; e.g., s. Comm 14.01 contains modifications of NFPA 1, chapter 1.

**Comm 14.01 Administration. (1)** SCOPE. These are department rules in addition to the requirements in NFPA 1 section 1.1:

(a) Except as provided in pars. (b) to (e), this chapter applies to all public buildings and places of employment.

(b) This chapter does not apply to buildings or situations listed under the exclusions in ss. 101.01 (11) and (12), Stats., or under the exemptions in s. 101.05, Stats.

**Note:** See Appendix for a reprint of the above-referenced sections of the Statutes.

(c) This chapter does not apply to all of the following types of buildings, structures or situations:

1. A building or structure located on Indian reservation land held in trust by the United States.

2. Buildings and portions of buildings that are exempted by federal statutes or treaties.

3. Portions of buildings leased to the federal government provided all of the following conditions are met:

a. A statement is filed with the register of deeds that describes the steps necessary for compliance to this chapter if the space is converted to a nonexempt use.

b. The statement filed with the register of deeds is recorded in a manner that will permit the existence of the statement to be determined by reference to the property where the building is located.

c. The owner of the building submits a copy of the recorded document to the department or its authorized representative.

4. Buildings and structures that are on a farm premises and used exclusively for farming purposes, provided any use of the building or structure by the public consists only of consumers directly receiving farm commodities, substantially all of which have been planted or produced on the farm premises. In this application, "substantially all" means at least 90 percent of the commodities were planted or produced on the farm premises.

5. A one- or 2-family dwelling used as a foster home, treatment foster home, or group home, or as a child caring institution having a capacity for 8 or fewer children, all as defined in s. 48.02, Stats.

**Note:** The definitions in s. 48.02, Stats., limit foster homes to no more than 4 children unless all the children are siblings, limit treatment foster homes to no more than 4 children, and limit group homes to no more than 8 children. Where permitted by the department of health and family services, a group home or a child caring

institution having a capacity for 8 or fewer children may be located in a one- and 2-family dwelling as a community living arrangement, as defined in s. 46.03 (22), Stats.

6. A one- or 2-family dwelling in which a public or private day care center for 8 or fewer children is located.

7. That portion of or space within a one- or 2-family dwelling in which a home occupation is located.

(d) In this section, "home occupation" means any business, profession, trade or employment conducted in a person's dwelling unit, that may involve the person's immediate family or household and a maximum of one other unrelated person, but does not involve any of the following:

1. Explosives, fireworks or repair of motor vehicles.

2. More than 25% of the habitable floor area of the dwelling unit.

**Note:** The scope of NFPA 1,*Uniform Fire Code* is broader than the scope of this chapter. For example, that code contains requirements for premises which do not include a public building or place of employment. Any requirements which are beyond the scope of this chapter cannot be enforced under this chapter, but may be adopted by local ordinances. Those ordinances may be adopted under statutory authority that is separate from the department's statutory authority.

(e) 1. The requirements in sub. (9) apply to all fire responses, rather than only to fire responses for public buildings and places of employment.

2. The requirements in sub. (11) (e) 2. apply to fire responses to first alarms for all buildings, rather than only for public buildings.

**(2)** APPLICATION. Substitute the following wording for the requirements in NFPA 1 section 1.3.1:

(a) *General.* 1. This chapter applies to all of the following unless specifically stated otherwise in this chapter:

a. The use and operation of all public buildings and places of employment that exist on or after the effective date of this chapter.

b. The inspection, testing and maintenance of all fire safety features as specified in this chapter, for all public buildings and places of employment, that exist on or after the effective date of this chapter.

2. The design and construction requirements in NFPA 1, *Uniform Fire Code* that apply to public buildings or places of employment are not included as part of this chapter, except as specified in subd. 4. a.

**Note:** See chs. Comm 60 to 66 for design and construction requirements for public buildings and places of employment.

3. The codes and standards referenced in this chapter and additional codes and standards subsequently referenced therein shall apply to the prescribed extent of each such reference, except as modified by this chapter.

4. a. The design and construction requirements in NFPA 1 chapter 18 for fire department access and water supply are included as part of this chapter.

b. The requirements in NFPA 1 sections 18.2.3 and 18.3 do not apply to buildings constructed prior to the effective date of this subdivision.

(b) *Conflicts*. 1. Where any rule of the department differs from a requirement within a document referenced in this chapter, the rule of the department shall apply.

2. Where rules of the department specify conflicting requirements, types of materials, methods, processes or procedures, the most restrictive rule shall govern, except as provided in subd. 3.

3. Where there is a conflict between a rule that prescribes a general requirement and a rule that prescribes a specific or more detailed requirement, the specific or more detailed requirement shall govern, except as provided in subd. 1.

(c) *Department authority*. Pursuant to s. 101.02 (1), Stats., the department reserves the right to interpret the requirements in this chapter and in all adopted codes and standards.

**Note:** Section 101.02 (1), Stats., reads as follows: "The department shall adopt reasonable and proper rules and regulations relative to the exercise of its powers and authorities and proper rules to govern its proceedings and to regulate the mode and manner of all investigations and hearings."

(d) *Local ordinances*. 1. Pursuant to s. 101.02 (7), Stats., a city, village, town or local board of health may enact and enforce additional or more restrictive requirements for public buildings and places of employment, provided the requirements do not conflict with this chapter.

2. Nothing in this chapter affects the authority of a municipality or county to enact and enforce requirements for fire districts, land use, or zoning under ss. 59.69, 60.61, 60.62, 61.35, and 62.23 (7), Stats.

(e) *Alternatives*. Nothing in this chapter is intended to prohibit or discourage the design and use of new materials or components, or new processes, elements or systems, provided written approval from the department is obtained first.

(f) *Temporary use*. A municipal fire or building code official may allow a building or a portion of a building to be used temporarily in a manner that differs from the approved use for the building or space, or may approve a temporary building to be used by the public, subject to all of the following provisions:

1. The official shall determine the time frame within which the temporary use is permitted, based on the extent hazards are created by the temporary use. This time frame may not exceed 180 days, except the official may grant extensions for demonstrated cause.

2. Except as provided in subd. 3., buildings or spaces considered for temporary use shall conform to the requirements of this chapter as necessary to ensure the public safety, health and general welfare.

3. The official may require additional safety requirements for a temporary use as a trade-off for any safety provisions that may be lacking.

4. The official may terminate the approval for a temporary use at any time and order immediate discontinuance of the use or complete evacuation of the building or space.

**Note:** The department and other state agencies may have additional rules that affect the design, construction, maintenance and use of public buildings, places of employment and premises, including chs. Comm 5, Licenses, Certifications, and Registrations; Comm 7, Explosives and Fireworks; Comm 10, Flammable and Combustible Liquids; Comm 16, Electrical; Comm 18, Elevators, Escalators and Lift Devices; Comm 40, Gas Systems; Comm 41, Boilers and Pressure Vessels; Comm 43, Anhydrous Ammonia; Comm 45, Mechanical Refrigeration; Comm 60 to 66, Commercial Building Code; Comm 75 to 79, Buildings Constructed Prior to 1914; Comm 81 to 87, Plumbing; Comm 90, Public Swimming Pools; and Comm 91, Sanitation. The department's Safety and Buildings Division administers all of these listed codes except ch. Comm 10, which is administered by the department's Environmental and Regulatory Services Division.

**(3)** PETITION FOR VARIANCE. Substitute the following wording for the requirements in NFPA 1 section 1.4.3: The department shall consider and may grant a variance to a provision of this chapter in accordance with ch. Comm 3. The petition for variance shall include, where applicable, a position statement from the fire department having jurisdiction.

**Note:** Chapter Comm 3 requires the submittal of a petition for variance form (SBD-9890) and a fee, and that an equivalency is established in the petition for variance which meets the intent of the rule being petitioned. Chapter Comm 3 also requires the department to process regular petitions within 30 business days and priority petitions within 10 business days.

**Note:** The department forms required in this chapter are available from the Safety and Buildings Division at P.O. Box 7162, Madison, WI 53707, or at telephone (608) 266-1818. Some of the department forms are also available from the Division's Web site at www.commerce.wi.gov.

**(4)** EXCLUSIONS. (a) 1. The requirements in the following NFPA 1 sections are not included as part of this chapter: 1.7.10.2, 1.7.10.4, 1.9.1, 1.9.2, and 1.10.

2. Any permit referenced in NFPA 1 section 1.12 or referred to elsewhere under this chapter is not required by this chapter, but may be required at the local level if done so through a local ordinance.

3. Any certificate of fitness referenced in NFPA 1 section 1.13 or referred to elsewhere under this chapter is not required by this chapter, but may be required at the local level if done so through a local ordinance.

(b) Any requirement which is specified in par. (a) and which is subsequently referred to elsewhere under this chapter is not included as part of this chapter.

**(5)** FEES. This is a department rule in addition to the requirements in NFPA 1 chapter 1: Fees for petitions for variance and for inspection of buildings, structures, and premises shall be submitted as specified in ch. Comm 2.

**(6)** OWNER'S RESPONSIBILITY. This is a department rule in addition to the requirements in NFPA 1 chapter 1: The owner of each building, structure and premises shall be responsible for maintaining the property in compliance with this chapter. Compliance with this chapter does not relieve the owner of a public building or place of employment from compliance with the other administrative rules established by the department or other state agencies.

**Note:** Pursuant to s. 101.11 (2) (a), Stats., no employer or owner, or other person may hereafter construct or occupy or maintain any place of employment, or public building, that is not safe, nor prepare plans which fail to provide for making the same safe.

**Note:** See Appendix for statutory penalties relating to interfering with fire fighting, and to false alarms.

**(7)** APPEALS. These are department rules in addition to the requirements in NFPA 1 chapter 1:

(a) *Appeal of Department Order.* Pursuant to s. 101.02 (6) (e), Stats., any person who owns or occupies a property that is affected by an order of the department may petition the department on the reasonableness of the order.

(b) *Appeal of local order*. Pursuant to s. 101.02 (7) (b), Stats., any person affected by a local order that is in conflict with an order of the department may petition the department for a hearing.

**Note:** Section 101.01 (8), Stats., defines "local order" as any ordinance, order, rule or determination of any common council, board of alders, board of trustees or the village board, of any village or city, or the board of health of any municipality, or an order or direction of any official of such municipality, upon any matter over which the department has jurisdiction.

Section 101.02 (7) (c), Stats., reads: "Upon receipt of such petition the department shall order a hearing thereon, to consider and determine the issues raised by such appeal, such hearing to be held in the village, city or municipality where the local order appealed from was made. Notice of the time and place of such hearing shall be given to the petitioner and such other persons as the department may find directly interested in such decision, including the clerk of the municipality or town from which such appeal comes. If upon such investigation it shall be found that the local order appealed from is unreasonable and in conflict with the order of the department, the department may modify its order and shall substitute for the local order appealed from such order as shall be reasonable and legal in the premises, and thereafter the said local order shall, in such particulars, be void and of no effect."

**(8)** REVOCATION OF APPROVAL. These are department rules in addition to the requirements in NFPA 1 chapter 1:

(a) *Department revocation*. The department may revoke any approval, issued under the provisions of this chapter, for any false statements or misrepresentation of facts on which the approval was based.

(b) *Local revocation*. The fire chief, or in first class cities the commissioner of building inspection, may revoke any local approval issued by them under the provisions of this chapter, for any false statements or misrepresentation of facts on which the approval was based. The fire chief, and in first class cities the commissioner of building inspection, may not revoke an approval issued by the department.

**(9)** FIRE INCIDENT REPORTS. Substitute the following wording for the requirements in NFPA 1 section 1.11.3.2:

(a) Except as provided in par. (b), each fire chief shall submit written or electronic-based fire incident reports to the department no later than April 1, for the previous year. The reports shall contain the fire response information specified in NFPA 1 section 1.11.3.1.

(b) Electronic-based fire incident reports that are submitted directly to and in compliance with the National Fire Incident Reporting System are not required to be submitted to the department.

**(10)** PENALTIES. This is a department rule in addition to the requirements in NFPA 1 section 1.16: Penalties for violations of this chapter shall be assessed in accordance with s. 101.02 (12) and (13) (a), Stats.

**Note:** Section 101.02 (12), Stats., indicates that each day during which any person, persons, corporation or any officer, agent or employee thereof, fails to observe and comply with an order of the department will constitute a separate and distinct violation of such order.

Section 101.02 (13) (a), Stats., indicates penalties will be assessed against any employer, employee, owner or other person who fails or refuses to perform any duty lawfully enjoined, within the time prescribed by the department, for which no penalty has been specifically provided, or who fails, neglects or refuses to comply with any lawful order made by the department, or any judgment or decree made by any court in connection with ss. 101.01 to 101.25. For each such violation, failure or refusal, such employee, owner or other person must forfeit and pay into the state treasury a sum not less than $10 nor more than $100 for each violation.

**(11)** FIRE CHIEF AND FIRE DEPARTMENT DUTIES. These are department rules in addition to the requirements in NFPA 1 chapter 1:

(a) *Authorized deputy of the department*. The fire chief of the fire department in every city, village or town, except cities of the first class, is a duly authorized deputy of the department.

(b) *Fire prevention inspections*. 1. 'General.' The chief of the fire department shall be responsible for having all public buildings and places of employment within the territory of the fire department inspected for the purpose of ascertaining and causing to be corrected any conditions liable to cause fire, or any violations of any law or ordinance relating to fire hazards or to the prevention of fires.

2. 'Determining the buildings that are to be inspected.' The fire chief shall be responsible for determining those public buildings and places of employment that are to be inspected, for each municipality for which the fire department has responsibility.

3. ‘Scheduling of inspections.’ Except as provided in subds. 4. to 6., fire prevention inspections shall be conducted at least once in each non-overlapping 6-month period per calendar year, or more often if ordered by the fire chief, in all territory served by the fire department.

4. ‘Exception for first class cities.’ In first class cities, the fire chief may establish the schedule of fire inspections. The fire chief shall base the frequency of the inspections on hazard classification, the proportion of public area, the record of fire code violations, the ratio of occupancy to size and any other factor the chief deems significant. Property other than residential property with 4 dwelling units or less shall be inspected at least once annually.

5. ‘Exception for other municipalities.’ Within the territory of each fire department, in each municipality other than first class cities, the following types of occupancies shall be inspected at least once per calendar year, provided the interval between those inspections does not exceed 15 months:

a. Offices, outpatient clinics and dental clinics, if less than 3 stories in height.

b. Unoccupied utility facilities, such as a water well facility, electric power substation and communication facility.

c. Places of worship that do not have a rental hall, child day care facility or preschool to 12th grade instruction within the immediate church building.

d. Buildings at colleges and universities, if used exclusively for classroom lecture or offices, provided there are no laboratories, chemical storage or industrial arts rooms in the building.

e. Libraries, museums and art galleries.

f. Hotels and motels, if less than 3 stories in height.

g. Townhouses and rowhouses, if less than 3 stories in height.

h. Residential condominiums and apartments, if there are less than 5 units under one roof.

i. Convents and monasteries.

j. Detention and correctional facilities.

k. Garages used for storage only.

L. Pedestrian walkways and tunnels, membrane structures, open parking structures, outdoor theaters, assembly seating areas, greenhouses and mini-storage buildings. If interior access to mini-storage buildings cannot be obtained, an exterior inspection shall be conducted.

m. Vacant or unoccupied buildings. If interior access to vacant or unoccupied buildings cannot be obtained, an exterior inspection shall be conducted.

n. Confined spaces. An area that is identified by a sign as a permit-required confined space need not be internally inspected, but an exterior inspection shall be conducted.

o. Townhouses, rowhouses, residential condominiums and apartments with no common use areas. An exterior inspection of these occupancies shall be conducted.

p. Fully-sprinklered office buildings up to 60 feet in height.

q. Fully-sprinklered residential condominiums and apartments, if less than 3 stories in height.

r. Fully-sprinklered townhouses and rowhouses, if less than 4 stories in height.

**Note:** Fully-sprinklered buildings are protected throughout by an automatic fire sprinkler system as specified in NFPA 13 or 13R, as referenced in chs. Comm 60 to 66.

s. Seasonal or periodic occupancies, provided at least one interior inspection is conducted during an occupancy period.

6. 'Local ordinances for reducing the frequency of inspections.' a. Where authorized by a local ordinance, a city, village or town may reduce the inspections required under subd. 3. to at least once per calendar year, provided the interval between those inspections does not exceed 15 months.

b. Any local ordinance adopted under subd. 6. a. shall be made available to the department during an audit conducted under sub. (12) (d).

c. Any special order granted by the department prior to [the effective date of this section . . . Revisor inserts date] that authorized a city, village or town to reduce the number of required inspections shall remain in effect until the expiration date specified in that order.

7. 'Inspection reports.' Except in first class cities, the fire chief shall make and keep on file written reports of fire prevention inspections. In first class cities, the commissioner of the building inspection department shall make and keep the reports.

**Note:** The department has developed fire inspection report forms that may be used by fire departments. The fire inspection report forms (SBD-10615, SBD-5295 and SBD-10264) are available at no charge from the Safety and Buildings Division, P.O. Box 2509, Madison, WI 53701-2509, telephone (608) 266-1818.

8. 'Inspectors.' Fire safety inspections shall be conducted by the department or deputy or an authorized representative of the deputy.

**Note:** As referenced in s. Comm 14.66, see ch. Comm 10 for fire-prevention requirements for flammable, combustible or hazardous liquids that are not within the scope of this chapter. Some of the inspections for enforcing those requirements have corresponding credential requirements in ch. Comm 5.

9. 'Statutory inspection authority.' The rules of this chapter do not limit or deny the ability of department deputies to conduct the activities under s. 101.14 (1) (a) and (b), Stats., for

the purpose of ascertaining and causing to be corrected any condition liable to cause fire, or any violation of any law or order relating to fire hazards or to the prevention of fire.

**Note:** Under s. 101.14 (2) (a), Stats., and as referenced in s. Comm 14.01 (10) (a), "The chief of the fire department in every city, village or town, except cities of the 1st class, is constituted a deputy of the department."

**Note:** As referenced in s. Comm 14.66, see ch. Comm 10 for fire-prevention requirements for flammable, combustible or hazardous liquids that are not within the scope of this chapter. Some of the inspections for enforcing those requirements have corresponding credential requirements in ch. Comm 5.

10. 'Fire inspector training.' All fire department personnel directly involved in conducting fire inspections are authorized by the department and by the fire chief to conduct the inspections upon completion of required training approved by the department and by the fire chief.

(c) *Public fire education services*. Each fire department shall provide public fire education services within the territory served by the fire department. The services may be selected from the following public fire education-related activities, or may be other activities acceptable to the department:

1. 'Fire prevention week program.' Fire departments complete any combination of the following activities during national fire prevention week: children's poster contest; fire department open house; school visits to teach children fire safety; fire department fire safety demonstrations, including but not limited to fire fighting demonstrations, fire extinguisher and smoke detector demonstrations, stop, drop and roll demonstrations or an activity that specifically relates to a national fire prevention week theme.

2. 'Residential fire inspection program.' Fire departments advertise and conduct residential fire inspections on a request basis or in response to local ordinance.

3. 'Building plan review program.' Fire departments conduct plan reviews and approvals of fire safety related elements prior to construction of public buildings and places of employment.

4. 'School education program.' Fire departments conduct approved fire safety education programs in the school districts for which they have responsibility.

5. 'Continuing public fire education program.' Fire departments conduct public fire education programs, which may include monthly public service announcements for radio or television, monthly newspaper articles, booths at fairs, demonstrations at shopping centers, and billboards with fire safety messages.

6. 'Public fire education speaking bureau.' Fire departments organize a group of speakers to make public fire education presentations to civic organizations, professional organizations, school organizations and similar groups.

7. 'Youth fire awareness program.' Fire departments conduct youth fire awareness programs, including skill award and merit badge clinics for scouts, junior fire marshal program, juvenile fire setters program, first aid and CPR training and related activities.

8. ‘Fire extinguisher training program.’ Fire departments conduct training programs for the public or industry regarding the operation of fire extinguishers. Industrial fire brigade training programs may be conducted to complete this activity.

9. ‘Occupancy inspection program.’ Fire departments conduct inspections of public buildings and places of employment prior to the issuance of local occupancy permits. Written documentation of the inspections is kept by each fire department.

10. ‘Smoke detector awareness program.’ Fire departments conduct programs to inform people regarding the effectiveness and proper installation of smoke detectors in residential buildings, public buildings and places of employment.

(d) *Record keeping*. The following fire department dues entitlement records shall be generated and maintained by each fire department:

1. Current roster of active fire department members.

2. Time, date, location, and number of firefighters responding, excluding the chief, for each first alarm for a building. For any of these responses that are in combination with another fire department under a mutual aid agreement, the record under this paragraph shall include the name of that department and the number of firefighters, excluding the chief, responding from that department.

3. Number and duration of, and attendance at, fire department meetings, if the fire department is a volunteer fire department. For the purposes of this requirement, a volunteer fire department does not have any member who is paid for 36 hours or more of work, on a weekly basis.

4. Number and duration of, topic of and attendance at fire department training sessions.

5. Number, type, and duration of, and attendance of fire department members at, public fire education related activities.

(e) *Availability of records.* The records specified in par. (d) shall be made available to the department and to the public, upon request to the fire department.

**Note:** Section 19.32 (2), Stats., considers a record to be material containing written or electromagnetic information. The department will consider computer records to be equivalent to written reports.

**(12)** FIRE DEPARTMENT DUES. These are department rules in addition to the requirements in NFPA 1 chapter 1:

(a) *Eligibility*. 1. a. In order to be eligible to receive a fire department dues payment, a municipality shall be in substantial compliance with the requirements for fire protection and fire prevention services specified in ss. 101.14 and 101.575, Stats., and this chapter, throughout the entire municipality.

b. The training program required under s. 101.575 (3) (a) 3., Stats., shall be in accordance with ch. Comm 30 for public sector fire departments and in accordance with 29 CFR 1910.156 for private sector fire departments.

2. a. Except as provided in subd. 2. b., the fire protection and fire prevention services shall be provided by the fire department. A municipality not maintaining a fire department shall have the services provided through contract. A fire department may use mutual aid agreements as a means of providing fire protection services.

b. In first class cities, fire inspections may be provided by the neighborhood services department.

(b) *Compliance determination*. 1. 'General.' The department shall determine substantial compliance with the fire department dues entitlement program through the self-certification process specified in par. (c) and the audit process specified in par. (d).

2. 'Multiple fire departments.' Where a municipality is served by more than one fire department and any one of the fire departments is determined to be in noncompliance within that municipality, the entire municipality shall be determined to be in noncompliance.

3. 'Notice of noncompliance.' The department shall issue a notice of noncompliance to the municipality and the chief of the fire department that the department has determined to be in noncompliance. The determination shall be based on one or more of the following causes:

a. The municipality fails to return the self-certification form on time.

b. The municipality returns an incomplete self-certification form.

c. The municipality self-certifies noncompliance.

d. An audit results in failure.

(c) *Self-certification*. 1. A municipality shall annually complete and submit a fire department dues entitlement self-certification form for the previous calendar year. The certification shall be made on the form provided by the department and the form shall be returned to the department on or before April 1.

**Note:** The department annually sends form SBD-10318 to the municipality.

2. A municipality shall identify on the self-certification form the name of every fire department and the chief of the fire department that provided fire protection services and fire prevention services, to the municipality in the last calendar year. This identification shall be used to determine which fire departments are entitled to receive fire department dues from the municipality.

3. The chief of the fire department that provided the fire protection and fire prevention services and the clerk of the municipality shall sign the self-certification form and indicate whether or not the municipality is in substantial compliance with state regulations regarding the

fire department dues entitlement program. In first class cities, the commissioner of the building inspection department shall also sign the self-certification form.

(d) *Audit*. 1. In addition to the self-certification process, the department shall periodically conduct audits of fire department dues entitlement records to determine substantial compliance with the fire department dues entitlement program for the previous calendar year.

2. The department shall periodically examine fire department dues entitlement records, including the records required in sub. (11) (b) 7. and (d), and in NFPA 1 section 1.11.2, to verify that the required fire prevention and fire protection services were provided within the territory served by the fire department and, within first class cities, by the building inspection department.

**Note:** The information required in the entitlement records is as specified in ss. 101.14 and 101.575, Stats. Under those sections, the fire incident reports that are addressed in sub. (9) are not fire dues entitlement records.

3. The department shall write a report summarizing the results of each audit.

(e) *Appeals of audit determinations.* 1. 'General.' A department audit determination under this subsection may be appealed only in accordance with this paragraph or ch. 227, Stats.

2. 'Filing an appeal.' a. The appeal shall be filed in writing, with the department.

b. An appeal may be filed only by either a fire department that fails an audit conducted under par. (d), or by a municipality served by that fire department.

3. 'Timing of an appeal.' An appeal may only be filed after the department issues a written determination of failure, but no later than 30 business days after that issuance. If no appeal is received by the department within that time period, the initial determination of failure shall become effective.

4. 'Processing an appeal.' The department shall forward the appeal to the appeals board established under subd. 5.

5. 'Appeals board.' The department shall appoint an appeals board comprised of the following members: a volunteer fire chief, a paid fire chief, a fire inspector, a volunteer firefighter, a paid firefighter, a representative of the League of Wisconsin Municipalities, and a representative of the Wisconsin Towns Association.

6. 'Support staff and resources.' The department shall provide support staff and other resources needed for the functions of the appeals board.

7. 'New information.' New information submitted with an appeal may result in remanding the appeal back to a lower level.

8. 'Hearing.' If requested by the appellant, the board shall allow oral testimony in addition to the written material filed under subd. 2. a. Any oral testimony shall be presented either through a teleconference or at a hearing location determined by the department.

9. ‘Determinations of the board.’ a. Four members of the board shall constitute a quorum. For the purpose of conducting business, a majority vote of the entire board, excluding any vacant positions, is required.

b. Findings of the appeals board shall be forwarded to the secretary of the department no later than 30 business days after the department receives the appeal, unless a later deadline is agreed upon by both the appellant and the appeals board.

10. ‘Decision by the secretary.’ No later than 30 days after receipt of the findings of the appeals board, the secretary of the department shall consider the findings and, in writing, either uphold or overturn the department’s initial determination of failure.

11. ‘Completion of the appeal process.’ Any appeal filed under this paragraph shall progress through subd. 10. no later than August 1 in the year the appeal is filed, unless withdrawn by the appellant.

12. ‘Appeal of the secretary’s decision.’ A secretary decision under this paragraph may be appealed only through the contested-case provisions in ch. 227, Stats.

(f) *Fire department registration*. 1. A fire department that provides fire prevention and fire protection services to a municipality shall register with the department on the form provided by the department.

**Note:** Copies of form SBD-10638 are available at no charge from the Safety and Buildings Division, P.O. Box 2509, Madison, WI 53701-2509, telephone (608) 266-1818.

2. The fire chief of a registered fire department shall annually submit a completed fire department annual update form, provided by the department, to the department by July 1.

**Note:** The department annually sends form SBD-10114 to the fire department.

**Comm 14.03 Definitions.** These are department definitions in addition to the definitions in NFPA 1 chapter 3:

**(1)** (a) “Administrative expenses,” for the appropriation under s. 20.143 (3) (La), Stats., means expenditures for the direct costs and indirect costs of administering ss. 101.14, 101.141 and 101.573, Stats.

(b) In this subsection:

1. “Direct costs” means the cost of salaries, limited term employees, fringe benefits and supplies to administer ss. 101.14, 101.141 and 101.573, Stats.

2. “Indirect costs” means the cost, determined on a pro rata basis, of management and administrative services provided to administer ss. 101.14, 101.141 and 101.573, Stats.

3. "Supplies" means equipment, memberships, postage, printing, rent, subscriptions, telecommunications, travel, utilities and similar outfitting and services, directly related to administering ss. 101.14, 101.141 and 101.573, Stats.

**(2)** "Department" means the department of commerce.

**(3)** "Fire chief" means the chief or authorized representative of the fire department serving the unit of government having authority over the public building or place of employment. Fire chief also means the representative designated by the local unit of government to carry out the duties of this chapter.

**(4)** "Fire department" means a municipal fire department, public safety department, or public or private organization, such as a fire association, fire district, fire company or fire corporation, organized or created for the purpose of extinguishing fires and preventing fire hazards.

**(5)** "Multifamily dwelling" has the meaning as defined in s. 101.971 (2), Stats.

**Note:** Section 101.971 (2), Stats., reads as follows: "Multifamily dwelling" means an apartment building, rowhouse, town house, condominium or manufactured building, as defined in s. 101.71 (6), that does not exceed 60 feet in height or 6 stories and that consists of 3 or more attached dwelling units the initial construction of which is begun on or after January 1, 1993. "Multifamily dwelling" does not include a facility licensed under ch. 50, Stats.

**(6)** "Municipality" means a city, village or town.

**(7)** "NFPA 1" means the 2006 edition of NFPA 1, *Uniform Fire Code*™, as adopted and modified in this chapter.

**(8)** "One- and 2-family dwelling" has the meaning as defined for dwelling in s. 101.61 (1), Stats.

**Note:** Section 101.61 (1), Stats., reads as follows: "Dwelling" means any building that contains one or 2 dwelling units. "Dwelling unit" means a structure or that part of a structure which is used or intended to be used as a home, residence or sleeping place by one person or by 2 or more persons maintaining a common household, to the exclusion of all others.

**(9)** "Place of employment" has the meaning as defined in s. 101.01 (11), Stats.

**Note:** See Appendix for a reprint of s. 101.01 (11), Stats.

**(10)** "Public building" has the meaning as defined in s. 101.01 (12), Stats.

**Note:** See Appendix for a reprint of s. 101.01 (12), Stats.

**(11)** "Substantial compliance," for the purposes of s. 101.575 (4) (a) 1. and 2., Stats., means an ample amount of the required activity was performed through a concerted effort aimed at total compliance. A determination of substantial compliance is obtained through a common-sense approach to evaluating whether enough effort was made to comply with the applicable statute or code requirements. Substantial compliance is not a specific number or percent of

compliance. A determination of substantial compliance in any one year or regulatory standard does not mean that the same amount of compliance or effort in the following year or in another area of the code automatically equals substantial compliance.

**Note:** Under section 101.575 (4) (a) 1. of the statutes, the Department may not pay fire department dues to a city, village, town or fire department, unless the Department determines that the city, village, town or fire department is in substantial compliance with sections 101.575 (6) and 101.14 (2) of the statutes.

**Comm 14.10 General fire safety. (1)** NFPA 101®, LIFE SAFETY CODE®. This is a department informational note to be used under NFPA 1 section 10.1.2:

**Note:** As established in s. Comm 14.01 (2) (a) 2., the design and construction requirements that are included in NFPA 1, *Uniform Fire Code,* either directly, or indirectly through cross-references to other standards and codes such as NFPA 101, are not included as part of this chapter.

**(2)** OUTSIDE STORAGE. This is a department informational note to be used under NFPA 1 section 10.16:

**Note:** See Appendix for related explanatory material.

**Comm 14.11 Portable unvented heaters.** This is a department rule in addition to the requirements in NFPA 1 section 11.5: Portable, fuel-fired, unvented heating appliances are prohibited – except during construction or demolition of a building, provided adequate ventilation is supplied.

**Note:** See chs. Comm 60 to 66 for requirements for other heating appliances.

**Comm 14.13 Fire protection systems. (1)** INSPECTION, TESTING AND MAINTENANCE OF CROSS CONNECTION CONTROL DEVICES. This is a department rule in addition to the requirements in NFPA 1 section 13.3 to13.5: All cross connection control devices installed in water-based fire protection systems shall be inspected, tested and maintained in accordance with this chapter and ch. Comm 82.

**(2)** CREDENTIALS FOR TESTERS OF FIRE SPRINKLER SYSTEMS. This is a department informational note to be used under NFPA 1 section 13.3.3:

**Note:** Chapter Comm 5 contains credential requirements for testers of fire sprinkler systems. That chapter and this chapter do not preclude non-credentialed individuals from conducting the daily, weekly, monthly, quarterly or semiannual inspection and testing activities for automatic fire sprinkler systems required under NFPA 25 and NFPA 72.

**(3)** MAINTAINANCE OF SMOKE DETECTORS IN RESIDENTIAL BUILDINGS. This is a department informational note to be used under NFPA 1 section 13.7.4.6:

**Note:** Sections 101.145 (3) (b) and (c), Stats., address maintenance of smoke detectors in residential buildings and read as follows: Section 101.145 (3) (b) "The owner of a residential building shall maintain any such smoke detector that is located in a common area of that residential building."

(c) "The occupant of a unit in a residential building shall maintain any smoke detector in that unit, except that if an occupant who is not an owner, or a state, county, city, village or town officer, agent or employee charged under statute or municipal ordinance with powers or duties involving inspection of real or personal property, gives

written notice to the owner that a smoke detector in the unit is not functional the owner shall provide, within 5 days after receipt of that notice, any maintenance necessary to make that smoke detector functional."

**(4)** MANUAL WET SPRINKLER SYSTEMS. This is a department rule and informational note in addition to the requirements in NFPA 1 section 13.8: Inspection, testing and maintenance of manual wet sprinkler systems shall comply with all of the requirements of NFPA 25, for an automatic fire sprinkler system, except that the main drain test specified in NFPA 25 is not required.

**Note:** Wisconsin has unique design and construction requirements for these manual wet systems, as established in chs. Comm 60 to 66.

**Comm 14.16 Hose threads during construction.** These are department informational notes to be used under NFPA 1 section 16.4.3.3.2.6:

**Note:** Section 213.15, Stats., regulates fire hose threads and fittings and reads as follows: "All fire hose fittings, apparatus fittings, 1.5 and 2.5 inches in diameter purchased or procured by a fire department or fire company shall be of the national standard hose thread as adopted by the national fire protection association. No fire department shall utilize hose and equipment not in conformance with the requirement that all threads shall be national standard hose thread as adopted by the national fire protection association. Any person offering for sale nonstandard hose couplings, fittings or apparatus fittings may be fined not less than $100 nor more than $500."

**Note:** NFPA 1963 contains the specifications for national standard hose thread.

**Comm 14.27 Manufactured home and recreational vehicle sites.** The requirements in NFPA 1 chapter 27 are not included as part of this chapter.

**Note:** See ch. Comm 26 for requirements for manufactured home communities.

**Comm 14.30 Motor fuel dispensing facilities and repair garages.** These are department exceptions to the requirements in NFPA 1 chapter 30:

**(1)** Any of the requirements in NFPA 1 chapter 30 that are within the scope of ch. Comm 10 are not included as part of this chapter.

**(2)** Any of the requirements of NFPA 1 chapter 30 that are excluded by sub. 1. from applying to new facilities and structures are also excluded from applying to facilities and structures in existence on [the effective date of this section . . . Revisor inserts date].

**Comm 14.42 Refueling.** These are department exceptions to the requirements in NFPA 1 chapter 42:

**(1)** Any of the requirements in NFPA 1 chapter 42 that are within the scope of ch. Comm 10 are not included as part of this chapter.

**(2)** Any of the requirements of NFPA 1 chapter 42 that are excluded by sub. 1. from applying to new facilities and structures are also excluded from applying to facilities and structures in existence on [the effective date of this section . . . Revisor inserts date].

**Comm 14.43 Spraying, dipping and coating using flammable or combustible materials.** These are department exceptions to the requirements in NFPA 1 chapter 43:

**(1)** Any of the requirements in NFPA 1 chapter 43 that are within the scope of ch. Comm 10 are not included as part of this chapter.

**(2)** Any of the requirements in NFPA 1 chapter 43 that are excluded by sub. (1) from applying to new facilities and structures are also excluded from applying to facilities and structures in existence on [the effective date of this section . . . Revisor inserts date].

**Comm 14.65 Explosives, fireworks and model rocketry. (1)** ENFORCEMENT. This is a department informational note to be used under NFPA 495 section 1.6, as referenced in NFPA 1 section 65.9.1:

**Note:** Any inspections by fire inspectors do not substitute for the department's licensing and permitting of the facilities that are regulated under this section and ch. Comm 7.

**(2)** MIXING PLANT OPERATION. These are department rules in addition to the requirements in NFPA 495 section 5.2.8 as referenced in NFPA 1 section 65.9.1:

(a) *Personnel limitations.* Only persons essential to the mixing and packaging operations shall be allowed in the mixing and packaging area at any one time.

(b) *Production limitations.* No more than one day's production of blasting agent shall be permitted in the mixing and packaging area at any one time.

(c) *Labeling.* All cartridges, bags or other containers of blasting agents shall be labeled to indicate their contents. Ammonium nitrate bags shall not be re-used as containers for blasting agents unless they are clearly relabeled so that no mistake can be made regarding their contents.

**(3)** MAGAZINE INSPECTION. Substitute the following wording for the requirements in NFPA 495 section 8.7.2 as referenced in NFPA 1 section 65.9.1: All magazines containing explosive materials shall be opened and inspected at maximum intervals of 7 days to determine whether there has been unauthorized or attempted entry into the magazines or whether there has been unauthorized removal of the magazines or their contents.

**(4)** USE OF EXPLOSIVE MATERIALS. The requirements in NFPA 495 chapters 10 and 11 as referenced in NFPA 1 section 65.9.1 are not included as part of this chapter.

**Note:** See ch. Comm 7 for requirements relating to the use of explosive materials.

**Comm 14.66 Flammable and combustible liquids.** These are department exceptions to the requirements in NFPA 1 chapter 66:

**(1)** Any of the requirements in NFPA 1 chapter 66 that are within the scope of ch. Comm 10 are not included as part of this chapter.

**(2)** Any of the requirements of NFPA 1 chapter 66 that are excluded by sub. (1) from applying to new facilities and structures are also excluded from applying to facilities and structures in existence on [the effective date of this section . . . Revisor inserts date].

SECTION 12. Comm 14 Appendix is created to read:

**Chapter Comm 14**
**APPENDIX**

The material contained in this appendix is for clarification purposes only and is numbered to correspond to the number of the rule as the rule appears in the text of this chapter.

**A-14.01 (1)** STATUTORY DEFINITIONS OF TERMS USED IN THIS CHAPTER**.** (a) *Public buildings and places of employment.* Under s. 101.01 (11), Stats., "place of employment" includes every place, whether indoors or out or underground and the premises appurtenant thereto where either temporarily or permanently any industry, trade or business is carried on, or where any process or operation, directly or indirectly related to any industry, trade or business, is carried on, and where any person is, directly or indirectly, employed by another for direct or indirect gain or profit, but does not include any place where persons are employed in private domestic service which does not involve the use of mechanical power or in farming. "Farming" includes those activities specified in s. 102.04 (3), and also includes the transportation of farm products, supplies or equipment directly to the farm by the operator of said farm or employees for use thereon, if such activities are directly or indirectly for the purpose of producing commodities for market, or as an accessory to such production. When used with relation to building codes, "place of employment" does not include an adult family home, as defined in s. 50.01 (1), or, except for the purposes of s. 101.11, a previously constructed building used as a community-based residential facility, as defined in s. 50.01 (1g), which serves 20 or fewer residents who are not related to the operator or administrator.

Under s. 101.01 (12), Stats., "public building" means any structure, including exterior parts of such building, such as a porch, exterior platform or steps providing means of ingress or egress, used in whole or in part as a place of resort, assemblage, lodging, trade, traffic, occupancy, or use by the public or by 3 or more tenants. When used in relation to building codes, "public building" does not include a previously constructed building used as a community-based residential facility as defined in s. 50.01 (1g) which serves 20 or fewer residents who are not related to the operator or administrator or an adult family home, as defined in s. 50.01 (1).

(b) *Exclusions referenced in ss. 101.01 (11) and (12), Stats., and exemptions in s. 101.05, Stats.* Section 102.04 (3), Stats., as referenced in s. 101.01 (11), Stats., reads as follows: "As used in this chapter 'farming' means the operation of farm premises owned or rented by the operator. 'Farm premises' means areas used for operations herein set forth, but does not include other areas, greenhouses or other similar structures unless used principally for the production of food and farm plants. 'Farmer' means any person engaged in farming as defined. Operation of farm premises shall be deemed to be the planting and cultivating of the soil thereof; the raising and harvesting of agricultural, horticultural or arboricultural crops thereon; the raising, breeding, tending, training and management of livestock, bees, poultry, fur-bearing animals, wildlife or aquatic life, or their products, thereon; the processing, drying, packing, packaging, freezing,

grading, storing, delivering to storage, to market or to a carrier for transportation to market, distributing directly to consumers or marketing any of the above-named commodities, substantially all of which have been planted or produced thereon; the clearing of such premises and the salvaging of timber and management and use of wood lots thereon, but not including logging, lumbering or wood cutting operations unless conducted as an accessory to other farming operations; the managing, conserving, improving and maintaining of such premises or the tools, equipment and improvements thereon and the exchange of labor, services or the exchange of use of equipment with other farmers in pursuing such activities. The operation for not to exceed 30 days during any calendar year, by any person deriving the person's principal income from farming, of farm machinery in performing farming services for other farmers for a consideration other than exchange of labor shall be deemed farming. Operation of such premises shall be deemed to include also any other activities commonly considered to be farming whether conducted on or off such premises by the farm operator."

Under s. 50.01 (1), Stats., as referenced in s. 101.01 (12), Stats., "adult family home" means one of the following:

(a) A private residence to which all of the following apply:

1. Care and maintenance above the level of room and board but not including nursing care are provided in the private residence by the care provider whose primary domicile is this residence for 3 or 4 adults, or more adults if all of the adults are siblings, each of whom has a developmental disability, as defined in s. 51.01 (5), or, if the residence is licensed as a foster home, care and maintenance are provided to children, the combined total of adults and children so served being no more than 4, or more adults or children if all of the adults or all of the children are siblings, or, if the residence is licensed as a treatment foster home, care and maintenance are provided to children, the combined total of adults and children so served being no more than 4.

2. The private residence was licensed under s. 48.62 as a foster home or treatment foster home for the care of the adults specified in subd. 1. at least 12 months before any of the adults attained 18 years of age.

(b) A place where 3 or 4 adults who are not related to the operator reside and receive care, treatment or services that are above the level of room and board and that may include up to 7 hours per week of nursing care per resident. "Adult family home" does not include a place that is specified in sub. (1g) (a) to (d), (f) or (g).

Under s. 50.01 (1g), Stats., as referenced in s. 101.01 (12), Stats., "community-based residential facility" means a place where 5 or more adults who are not related to the operator or administrator and who do not require care above intermediate level nursing care reside and receive care, treatment or services that are above the level of room and board but that include no more than 3 hours of nursing care per week per resident. "Community-based residential facility" does not include any of the following:

(a) A convent or facility owned or operated by members of a religious order exclusively for the reception and care or treatment of members of that order.

(b) A facility or private home that provides care, treatment and services only for victims of domestic abuse, as defined in s. 46.95 (1) (a), and their children.

(c) A shelter facility as defined under s. 560.9808 (1) (d).

(d) A place that provides lodging for individuals and in which all of the following conditions are met:

1. Each lodged individual is able to exit the place under emergency conditions without the assistance of another individual.

2. No lodged individual receives from the owner, manager or operator of the place or the owner's, manager's or operator's agent or employee any of the following:

a. Personal care, supervision or treatment, or management, control or supervision of prescription medications.

b. Care or services other than board, information, referral, advocacy or job guidance; location and coordination of social services by an agency that is not affiliated with the owner, manager or operator, for which arrangements were made for an individual before he or she lodged in the place; or, in the case of an emergency, arrangement for the provision of health care or social services by an agency that is not affiliated with the owner, manager or operator.

(e) An adult family home.

(f) A residential care apartment complex.

(g) A residential facility in the village of Union Grove that was authorized to operate without a license under a final judgment entered by a court before January 1, 1982, and that continues to comply with the judgment notwithstanding the expiration of the judgment.

Section 101.05, Stats., reads as follows: "Exempt buildings and projects. (1) No building code adopted by the department under this chapter shall affect buildings located on research or laboratory farms of public universities or other state institutions and used primarily for housing livestock or other agricultural purposes.

"(2) A bed and breakfast establishment, as defined under s. 254.61 (1), is not subject to building codes adopted by the department under this subchapter.

"(3) No standard, rule, code or regulation of the department under this subchapter applies to construction undertaken by the state for the purpose of renovation of the state capitol building.

"(4) No standard, rule, order, code or regulation adopted, promulgated, enforced or administered by the department under this chapter applies to a rural school building if all of the following are satisfied:

"(a) The school building consists of one classroom.

"(b) The school building is used as a school that is operated by and for members of a bona fide religious denomination in accordance with the teachings and beliefs of the denomination.

"(c) The teachings and beliefs of the bona fide religious denomination that operates the school prohibit the use of certain products, devices or designs that are necessary to comply with a standard, rule, order, code or regulation adopted, promulgated, enforced or administered by the department under this chapter."

Under s. 254.16 (1) Stats., as referenced in s. 101.05, Stats., "bed and breakfast establishment" means any place of lodging that:

(a) Provides 8 or fewer rooms for rent to no more than a total of 20 tourists or transients;

(b) Provides no meals other than breakfast and provides the breakfast only to renters of the place;

(c) Is the owner's personal residence;

(d) Is occupied by the owner at the time of rental;

(e) Was originally built and occupied as a single-family residence, or, prior to use as a place of lodging, was converted to use and occupied as a single-family residence; and

(f) Has had completed, before May 11, 1990, any structural additions to the dimensions of the original structure, including by renovation, except that this limit does not apply to any of the following:

1. A structural addition, including a renovation, made to a structure after May 11, 1990, within the dimensions of the original structure.

2. A structural addition, made to a structure that was originally constructed at least 50 years before an initial or renewal application for a permit under s. 254.64 (1) (b) is made and for which no use other than as a bed and breakfast establishment is proposed. The structural addition under this subdivision shall comply with the rules under s. 101.63 (1) and (1m).

**A-14.01 (6)** INTERFERING WITH FIRE FIGHTING, AND FALSE ALARMS. Section 941.12, Stats., reads as follows: "Interfering with fire fighting. (1) Whoever intentionally interferes with the proper functioning of a fire alarm system or the lawful efforts of fire fighters to extinguish a fire is guilty of a Class E felony.

"(2) Whoever interferes with, tampers with or removes, without authorization, any fire extinguisher, fire hose or any other fire fighting equipment, is guilty of a Class A misdemeanor.

"(3) Whoever interferes with accessibility to a fire hydrant by piling or dumping material near it without first obtaining permission from the appropriate municipal authority is guilty of a Class C misdemeanor. Every day during which the interference continues constitutes a separate offense."

Section 941.13, Stats., reads as follows: "False alarms. Whoever intentionally gives a false alarm to any public officer or employee, whether by means of a fire alarm system or otherwise, is guilty of a Class A misdemeanor."

**A-14.10 (2)** OUTSIDE STORAGE SCHEMATIC.

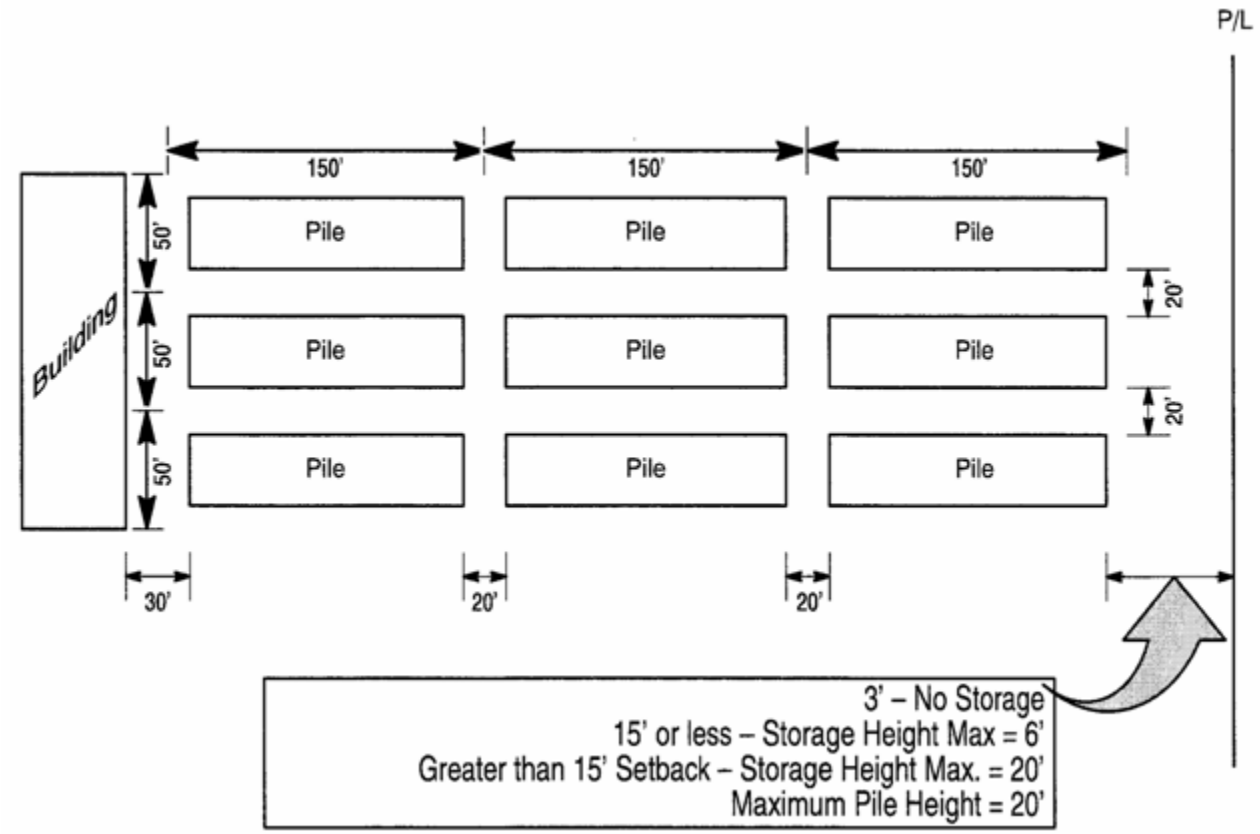


SECTION 13. Comm 16.08 (1) Note is amended to read:

**Comm 16.08 (1) Note:** The federal and state Fair Housing Acts, the federal Americans with Disabilities Act and the Wisconsin Commercial Building Code (chs. Comm ~~61~~ 60 to ~~65~~ 66) contain requirements relating to making buildings accessible to and usable by people with disabilities. Some of those requirements apply to the installation of various electrical devices. For example, in the federal fair housing accessibility guidelines, devices such as light switches, electrical outlets, thermostats and other environmental controls would meet the requirements if operable parts of the controls are located no higher than 48 inches, and no lower than 15 inches, above the floor. If the reach is over an obstruction between 20 and 25 inches in depth, the maximum height is reduced to 44 inches for forward approach; or 46 inches for side approach, provided the obstruction is no more than 24 inches in depth. Complete copies of the federal Fair Housing Accessibility Guidelines or the federal Americans with Disabilities Act Accessibility Guidelines can be obtained from the Superintendent of Documents, New Orders, P.O. Box 371954, Pittsburgh, PA 15250−7954.

SECTION 14. Comm 16.17 (1) (b) and (2) (a) Note are amended to read:

**Comm 16.17 (1)** (b) "Floors" means stories as specified in chs. Comm ~~61~~ 60 to ~~65~~ 66.

**(2)** (b) **Note:** See chs. Comm ~~61~~ 60 to ~~65~~ 66 for fire-resistance standards.

SECTION 15. Comm 16.45 (3) Note is amended to read:

**Comm 16.45 (3) Note:** See chs. Comm ~~61~~ 60 to ~~65~~ 66 for further requirements.

SECTION 16. Comm 16.48 (2) Note is amended to read:

**Comm 16.48 (2) Note:** See chs. Comm ~~61~~ 60 to ~~65~~ 66 for further requirements.

SECTION 17. Comm 18.1004 (5) and Note are amended to read:

**Comm 18.1004 (5)** "Building code" means chs. Comm ~~61~~ 60 to ~~65~~ 66, which is the Wisconsin Commercial Building Code.

**Note:** The Wisconsin Commercial Building Code, chs. Comm ~~61~~ 60 to ~~65~~ 66, adopts by reference the *International Building Code*® (IBC), the *International Energy Conservation Code*® (IECC), the *International Mechanical Code*® (IMC) and the *International Fuel Gas Code*® (IFGC). Comm 14, Fire Prevention Code, may have rules that may affect the maintenance and use of an existing building.

SECTION 18. Comm 61.03 is repealed and recreated to read:

**Comm 61.03 Application. (1)** STANDARDS. (a) The design and construction of public buildings and places of employment shall comply with s. Comm 61.05, except as provided in this code.

(b) The codes and standards referenced in this code and additional codes and standards subsequently referenced therein shall apply to the prescribed extent of each such reference, except as modified by this code.

(c) The requirements in IBC Appendix C may be applied to certain agricultural buildings, as specified in s. Comm 62.3600 (2), in lieu of corresponding, otherwise applicable requirements of this code.

**(2)** RETROACTIVITY. A rule of this code does not apply retroactively to public buildings and places of employment existing prior to the effective date of the rule unless specifically stated in the rule.

**(3)** CONFLICTS. (a) Where any rule of the department differs from a requirement within a document referenced in this code, the rule of the department shall apply.

(b) Where rules of the department specify conflicting requirements, types of materials or methods of construction, the most restrictive rule shall govern, except as provided in par. (c).

(c) Where there is a conflict between a rule that prescribes a general requirement and a rule that prescribes a specific or more detailed requirement, the specific or more detailed requirement shall govern, except as provided in par. (a).

**(4)** DEPARTMENT AUTHORITY. Pursuant to s. 101.02 (1), Stats., the department reserves the right to interpret the requirements in this code and in all adopted codes and standards.

**Note:** Section 101.02 (1), Stats., reads as follows: "The department shall adopt reasonable and proper rules and regulations relative to the exercise of its powers and authorities and proper rules to govern its proceedings and to regulate the mode and manner of all investigations and hearings."

**(5)** LOCAL ORDINANCES. (a) 1. Except as provided in par. (b), pursuant to s. 101.02 (7), Stats., a city, village, town or local board of health may enact and enforce additional or more restrictive standards for public buildings and places of employment, provided the standards do not conflict with this code.

2. Nothing in this code affects the authority of a municipality to enact and enforce standards relative to land use, zoning or regulations under ss. 59.69, 60.61, 60.62, 61.35 and 62.23 (7), Stats.

(b) 1. Pursuant to s. 101.02 (7m), Stats., a city, village, town or county may not enact and enforce additional or more restrictive standards for multifamily dwellings, except as provided under 101.975, Stats., and that do not conflict with this code.

2. Any municipality exercising or intending to exercise jurisdiction under this code may apply to the department for a variance permitting the municipality to adopt an ordinance pertaining to multifamily dwellings not in conformance with this code. The department shall review and make a determination on a municipal request under this section within 60 business days of receipt of the request.

3. a. The department may grant a municipal variance only where all of the conditions in subds. 3. b. and c. are demonstrated.

b. The municipality demonstrates that the variance is necessary to protect the health, safety, and welfare of individuals within the municipality because of specific climate or soil conditions generally existing within the municipality.

c. The municipality demonstrates that the granting of the variance, when viewed both individually and in conjunction with other variances requested by the municipality, does not impair the statewide uniformity of this code.

d. Prior to making a determination on a municipal variance, the department shall solicit within the municipality and consider the statements of any interested persons as to whether the variance should be granted.

e. This subdivision shall be strictly construed in accordance with the goal of promoting statewide uniformity.

4. Pursuant s. 101.121, Stats., a city, village, town or county may not enact or enforce additional or more restrictive standards regarding issues addressed under this code that would apply to alteration or change of occupancy for a historic building.

**(6)** ALTERNATIVES. Nothing in this code is intended to prohibit or discourage the design and utilization of new building products, systems, components, or alternate practices, provided written approval from the department is obtained first.

**Note:** Subchapter V contains requirements for approval of building products and alternate standards.

**(7)** NEW BUILDINGS AND STRUCTURES. Buildings, structures and additions to buildings, structures and components, to be constructed or erected shall be designed, constructed and maintained in accordance with the rules of this code as the rules exist on one of the following:

(a) Pursuant to s. Comm 61.30, the date plans for the building, structure or addition are approved by the department or authorized representative.

(b) The date the local building permit is issued, if plan submission and approval is not required under s. Comm 61.30.

(c) The date construction is initiated, where pars. (a) and (b) do not apply.

**(8)** ALTERATIONS. Those portions, elements, systems or components of existing buildings and structures to be altered or modified, where the alteration or the modification affects a building element or component relating to subject matters regulated by this code, shall be designed, constructed and maintained in accordance with the rules of this code as the rules exist on one of the following:

(a) Pursuant to s. Comm 61.30, the date plans for the alteration or modification are approved by the department or authorized representative.

(b) The date the local building permit is issued, if plan submission and approval is not required under s. Comm 61.30.

(c) The date the alteration is initiated, where pars. (a) and (b) do not apply.

**(9)** REPLACEMENTS. Those building systems or components of existing buildings and structures to be replaced, where the replacement involves a building element or component relating to subject matters regulated by this code shall conform and be maintained in accordance with the rules of this code as the rules exist on one of the following:

(a) Pursuant to s. Comm 61.30, the date plans for the replacement are approved by the department or authorized representative.

(b) The date the local building permit is issued, if plan submission and approval is not required under s. Comm 61.30.

(c) The date the replacement is initiated, where pars. (a) and (b) do not apply.

**(10)** REPAIRS. Those portions, elements, systems or components of existing buildings and structures repaired shall conform and be maintained in accordance with the rules of this code as the rules exist on one of the following:

(a) The date plans for that portion, element, system or component was approved by the department or authorized representative.

(b) The date the local building permit was issued for that portion, element, system or component, if plan submission and approval was not required.

(c) The date construction was initiated for that portion, element, system or component, where pars. (a) and (b) do not apply.

(d) The date repair is initiated.

**(11)** CHANGE OF OCCUPANCY OR USE. Except as provided in sub. (12), no change may be made in the use or occupancy of any building or structure, or any space within a building or structure, that would place the building, structure or space either in a different division of the same group of occupancies or in a different group of occupancies, unless the building, structure or space complies with this code's requirements for the new division or group of occupancies, as these requirements exist on one of the following dates:

(a) Pursuant to s. Comm 61.30, the date when plans for the change in occupancy or use are approved by the department or authorized representative.

(b) The date a local building permit is issued, if plan submittal and approval is not required under s. Comm 61.30.

(c) The date construction is initiated, where pars. (a) and (b) do not apply.

(d) The date an occupancy permit is issued, where pars. (a) to (c) do not apply.

**(12)** TEMPORARY USE. A municipal fire or building code official may permit a building or structure to be used temporarily by the public, subject to all of the following provisions:

(a) The official shall determine the time frame within which the temporary use is permitted, based on the extent hazards are created by the temporary use. This time frame may not exceed 180 days, except the official may grant extensions for demonstrated cause.

(b) Except as provided in par. (c), buildings or spaces considered for temporary use shall conform to the requirements of this code as necessary to ensure the public safety, health and general welfare.

(c) The official may require additional safety requirements for a temporary use as a tradeoff for any safety provisions that may be lacking.

(d) The official may terminate the approval for a temporary use at any time and order immediate discontinuance of the use or complete evacuation of the building or space.

**(13)** EXISTING BUILDINGS AND STRUCTURES. (a) Unless otherwise specifically stated in this code, an existing building or structure, and every element, system, or component of an existing building or structure shall be maintained to conform with the building code provisions that applied when the building, structure, element, system, or component was constructed, or altered except when required by subsequent editions of the building code.

(b) Existing bleachers, grandstands and folding and telescopic seating shall comply with ICC 300-02.

**(14)** INTERNATIONAL FIRE CODE. The IFC, as referenced by the codes adopted under s. Comm 61.05, does not apply except as follows:

(a) Design and construction-related requirements shall apply that are addressed in IFC section 102.6; IFC chapters 2 to 4; IFC sections 501 to 502 and 504 to 510; IFC sections 601 to 605 and 607 to 609; IFC chapters 7 and 8; IFC sections 901.1 to 901.4.2, 901.4.4 to 909.18.9, and 909.20 to 913; and IFC chapters 10, 12 to 21, 23 to 29, 31 to 33, 36, 37, and 39 to 44.

(b) Occupant loads addressed in IFC section 1003.2.2.10 shall apply but shall be established by the owner rather than by the code official.

(c) Construction-related inspections and reports shall apply that are addressed in IFC chapters 2 to 8; IFC sections 901 to 909.18.9 and 909.20 to 913; and IFC chapters 10, 12 to 21, 23 to 29, 31, 32, 33, 36, 37, and 39 to 44 but may be performed or compiled by any qualified agency, rather than by a special inspector.

(d) All requirements that specify submittal and approval of either construction documents or acceptance tests and records, are applicable only at a local level, where required by a local code official.

(e) All requirements that specify obtaining a permit, are applicable only at a local level, where required by a local ordinance.

(f) Use and operation provisions shall apply which are a contingency of design and construction-related requirements and which are addressed in IFC chapters 2 to 4; IFC sections 501 and 502 and 504 to 510; IFC sections 601 to 605 and 607 to 609; IFC chapters 7 and 8; IFC sections 901.1 to 901.4.2, 901.4.4 to 909.18.9, and 909.20 to 913; and IFC chapters 10, 12 to 21, 23 to 29, 31 to 33, 36, 37, and 39 to 44.

**Note:** The department and other state agencies may have additional rules that affect the design, construction, maintenance and use of public buildings and places of employment, including chs. Comm 5, Licenses, Certifications, and Registrations; Comm 7, Explosives and Fireworks; Comm 10, Flammable and Combustible Liquids; Comm 14, Fire Prevention; Comm 16, Electrical; Comm 18, Elevators, Escalators and Lift Devices; Comm 40, Gas Systems; Comm 41, Boilers and Pressure Vessels; Comm 43, Anhydrous Ammonia; Comm 45, Mechanical

Refrigeration; Comm 75 to 79, Buildings Constructed Prior to 1914; Comm 81 to 87, Plumbing; Comm 90, Public Swimming Pools; and Comm 91, Sanitation. The department's Safety and Buildings Division administers all of these listed codes except ch. Comm 10, which is administered by the department's Environmental and Regulatory Services Division.

SECTION 19. Comm 61.04 (4) to (6) are renumbered Comm 61.04 (14), (4) and (15) and Comm 61.04 (15), as renumbered, is amended to read:

**Comm 61.04 (15)** "This code" means chs. Comm ~~61~~ 60 to ~~65~~ 66, which is the Wisconsin Commercial Building Code.

SECTION 20. Comm 61.04 (7) is created to read:

**Comm 61.04 (7)** "IEBC and International Existing Building Code" mean the 2006 edition of the *International Existing Building Code*®, as adopted under s. Comm 61.05 and modified in this code.

SECTION 21. Comm 61.05 (1) to (4) are amended to read:

**Comm 61.05 (1)** IBC. The *International Building Code*® – ~~2000~~ 2006, subject to the modifications specified in this chapter and ch. Comm 62, is hereby incorporated by reference into this code.

**(2)** IECC. The *International Energy Conservation Code*® – ~~2000~~ 2006, subject to the modifications specified in this chapter and ch. Comm 63, is hereby incorporated by reference into this code.

**(3)** IMC. The *International Mechanical Code*® – ~~2000~~ 2006, subject to the modifications specified in this chapter and ch. Comm 64, is hereby incorporated by reference into this code.

**(4)** IFGC. The *International Fuel Gas Code*® – ~~2000~~ 2006, subject to the modifications specified in this chapter and ch. Comm 65, is hereby incorporated by reference into this code.

SECTION 22. Comm 61.05 (5) is repealed and recreated to read:

**Comm 61.05 (5)** IEBC. The *International Existing Building Code*® – 2006, subject to the modifications specified in this chapter and ch. Comm 66, is hereby incorporated by reference into this code.

**Note:** A copy of the *International Building Code*®, *International Energy Conservation Code*®, *International Mechanical Code*®, *International Fuel Gas Code*®, and *International Existing Building Code*® is on file in the offices of the department, the secretary of state, and the revisor of statutes. Copies of the International Codes may be purchased from the International Code Council®, 4051 West Flossmoor Road, Country Club Hills, IL 60478−5795, (708) 799−2300, Web site www.iccsafe.org.

SECTION 23. Comm 61.30 Table 61.30 - 1 is amended to read:

**Table 61.30-1**
**Buildings Exempt From Plan Review**

| Building Type or Occupancy | Building Description |
|---|---|
| Assembly Group A-2, A-3<br>Business Group B<br>Factory Group F<br>Mercantile Group M<br>Storage Group S<br>Utility and Miscellaneous Group U | Containing less than 25,000 cubic feet in volume |

SECTION 24. Comm 61.30 Table Comm 61.30 – 2 is amended to read:

**Table 61.30-2**
**Buildings Exempt From Plan Review if Registered**

| Building Type or Occupancy | Building Description |
|---|---|
| Assembly Group A-2, A-3<br>Business Group B<br>Factory Group F<br>Mercantile Group M<br>Storage Group S<br>Utility and Miscellaneous Group U | Containing 25,000 to less than 50,000 cubic feet in volume |
| Assembly Group A-1, ~~A-3,~~ A-4, A-5<br>Educational Group E<br>High Hazard Group H<br>Residential Group R | Containing less than 25,000 cubic feet in volume |

SECTION 25. Comm 61.30 (2) (d) is created to read:

**Comm 61.30 (2)** (d) Crematoriums.

SECTION 26. Comm 61.36 (2) is amended to read:

**Comm 61.36 (2)** EXTENSION OF PLAN APPROVAL. Upon request and payment of the fee specified in ch. Comm 2, the expiration dates in sub. (1) (b) to (f) ~~shall~~ may be extended ~~for one 1-year period~~ provided the request is submitted prior to expiration of the original approval.

**Note:** According to s. 66.0413, Stats., the local governmental body or building inspector may order the razing of buildings or portions thereof, where there has been a cessation of normal construction for more than 2 years.

SECTION 27. Comm 61.38 is repealed.

SECTION 28. Comm 61.41 (1) Note is created to read:

**Comm 61.41 (1) Note:** Under s. 101.14 (2) (b) and (c), Stats., fire department chiefs are responsible for periodically inspecting "every public building and place of employment to determine and cause to be eliminated any fire hazard or any violation of any law relating to fire hazards or to the prevention of fires." Under s. 101.14 (1) (a) and (b) and (2) (a), Stats., the department and any deputy, including deputies who are chiefs of fire departments, may require correction of "any violation of any law or order [such as the orders in chs. Comm 60 to 66] relating to the fire hazard or the prevention of fire." See ch. Comm 14 for further requirements relating to fire inspections and fire prevention.

SECTION 29. Comm 61.60 (2) (a) 2. to 4. are repealed.

SECTION 30. Comm 61.60 (2) (a) 5. to 7. are renumbered Comm 61.60 (2) (a) 2. to 4.

SECTION 31. Comm 62.0001 is repealed.

SECTION 32. Comm 62.0100 is amended to read:

**Comm 62.0100 Administration.** ~~Except for the requirements in IBC section 102.4, the~~ The requirements in IBC chapter 1 are not included as part of this code.

**Note:** The sections in this chapter are generally numbered to correspond with the section numbering in the IBC~~;~~, e.g., s. Comm 62.0202 corresponds to IBC section 202~~, and s. Comm 62.3408 corresponds to IBC section 3408~~.

**Note:** As used throughout this code, "not included as part of this code" is intended to convey that the referenced requirements are not incorporated herein, and therefore cannot be enforced through this code. However, local ordinances may include the referenced requirements, as specified in s. Comm 61.03.

**Note:** IBC section 101.2 addresses the scope of the IBC. For the scope of the Wisconsin Commercial Building Code, see s. Comm 61.02. Three or more attached townhouses, as referenced in an exception under IBC section 101.2, are included within the scope listed in s. Comm 61.02. Detached one- and two-family dwellings, as likewise referenced in an exception under IBC section 101.2, and elsewhere in the IBC, are not included within the scope listed in s. Comm 61.02, but are regulated in Wisconsin by chs. Comm 20 to 25, in accordance with subch. II of ch. 101, Stats.

SECTION 33. Comm 62.0202 (1) (c) is renumbered Comm 61.04 (5) and amended to read:

**Comm 61.04 (5)** "IBC" and "International Building Code" mean ~~the 2000 edition of~~ the *International Building Code*®, as adopted under s. Comm 61.05 and modified in this code.

SECTION 34. Comm 62.0202 (1) (d) and (e) to (j) are renumbered Comm 61.04 (6) and (8) to (13) and Comm 61.04 (8) to (11), as renumbered, are amended to read:

**Comm 61.04 (8)** "IECC" and "International Energy Conservation Code" mean ~~the 2000 edition of~~ the *International Energy Conservation Code*®, as adopted under s. Comm 61.05 and modified in this code.

**(9)** "IFC" and "International Fire Code" mean ~~the 2000 edition of~~ the *International Fire Code*®.

**(10)** "IFGC" and "International Fuel Gas Code" mean ~~the 2000 edition of~~ the *International Fuel Gas Code*®, as adopted under s. Comm 61.05 and modified in this code.

**(11)** "IMC" and "International Mechanical Code" mean ~~the 2000 edition of~~ the *International Mechanical Code*®, as adopted under s. Comm 61.05 and modified in this code.

SECTION 35. Comm 62.0202 (1) (c) is created to read:

**Comm 62.0202 (1)** (c) "Townhouse" means a single-family dwelling unit constructed in a group of three or more attached units in which each unit extends from foundation to roof and with open space on at least two sides.

SECTION 36. Comm 62.0302 is repealed.

SECTION 37. Comm 62.0303 (1) is repealed.

SECTION 38. Comm 62.0303 (2) is renumbered Comm 62.0303.

SECTION 39. Comm 62.0305 is repealed.

SECTION 40. Comm 62.0307 is created to read:

**Comm 62.0307 Pyrophoric materials.** This is a department informational note to be used under IBC section 307.4:

**Note:** See ch. Comm 14 for additional requirements for pyrophoric materials.

SECTION 41. Comm 62.0310 (1) is repealed.

SECTION 42. Comm 62.0310 (2) is renumbered Comm 62.0310

SECTION 43. Comm 62.0400 (1) is amended to read:

**Comm 62.0400 (1)** FIREWORKS, BLACK POWDER AND EXPLOSIVE MATERIALS. Fireworks, black powder and explosive materials shall be stored and isolated in accordance with ~~chs.~~ ch. Comm ~~7 and~~ 14.

SECTION 44. Comm 62.0400 (2) (b) and (c) are repealed.

SECTION 45. Comm 62.0400 (2) (a) is renumbered Comm 62.0400 (2).

SECTION 46. Comm 62.0400 (5) is created to read:

**Comm 62.0400 (5)** TOWNHOUSES. (a) Townhouses not more than 3 stories above grade plane in height with a separate means of egress shall be designed and constructed in accordance with either this code, or the *International Residential Code*® except as provided in par. (b).

(b) 1. An automatic fire sprinkler system or 2-hour fire resistance shall be provided throughout each townhouse when either of the following occurs:

a. The total gross floor area within all the individual dwelling units exceeds 16,000 square feet.

b. The number of dwelling units exceeds 20.

**Note:** The thresholds in this subdivision are established in s. 101.14 (4m) (b), Stats.

2. Two-hour fire resistance has the meaning as given in s. 101.14 (4m) (a) 5m., Stats.

**Note:** Section 101.14 (4m) (a) 5m. reads " 'Two-hour fire resistance' means 2-hour fire separations for all walls that separate dwelling units, exit corridors and exit stair enclosures and for all floors and ceilings, so that the specified walls, floors and ceilings are capable of resisting fire for a period not shorter than 2 hours."

3. The automatic fire sprinkler system for a townhouse shall be designed and installed in accordance with either IBC section 903.3.1.1 or IBC section 903.3.1.2.

4. Townhouses with 3 or more dwelling units that are not a multistory dwelling unit as defined under IBC section 1102.1 shall comply with the applicable portions of IBC section 1107.6.2.

SECTION 47. Comm 62.0403 is repealed.

SECTION 48. Comm 62.0404 is repealed.

SECTION 49. Comm 62.0406 (2) is repealed.

SECTION 50. Comm 62.0406 (1) is renumbered Comm 62.0406.

SECTION 51. Comm 62.0415 (2) is repealed and recreated to read:

**Comm 62.0415 (2)** This is a department rule in addition to the requirements in IBC section 415: A magazine for detonators in quantities of 100 or less shall have sides, bottoms and doors constructed of not less than number 12-gauge metal and lined with a nonsparking material. Hinges and hasps shall be attached so they cannot be removed from the outside. One steel padlock, which need not be protected by a steel hood, having at least 5 tumblers and a case-hardened shackle of at least 3/8 inch diameter shall be provided for locking purposes.

SECTION 52. Comm 62.0509 is repealed.

SECTION 53. Comm 62.0603 (1) is repealed.

SECTION 54. Comm 62.0603 (2) is renumbered 62.0603 and amended to read:

**Comm 62.0603 (title) ~~Combustible material in Type I and II construction~~ Allowable materials.** Substitute the following wording for application ~~19~~ 18 in IBC section 603.1: Sprayed cementitious and mineral fiber fire-resistance –rated materials.

SECTION 55. Comm 62.0706, 62.0711, 62.0712 and 62.0715 are repealed.

SECTION 56. Comm 62.0716 is created to read:

**Comm 62.0716 Ducts and air-transfer openings. (1)** PENETRATIONS OF SHAFT ENCLOSURES. This is an additional department exception to the requirements in IBC section 716.5.3: Smoke dampers are not required in ducts that are used in the exhaust portion of laboratory ventilating systems which are designed and installed in accordance with NFPA 45.

**(2)** SMOKE DAMPERS IN HEALTH CARE FACILITIES. This is an additional department exception to the requirements in IBC section 716.5.5: Smoke dampers are not required in Group I–2 duct penetrations of smoke barriers in fully ducted HVAC systems.

SECTION 57. Comm 62.0719 and 62.0720 are repealed.

SECTION 58. Comm 62.0903 (1m) is repealed.

SECTION 59. Comm 62.0903 (5) is repealed and recreated to read:

**Comm 62.0903 (5)** GROUP E. Substitute the following wording for the requirements in IBC section 903.2.2: (a) Except as provided in par. (b), an automatic sprinkler system shall be provided for Group E occupancies as follows:

1. Throughout all Group E fire areas greater than 20,000 square feet in area.

2. Throughout every story of educational buildings that is located below a story which includes the lowest level of exit discharge.

(b) An automatic sprinkler system is not required in any fire area, or in any story that is located below a story which includes the lowest level of exit discharge, where every classroom throughout the building has at least one exterior exit door at ground level.

SECTION 60. Comm 62.0903 (6) is repealed and recreated to read:

**Comm 62.0903 (6)** GROUP R. These are department rules in addition to the requirements in IBC section 903.2.7.

(a) *Definition*. In this subsection, "private student residential building" has the meaning as given under s. 101.14 (4) (b) 1m., Stats.

**Note:** Section 101.14 (4) (b) 1m., Stats., reads: "In this paragraph, "private student residential building" means a privately owned and operated residential building that has a capacity of at least 100 occupants, that is occupied by persons at least 80 percent of whom are enrolled in an institution of higher education, and that has attributes usually associated with a student residence hall or dormitory such as a food service plan or occupancy by a resident advisor."

(b) *Existing housing*. 1. Except as provided in subd. 2., an automatic fire sprinkler system shall be provided by January 1, 2006 throughout every residence hall and dormitory greater than 60 feet in height, the initial construction of which was begun before April 26, 2000, that is owned or operated by the board of regents of the University of Wisconsin System.

2. An automatic fire sprinkler system shall be provided by January 1, 2008 throughout Ogg Residence Hall at the University of Wisconsin-Madison.

3. An automatic fire sprinkler system shall be provided by January 1, 2014 throughout every residence hall and dormitory greater than 60 feet in height, the initial construction of which was begun before January 7, 2006, that is owned or operated by an institution of higher education, other than a residence hall or dormitory owned or operated by the board of regents of the University of Wisconsin System.

4. An automatic fire sprinkler system shall be provided by January 1, 2014 throughout every private student residential building greater than 60 feet in height, the initial construction of which was begun before January 7, 2006.

5. An automatic fire sprinkler system shall be provided by January 1, 2014 throughout every student residential facility operated by a fraternity, sorority or other organization authorized or sponsored by an institution of higher education, the initial construction of which was begun before January 7, 2006

(c) *New housing*. 1. An automatic fire sprinkler system shall be provided throughout every residence hall and dormitory, the initial construction which is begun on or after April 26, 2000, that is owned or operated by the board of regents of the University of Wisconsin System.

2. An automatic fire sprinkler system shall be provided throughout every residence hall and dormitory, the initial construction which is begun on or after January 7, 2006, that is owned or operated by an institution of higher education, other than a residence hall or dormitory owned or operated by the board of regents of the University of Wisconsin System.

3. An automatic fire sprinkler system shall be provided throughout every student residential facility, operated by a fraternity, sorority or an organization authorized or sponsored by an institution of higher education, the initial construction of which is begun on or after January 7, 2006.

4. An automatic fire sprinkler system shall be provided throughout every private student residential building, the initial construction of which is begun on or after January 7, 2006.

SECTION 61. Comm 62.0903 (8) to (10) is amended to read:

**Comm 62.0903 (8)** GROUP S–2. Substitute the following wording for the requirements, but not the exception, in IBC section ~~903.2.11~~ 903.2.9: An automatic sprinkler system shall be provided throughout buildings classified as enclosed parking garages in accordance with IBC section 406.4 where located beneath other groups.

**(9)** GROUP S–2 EXCEPTION. This is an additional department exception to the requirements in IBC section ~~903.2.11~~ 903.2.9: Enclosed parking garages for fire apparatus and fire department vehicles that are located beneath fire stations.

**(10)** COMMERCIAL PARKING GARAGE EXCEPTION. This is a department exception to the requirements in IBC section ~~903.2.11.1~~ 903.2.9.1: Enclosed parking garages for fire apparatus and fire department vehicles where within the fire stations.

SECTION 62. Comm 62.0903 (12) is repealed.

SECTION 63. Comm 62.0903 (11) is renumbered Comm 62.0903 (12).

SECTION 64. Comm 62.0903 (11) is created to read:

**Comm 62.0903 (11)** BUILDINGS OVER 60 FEET IN HEIGHT. This is a department rule in addition to the requirements in IBC section 903.2.10.3: (a) Except as provided in par. (b), pursuant to s. 101.14 (4) (b) 1., Stats., automatic fire sprinkler systems shall be installed throughout buildings and structures that are more than 60 feet in height.

(b) An automatic fire sprinkler system is not required to be provided in any of the following buildings or structures or portions of buildings or structures that are more than 60 feet in height:

1. Airport control towers.

2. Open parking structures complying with IBC section 406.3.

3. Telecommunications equipment spaces used exclusively for telecommunications equipment, associated electrical power distribution equipment and standby engines, provided that those spaces or areas are equipped throughout with an automatic fire detection system in accordance with IBC section 907.2 and are separated from the remainder of the building with fire barriers consisting of 1-hour fire-resistance-rated walls and 2-hour fire resistance-rated floor/ceiling assemblies.

4. Special industrial occupancies complying with the criteria outlined in IBC section 503.1.2.

5. Occupancies of Group F-2 when omission of the automatic fire sprinkler system is approved in accordance with s. Comm 61.22.

SECTION 65. Comm 62.0903 (13) is renumbered Comm 62.0903 (14).

SECTION 66. Comm 62.0903 (13) is created to read:

**Comm 62.0903 (13)** BALCONIES. Substitute the following wording for the requirements in IBC section 903.3.1.2.1: Sprinkler protection complying with NFPA 13 shall be provided for exterior balconies and ground-floor patios of dwelling units where the building is of Type V construction. Sidewall sprinklers that are used to protect such areas shall be permitted to be located such that their deflectors are within 1 inch to 6 inches below the structural members, and a maximum distance of 14 inches below the deck of the exterior balconies that are constructed of open wood joist construction.

SECTION 67. Comm 62.0907 (3) and (4) are renumbered Comm 62.0907 (5) and (6) and Comm 62.0907 (5) Note, as renumbered, is amended to read:

**Comm 62.0907 (5) Note:** Section 101.145 (4), Wisconsin Stats., addresses retroactivity requirements for buildings constructed prior to the effective date of this section. This statute section applies beyond the application of this code, as established in s. Comm 61.03 (2), and states "The owner of a residential building the initial construction of which is commenced before, on or after May 23, 1978, shall install and maintain a functional smoke detector in the basement and at the head of any stairway on each floor level of the building and shall install a functional smoke detector either in each sleeping room of each unit or elsewhere in the unit within 6 feet of each sleeping area and not in a kitchen."

SECTION 68. Comm 62.0907 (3), (4), and (7) are created to read:

**Comm 62.0907 (3)** GROUP I. Substitute the following wording for the requirements, but not the exception, in IBC section 907.2.6: A manual fire alarm system shall be installed in Group I occupancies. An electrically supervised, automatic smoke detection system shall be provided throughout the occupancy, except as provided in IBC sections 907.2.6.1 to 907.2.6.3.

**(4)** GROUP M. Substitute the following wording for the requirements, but not the exception, in IBC section 907.2.7: A manual fire alarm system shall be installed in Group M occupancies, other than covered mall buildings complying with IBC section 402, having an occupant load of 500 or more persons, or more than 100 persons above or below a story that includes the lowest level of exit discharge. The initiation of a signal from a manual fire alarm box shall initiate alarm notification appliances as required by IBC section 907.9.

**(7)** EMPLOYEE WORK AREAS. Substitute the following wording for the requirements in IBC section 907.9.1.2: Where employee work areas have audible alarm coverage, the alarm system shall be designed so that visible notification appliances can be integrated into the system.

SECTION 69. Comm 62.0909 (5) and (6) are renumbered Comm 62.0909 (6) and (7).

SECTION 70. Comm 62.0909 (5) is created to read:

**Comm 62.0909 (5)** REPORTS. Substitute the following wording for the requirements in IBC section 909.18.8.3: A complete report of testing shall be prepared. The report shall include identification of all devices by manufacturer, nameplate data, design values, measured values and identification tag or mark. The report shall be reviewed by the responsible registered design professional and, when satisfied that the design intent has been achieved, the responsible registered design professional shall seal, sign and date the report.

SECTION 71. Comm 62.0910 (title) is amended to read:

**Comm 62.0910** (title) **Smoke and heat vents, and ~~curtain boards~~ draft curtains.**

SECTION 72. Comm 62.0910 (1) is amended to read:

**Comm 62.0910 (1)** Exception. Substitute the following wording for the exception 1. in in IBC section 910.1: Buildings protected by an approved automatic sprinkler system.

SECTION 73. Comm 62.0910 (3) to (6) are repealed.

SECTION 74. Comm 62.1003 to 62.1009 are repealed.

SECTION 75. Comm 62.1004, 62.1008, 62.1009, 62.1015, 62.1017 and 62.1019 are created to read.

**Comm 62.1004 Egress for outdoor areas.** Substitute the following wording for the requirements, but not the exceptions, in IBC section 1004.8: Yards, patios, courts and similar outdoor areas accessible to and usable by the building occupants shall be provided with means of egress as required by this chapter. The occupant load of such outdoor areas shall be based on the anticipated use. Where outdoor areas are to be used by persons in addition to the occupants of the building, and the path of egress travel from the outdoor areas passes through the building, means of egress requirements for the building shall be based on the sum of the occupant load of the building plus the outdoor areas.

**Comm 62.1008 Doors, gates and turnstiles. (1)** CLEAR DOOR OPENINGS FOR NONACCESSIBLE STALLS. This is an additional department exception to the requirements in IBC section 1008.1.1: The clear door opening for a nonaccessible toilet stall, shower stall, or other similar compartment, may be less than 32-inches wide.

**(2)** DOOR ARRANGEMENT. This is an additional department exception to the requirements in IBC section 1008.1.7: Where ample maneuvering space is provided between the doors such that use by an individual in a wheelchair will not block the operation of the doors.

**Comm 62.1009 Solid risers not required.** Substitute the following wording for the exception 2. in IBC section 1009.3.3: Solid risers are not required in Group I-3, F, H and S occupancies, other than parking structures accessible to the public.

**Comm 62.1015 Refrigerated spaces.** Substitute the following wording for the exception in IBC section 1015.5: Where using refrigerants in quantities limited to the amounts based on the volume set forth in ch. Comm 45.

**Comm 62.1017 Corridor continuity.** This is an additional department exception to the requirements in IBC section 1017.5: Other spaces or rooms constructed as required for corridors, and that are adjacent to a fire-resistance-rated corridor, shall not be construed as intervening rooms; and may be open to the corridor when all of the following are satisfied:

**(1)** The spaces are not occupied for hazardous uses.

**(2)** The spaces are not occupied for the incidental uses listed in IBC Table 302.1.1.

**(3)** The spaces are arranged so as to not obstruct access to the required exits.

**Comm 62.1019 Guard tower exiting.** This is a department exception to the requirements in IBC section 1019.1: Buildings of Group I-3 occupancy that are used as guard towers, provided the towers are no higher than 2 stories above grade, accommodate no more than 10 occupants, and have a travel distance of no more than 75 feet.

SECTION 76. Comm 62.1100 to 62.1110 are repealed.

SECTION 77. Comm 62.1101, 62.1103, 62.1104, 62.1107 and 62.1110 are created to read:

**Comm 62.1101 Design.** These are department rules in addition to the requirements in IBC section 1101.2 and ICC/ANSI A117.1 sections 1003 and 1004:

**(1)** TYPE A AND TYPE B UNITS. (a) *Circuit breakers.* Circuit breakers, when provided for use by tenants in occupancies with dwelling and sleeping units, shall comply with ICC/ANSI A117.1 section 309.2 and 309.3.

(b) *Doors and doorways.* A renter of a dwelling unit may request the landlord to install lever door handles on any doors inside the dwelling unit or install single-lever controls on any plumbing fixtures used by the renter. These controls shall be provided and installed by the landlord at no additional cost to the renter.

**Note:** These requirements are based language from s. 101.132 (2) (a) 4., Stats.

**(2)** R-2 OCCUPANCY TOILET AND BATHING ROOMS. (a) When toilet and bathing rooms are provided in dwelling units and sleeping units within an R-2 occupancy the rooms shall conform to ICC/ANSI A117.1 section 1004.11.3.2 and with the requirements specified under par. (b).

(b) The minimum clear floor space provided at bathtubs and transfer showers shall be designed to facilitate a person using a wheelchair to reach and operate the bathtub or transfer shower controls without entering the bathtub or transfer shower.

**Comm 62.1103 Scoping Requirements. (1)** DETACHED BUILDINGS. The requirements in IBC section 1103.2.4 are not included as part of this code.

**(2)** LIMITED ACCESS SPACES. Substitute the following wording for the requirements in IBC section 1103.2.8: (a) Storage spaces that do not include permanent workstations, are infrequently accessed by employees, and are not open to the general public are not required to be accessible.

(b) Nonoccupiable spaces accessed only by ladders, catwalks, crawl spaces, freight elevators, very narrow passageways, or tunnels are not required to be accessible.

**Comm 62.1104 Accessible route.** Substitute the following wording for exception 4. under IBC section 1104.4: Where a two story building or facility, including a government-owned or operated building or facility, has one story with an occupant load of five or fewer persons that does not contain public use space, that story shall not be required to be connected to the story above or below.

**Comm 62.1107 General dwelling unit and sleeping unit exceptions. (1)** GROUP I. (a) *Group I-1*. Substitute the following wording for the requirements but not the exception in IBC section 1107.5.1.2: In structures with three or more dwelling or sleeping units intended to be occupied as a residence, every dwelling and sleeping unit intended to be occupied as a residence shall be a Type B unit.

(b) *Group I-2 nursing homes*. Substitute the following wording for the requirement but not the exception in IBC section 1107.5.2.2: In structures with three or more dwelling or sleeping units intended to be occupied as a residence, every dwelling and sleeping unit intended to be occupied as a residence shall be a Type B unit.

(c) *Group I-2 hospitals*. Substitute the following wording for the requirement but not the exception in IBC section 1107.5.3.2: In structures with three or more dwelling or sleeping units intended to be occupied as a residence, every dwelling and sleeping unit intended to be occupied as a residence shall be a Type B unit.

**(2)** GROUP R. (a) *Group R-1*. Substitute the following wording for the requirement but not the exception in IBC section 1107.6.1.2: In structures with three or more dwelling or sleeping units intended to be occupied as a residence, every dwelling and sleeping unit intended to be occupied as a residence shall be a Type B unit.

(b) *Group R-2*. 1. 'Apartment houses, monasteries and convents.' Substitute the following wording for the requirement but not the exception in IBC section 1107.6.2.1.2: Where there are three or more dwelling units or sleeping units intended to be occupied as a residence in a single structure, every dwelling unit and sleeping unit intended to be occupied as a residence shall be a Type B unit.

2. 'Boarding houses, dormitories, fraternity houses and sorority houses.' Substitute the following wording for the requirement but not the exception in IBC section 1107.6.2.2.2: Where there are three or more dwelling units or sleeping units intended to be occupied as a residence in a single structure, every dwelling unit and sleeping unit intended to be occupied as a residence shall be a Type B unit.

(c) *Group R-4*. Substitute the following wording for the requirement but not the exception in IBC section 1107.6.4.2: In structures with three or more dwelling or sleeping units intended to be occupied as a residence, every dwelling and sleeping unit intended to be occupied as a residence shall be a Type B unit.

**(3)** SITE IMPRACTICALITY. (a) *Petition for variance*. This is a department rule in addition to the requirements in IBC section 1107.7.4: In accordance with ss. 101.132 (2) (b) 4. and (c) 2., Stats., the owner may request a reduction in the number of Type A or Type B

dwelling units due to site impracticality through the petition for variance procedures specified in ch. Comm 61.

(b) *Condition.* Substitute the following wording for condition 1 under IBC section 1107.7.4: Not less than 50% of the units required by IBC section 1107.7.1 on the site are Type A or Type B units.

**Comm 62.1110 Signage. (1)** PUBLIC PARKING. (a) *General.* Substitute the following wording for the requirements for location 1 in IBC section 1110.1: Except as specified par. (b), accessible parking spaces required in IBC section 1106 for the general public shall be identified with a sign complying with the accessible parking sign requirements specified in s. Trans 200.07.

**(2)** DIRECTIONAL AND INFORMATIONAL SIGNS. This is a department informational note to be used under IBC section 1110.3.

**Note:** Refer to s. 101.123, Stats., for requirements for designating smoking areas.

(b) *Exceptions.* 1. *Small parking facilities.* Accessible parking spaces required by IBC section 1106.1 are not required to be signed when the total number of parking spaces provided is four or less.

2. *Employee and resident parking.* Accessible parking facilities identified for use only by employees of any building or facility or by tenants in Group R-2 occupancies may be identified with signs other than the s. Trans 200.07 signs.

SECTION 78. Comm 62.1203 is renumbered 62.1204 and amended to read:

**Comm 62.1204 Interior environment.** Substitute the following wording for the requirements and exception in IBC section ~~1203.1~~ 1204.1: Interior spaces intended for human occupancy shall conform to the IMC.

SECTION 79. Comm 62.1205 is renumbered 62.1206 and amended to read:

**Comm 62.1206 Court drainage.** Substitute the following wording and informational note for the requirements in IBC section ~~1205.3.3~~ 1206.3.3: The bottom of every court shall be properly graded and drained.

**Note:** See ch. Comm 82 for requirements for storm water piping.

SECTION 80. Comm 62.1209 is renumbered 62.1210 and Comm 62.1210 (intro), as renumbered, is amended to read:

**Comm 62.1210 Toilet rooms.** These are department rules in addition to the requirements in IBC section ~~1209.5~~ 1210.5:

SECTION 81. Comm 62.1403 is repealed.

SECTION 82. Comm 62.1405 (2) (c) 3. is amended to read:

**Comm 62.1405 (2)** (c) 3. Wind exposure category of ~~A,~~ B~~,~~ or C, as established in IBC section 1609.4; and the building is not sited on the upper half of an isolated hill or escarpment meeting conditions 1, 2, and 3 in IBC section ~~1609.6.1~~ 1609.1.1.1.

SECTION 83. Comm 62.1407 (title) and (2) are amended to read:

**Comm 62.1407 (title) ~~Aluminum~~ Metal composite materials.**

**(2)** FIRE-RESISTANCE RATING. Substitute the following wording for the requirements in IBC section 1407.8: Where ~~ACM~~ MCM systems are used on exterior walls required to have a fire-resistance rating in accordance with IBC section 704, evidence shall be made available to the code official upon request that the required fire-resistance rating is maintained.

SECTION 84. Comm 62.1407 (3) is repealed.

SECTION 85. Comm 62.1407 (4) is renumbered Comm 62.1407 (3) and amended to read:

**Comm 62.1407 (3)** LABELING. The requirements in IBC section ~~1407.12~~ 1407.13 are not included as part of this code.

SECTION 86. Comm 62.1505 is repealed and recreated to read:

**Comm 62.1505 Roof covering classification.** The requirements in Footnote a in IBC Table 1505.1. are not included as part of this code.

SECTION 87. Comm 62.1603 (1) to (4) are renumbered Comm 62.1603 (2) and (4) to (6).

SECTION 88. Comm 62.1603 (1) and (3) are created to read:

**Comm 62.1603 (1)** FLOOD DESIGN DATA. Item 5 under the exception in IBC section 1603.1 is not included as part of this code.

**(3)** FLOOD DESIGN. The requirements in IBC section 1603.1.6 are not included as part of this code.

SECTION 89. Comm 62.1607 (1) and Table 1607.1 are repealed and recreated to read:

**Comm 62.1607 (1)** RESIDENTIAL FLOOR LOADS. Substitute the following wording and live loads for the requirements in line 28 of IBC Table 1607.1:

**Table 1607.1**
**Minimum Uniformly Distributed Live Loads**
**and Minimum Concentrated Live Loads[g]**
(Partial Table)

| **Occupancy or Use** | **Uniform (psf)** | **Concentrated (lbs.)** |
|---|---|---|
| 28. Residential | | |
| Three or more attached dwelling units not more than 3 stories high, with separate means of egress for each unit | | |
| Uninhabitable attics without storage[i] | 5 | |
| Uninhabitable attics with storage[i, j, k] | 20 | — |
| All other areas except balconies | 40 | |
| Hotels and Group R-2 | | |
| Private rooms and corridors serving them | 40 | |
| Public rooms and corridors serving them | 100 | |

SECTION 90. Comm 62.1607 (4) and (5) are repealed.

SECTION 91. Comm 62.1608 (1) and (2) are repealed.

SECTION 92. Comm 62.1608 (3) and (4) are renumbered Comm 62.1608 (1) and (2) and Comm 62.1608 (1) (intro.) and 62.1608 (2) (intro.) and (a) 1., as renumbered, are amended to read:

**Comm 62.1608 (1)** UNBALANCED SNOW LOADS. This is a department alternative to the requirements in IBC section ~~1608.6~~ 1608.1: Unbalanced snow loads on a hip or gable roof may be calculated in accordance with the following equation:

**(2)** EXISTING ROOFS. These are department rules in addition to the requirements in IBC ~~sections 1608.7 and 1608.9~~ section 1608.1:

(a) *Buildings on the same property.* 1. Where an existing roof, regardless of the date of its construction, is horizontally within 15 feet of a proposed, taller structure on the same property, IBC ~~sections 1608.7 and 1608.9~~ section 1608.1 or an alternate recognized engineering method shall be applied to the existing roof, to address any drifting or sliding of snow onto the existing roof, as caused by the taller structure.

SECTION 93. Comm 62.1609 and 62.1610 are repealed.

SECTION 94. Comm 62.1613 is created to read:

**Comm 62.1613 Earthquake loads. (1)** Exception 1 in IBC section 1613.1 is not included as part of this code.

**(2)** The requirements in IBC section 1613.4 are not included as part of this code.

**(3)** This is a department informational note to be used under IBC section 1613.5:

**Note:** An interactive Web site maintained by the U. S. Geological Service, at http://eqint.cr.usgs.gov/eq-men/html/zipcode-06.html, can be used in lieu of IBC Figures 1613.5 (1) and (2) to determine the spectral response acceleration values for an inputted zip-code area.

SECTION 95. Comm 62.1614 to 62.1621 are repealed.

SECTION 96. Comm 62.1700 is amended to read:

**Comm 62.1700 Structural tests and special inspections.** The requirements in IBC chapter 17, except for the requirements in IBC ~~section~~ sections 1710 to 1715, are not included as part of this code.

SECTION 97. Comm 62.1802 (3) is amended to read:

**Comm 62.1802 (3)** QUESTIONABLE SOIL. Substitute the following wording for the requirements in IBC section 1802.2.1: Where the ~~safe-sustaining power~~ classification, strength or compressibility of the soil is in doubt, or where a load-bearing value superior to that specified in this code is claimed, an investigation complying with the provisions of IBC sections 1802.4 through 1802.6 shall be made.

SECTION 98. Comm 62.1803 is created to read:

**Comm 62.1803 Grading and fill in flood hazard areas**. The requirements in IBC section 1803.4 are not included as part of this code.

SECTION 99. Comm 62.1805 (2) is repealed and recreated to read:

**Comm 62.1805 (2)** SHALLOW POST FOUNDATIONS. This is a department alternative to the requirements in IBC section 1805.7.2: The design criteria in ANSI/ASAE EP 486.1 may be used in lieu of the design criteria in IBC section 1805.7.2.

SECTION 100. Comm 62.1807 is created to read:

**Comm 62.1807 Flood hazard areas**. The requirements in IBC section 1807.1.2.1 are not included as part of this code.

SECTION 101. Comm 62.1807 to 62.1809 are renumbered Comm 62.1808 to 62.1810 and Comm 62.1808 (1), (2), (3) (intro.), (4) (intro.), (5) (intro.) and (a), and (6), Comm 62.1809 and Comm 62.1810, as renumbered, are amended to read:

**Comm 62.1808 (1)** DEFINITION OF NEUTRAL PLANE. This is a department definition in addition to the definitions in IBC section ~~1807.1~~ 1808.1: NEUTRAL PLANE. A pile's neutral plane is the level at which drag load, accumulated from the top down, added to the long−term static service load, equals the upward acting shaft resistance accumulated from the bottom up, added to the pile's toe resistance.

**(2)** DOWNDRAG. This is a department rule in addition to the requirements in IBC section ~~1807.2.1~~ 1808.2.2: Investigations and reports for pier or pile foundations shall include analysis of whether downdrag is anticipated. Where downdrag is anticipated, the report shall include a determination of the position of the pile's neutral plane, an estimate of the soil settlement at the neutral plane, and a determination of the maximum load at the neutral plane.

**(3)** DETERMINATION OF ALLOWABLE LOADS. Substitute the following wording for the requirements in IBC section ~~1807.2.8.1~~ 1808.2.8.1:

**(4)** LOAD TESTS. This is a department alternative to the requirements in IBC section ~~1807.2.8.3~~ 1808.2.8.3: The ultimate capacity of the pile shall be defined as the load at which the average pile head deflection is defined by the following equation:

**(5)** PILES IN SUBSIDING AREAS. Substitute the following wording for the requirements in IBC section ~~1807.2.11~~ 1808.2.11:

(a) Where piles are ~~driven~~ installed through subsiding fills or other subsiding strata and derive support from underlying firmer materials, consideration shall be given to the downward drag load that may be imposed on the piles by the subsiding upper strata.

**(6)** SPECIAL INSPECTION. The requirements in IBC section ~~1807.2.22~~ 1808.2.22 are not included as part of this code.

**Comm 62.1809 Driven pile foundations .** Substitute the following wording for the requirements in IBC section ~~1808.1.3~~ 1809.1.3: Any substantial sudden ~~decrease in driving resistance of an end-supported~~ increase in rate of penetration of a timber pile shall be investigated ~~with regard to the possibility of~~ for possible damage. If the sudden ~~decrease in~~

~~driving resistance~~ increase in rate of penetration cannot be correlated to ~~load-bearing data~~ soil strata, the pile shall be removed for inspection or rejected, or shall be assigned a reduced capacity commensurate with the loss of end-bearing in lieu of removing or rejecting the pile.

**Comm 62.1810 Concrete pile foundations. (1)** DIMENSIONS FOR DRILLED OR AUGERED UNCASED PILES. Substitute the following wording for the exception in IBC section ~~1809.3.2~~ 1810.3.2: The length of the pile is permitted to exceed 30 times the diameter, provided that the design and installation of the pile foundation is under the direct supervision of a registered design professional knowledgeable in the field of soil mechanics and pile foundations.

**(2)** DIMENSIONS FOR DRIVEN UNCASED PILES. Substitute the following wording for the exception in IBC section ~~1809.4.2~~ 1810.4.2: The length of the pile is permitted to exceed 30 times the diameter, provided that the design and installation of the pile foundation is under the direct supervision of a registered design professional knowledgeable in the field of soil mechanics and pile foundations.

SECTION 102. Comm 62.1901 is repealed and recreated to read:

**Comm 62.1901 General requirements for concrete. (1)** CONSTRUCTION DOCUMENTS. The requirements in IBC section 1901.4 are not included as part of this code.

**(2)** SPECIAL INSPECTION. The requirements in IBC section 1901.5 are not included as part of this code.

SECTION 103. Comm 62.1903 is amended to read:

**Comm 62.1903 Specifications for concrete.** Substitute the following wording for the requirements in IBC section 1903.1: Materials used to produce concrete, concrete itself and testing thereof shall comply with the applicable standards listed in ACI 318~~ and IBC section 1903. Tests of concrete and the materials used in concrete shall be in accordance with ACI 318 section 3.8~~.

SECTION 104. Comm 62.1908 is created to read:

**Comm 62.1908 Deletions. (1)** Exception (a) in IBC section 1908.1.15 is not included as part of this code.

**(2)** The exception under (b) in IBC section 1908.1.15 is not included as part of this code.

**(3)** Exception 1 under (c) in IBC section 1908.1.15 is not included as part of this code.

SECTION 105. Comm 62.1910 is repealed.

SECTION 106. Comm 62.1914 is renumbered Comm 62.1913 and amended to read:

**Comm 62.1913 Shotcrete clearance.** The exception in IBC section ~~1914.4.2~~ 1913.4.2 is not included as part of this code.

SECTION 107. Comm 62.1916 is renumbered Comm 62.1915 and amended to read:

**Comm 62.1916 Column approvals.** Substitute the following wording for the requirements in IBC section ~~1916.6~~ 1615.6: Details of column connections and splices shall be shop-fabricated by approved methods and testing. Shop-fabricated concrete-filled pipe columns shall be inspected by a representative of the manufacturer at the plant.

SECTION 108. Comm 62.2101 (1) and (2) are renumbered Comm 62.2101 (2) and (3).

SECTION 109. Comm 62.2101 (1) is created to read:

**Comm 62.2101 (1)** PRESTRESSED MASONRY. Substitute the following wording for the requirements in IBC section 2101.2.3: Prestressed masonry shall be designed in accordance with chapters 1 and 4 of ACI 530/ASCE 5/TMS 402 and IBC section 2106.

SECTION 110. Comm 62.2103 (intro.) is amended to read:

**Comm 62.2103 Cast stone masonry units.** These are department rules in addition to the requirements in IBC section ~~2103.3~~ 2103.4:

SECTION 111. Comm 62.2108 is repealed.

SECTION 112. Comm 62.2204 is created to read:

**Comm 62.2204 Connections. (1)** WELDING. Substitute the following wording and informational note for the requirements in IBC section 2204.1: The details of design, workmanship and technique for welding, inspection of welding, and qualifications of welding operators shall conform to the requirements of the specifications listed in IBC sections 2205, 2206, 2207, 2209 and 2210.

**Note:** The rules pertaining to registration of structural welders are specified in ch. Comm 5.

**(2)** BOLTS. Substitute the following wording for the requirements in IBC section 2204.2: The design, installation and inspection of bolts shall be in accordance with the requirements of the specifications listed in IBC sections 2205, 2206, 2209 and 2210.

SECTION 113. Comm 62.2208 and 62.2209 are repealed.

SECTION 114. Comm 62.2303 (1) is repealed and recreated to read:

**Comm 62.2303 (1)** LABELING. Substitute the following for the requirements in IBC section 2303.2.1 item 1.: The identification mark of an approved agency.

SECTION 115. Comm 62.2303 (2) is amended to read:

**Comm 62.2303 (2)** TRUSS DESIGN DRAWINGS. The requirements in IBC section ~~2303.4.1~~ 2303.4.1.2 to 2303.4.1.4 are not included as part of this code.

SECTION 116. Comm 62.2303 (3) is created to read:

**Comm 62.2303 (3)** TRUSSES. Substitute the following wording for the requirements in IBC section 2303.4.2: In addition to IBC sections 2303.4.1 through 2303.4.1.7, the design, manufacture and quality assurance of metal-plate-connected wood trusses shall be in accordance with TPI 1.

SECTION 117. Comm 62.2304 is amended to read:

**Comm 62.2304 Girder ends.** This is a department rule in addition to the requirements in IBC section ~~2304.11.2.4~~ 2304.11.2.5: A moisture barrier shall be provided between an untreated or nondurable wood girder and an exterior masonry or concrete bearing surface.

SECTION 118. Comm 62.2306 and 62.2308 are repealed.

SECTION 119. The Note following Comm 62.2308 is repealed and recreated to read:

**Comm 62.2409 Glass and glazing for elevators.** This is a department informational note to be used under IBC section 2409:

**Note:** See ch. Comm 18 [ASME A17.1] for additional glass and glazing requirements relating to elevators. Those requirements include a prohibition against elevator hoistway windows that give a false appearance of a floor level.

SECTION 120. Comm 62.2406 to 62.2408 is repealed.

SECTION 121. Comm 62.2701 Note is amended to read:

**Comm 62.2701 Note:** As defined in s. Comm ~~62.0202 (1) (d)~~ 61.04 (6), "ICC Electrical Code" means ch. Comm 16.

SECTION 122. Comm 62.2900 (3) (c) (intro.) is amended to read:

**Comm 62.2900 (3)** (c) *Permanent outdoor toilets*. Permanent outdoor toilets, consisting of composting toilet systems, incinerating toilets, or privies shall comply with ch. Comm 91, s. Comm ~~62.1209~~ 62.1210, and this section.

SECTION 123. Comm 62.2901 Note is amended to read:

**Comm 62.2901 Note:** As defined in s. Comm ~~62.0202 (1) (h) and (i)~~ 61.04 (12) and (13), "IPC and International Plumbing Code" and "IPSC and International Private Sewage Code" mean chs. Comm 81 to 87.

SECTION 124. Comm 62.2902 (1) (c) 1. is amended to read:

**Comm 62.2902 (2)** (c) 1. Substitute the following wording for the water closets heading in IBC Table 2902.1: Water closets~~g~~ e (see s. Comm 62.2902 (1) (a) 1. for urinals).

SECTION 125. Comm 62.2902 (1) (c) 3. is repealed and recreated to read:

**Comm 62.2902 (1)** (c) 3. In IBC Table 2902.1, substitute the following wording for the required minimum number of water closets for females in type A-4 and A-5 occupancies: 1 per 37 for the first 1,500 and 1 per 60 for the remainder exceeding 1,500.

SECTION 126. Comm 62.2902 (1) (d) is amended to read:

**Comm 62.2902 (1)** (d) *Addition to IBC Table 2902.1.* This is an additional department footnote for IBC Table 2902.1: Footnote ~~g~~ e. Wherever more than 500 people congregate and more than the required minimum number of water closets or urinals are provided for males, twice as many of those additional toilet facilities shall be provided for females.

SECTION 127. Comm 62.2902 (3), (4) and (8) are repealed.

SECTION 128. Comm 62.2902 (5) to (7) and (9) are renumbered Comm 62.2902 (3) to (5) and (6) and Comm 62.2902 (4) (intro.), (5) and (6), as renumbered, are amended to read:

**Comm 62.2902 (4)** PUBLIC FACILITIES. This is a department alternative to the requirements in IBC section ~~2902.6~~ 2902.4: Toilet rooms may be omitted in a small retail or mercantile building where all of the following requirements are met:

**(5)** LOCATION OF RESTAURANT TOILET ROOMS. This is a department informational note to be used under IBC section ~~2902.6~~ 2902.4:

**Note:** Additional location requirements for restaurant toilet rooms may be applied by the department of health and family services.

**(6)** PAY FACILITIES. Substitute the following wording for the requirements in IBC section ~~2902.6.2~~ 2902.4.3: All toilet facilities shall be free of charge.

**Note:** Section 146.085, Stats., prohibits charging a fee for the use of toilet facilities and imposes a fine of $10 to $50 for violations.

SECTION 129. Comm 62.3001 (4) is repealed.

SECTION 130. Comm 62.3002 is repealed.

SECTION 131. Comm 62.3004 (2) (intro.) is amended to read:

**Comm 62.3004 (2)** PLUMBING AND MECHANICAL SYSTEMS. Substitute the following wording for the requirements and the exception in IBC section ~~3004.5~~ 3004.4:

SECTION 132. Comm 62.3100 (1) is repealed.

SECTION 133. Comm 62.3100 (2) is renumbered Comm 62.3100.

SECTION 134. Comm 62.3102 is amended to read:

**Comm 62.3102 Blower equipment.** Substitute the following wording for ~~exception~~ requirement 2 in IBC section 3102.8.1.2: Blowers shall be provided with inlet screens, belt guards and other protective devices as required to provide protection from injury.

SECTION 135. Comm 62.3104 (1) (title) and (2) are repealed.

SECTION 136. Comm 62.3104 (1) is renumbered Comm 62.3104.

SECTION 137. Comm 62.3400 is repealed and recreated to read:

**Comm 62.3400 Existing structures.** The requirements in IBC chapter 34 are not included as part of this code.

SECTION 138. Comm 62.3406 and 62.3408 are repealed.

SECTION 139. Comm 62.3500 (1) is amended to read:

**Comm 62.3500 (1)** INTRODUCTION. Substitute the following wording for the introductory paragraph in IBC chapter 35: This chapter lists the standards that are referenced in various sections of this document. The standards are listed herein by the promulgating agency of the standard, the standard identification, the effective date and title, and the section or sections of this document that reference the standard. The application of the referenced standards shall be as specified in ~~IBC section 102.4~~ s. Comm 61.03 (1) (b) and (3) (a).

SECTION 140. Comm 62.3500 (2) and (3) (a) are repealed.

SECTION 141. Comm 62.3500 (3) (b) to (e) are renumbered Comm 62.3500 (3) (a) to (d).

SECTION 142. Comm 62.3600 (1) is amended to read:

**Comm 62.3600 (1)** EXCLUSIONS. The provisions in IBC Appendices A, B, D and F to ~~J~~ K are not included as part of this code.

SECTION 143. Chapter Comm 63 is repealed and recreated to read:

## Chapter Comm 63
## Energy Conservation

### Subchapter I — Purpose and Application

**Comm 63.0001 Purpose.** This chapter regulates the design and construction of buildings for the effective use of energy. This chapter provides flexibility to permit the use of innovative approaches and techniques to achieve the effective use of energy. This chapter is not intended to abridge safety, health or environmental requirements contained in other applicable codes.

**Comm 63.0002 Application. (1)** MIXED OCCUPANCY. Where a building includes both residential and commercial occupancies, each occupancy shall be separately considered and meet the applicable provisions of IECC chapter 4 for residential or IECC chapter 5 for commercial.

**(2)** EXEMPT BUILDINGS AND STRUCTURES. The following buildings or portions of buildings separated from the remainder of the building by building thermal envelope assemblies complying with this chapter shall be exempt from the building thermal envelope provisions of this code:

(a) Those with a peak design rate of energy usage less than 3.4 Btu/h-ft$^2$ or 1.0 watt/ft$^2$ of floor area for space conditioning purposes.

(b) Those that do not contain conditioned space.

(c) Glazed structures or glazed portions of buildings used for the production of plant life or for maintaining plant life as the primary purpose.

## Subchapter II — Changes, Additions or Omissions to the International Energy Conservation Code (IECC)

**Comm 63.0100 Changes, additions or omissions to IECC.** Changes, additions or omissions to the IECC are specified in this subchapter and are rules of the department and are not requirements of the IECC.

**Note:** The sections in this chapter are generally numbered to correspond to the numbering used in the IECC, i.e., s. Comm 63.0101 refers to section IECC 101.

**Comm 63.0101 Administration and enforcement.** The requirements in IECC sections 101, 103 to 106 are not included as part of this chapter.

**Comm 63.0102 Materials, systems and equipment.** These are department rules in addition to the requirements in IECC section 102:

**(1)** PROHIBITION OF HEATED SIDEWALKS. The installation or use of heated sidewalks is prohibited as specified in s. 101.124, Stats.

**Note:** Section 101.124, Stats., reads as follows: "Heated Sidewalks Prohibited. In this section "exterior pedestrian traffic surface" means any sidewalk, ramp, stair, stoop, step, entrance way, plaza or pedestrian bridge not fully enclosed within a building and "heated" means heated by electricity or energy derived from the combustion of fossil fuels, but not including the use of waste thermal energy. "Exterior pedestrian traffic surface" does not include any means of ingress or egress by the physically disabled required under s. 101.13 (2). No person may construct a heated exterior pedestrian traffic surface. The department or any city, village, town or county is prohibited from approving any plan under s. 101.12 which includes such heated surface. The department shall order any existing heated exterior pedestrian traffic surface in operation to be shut off. This section does not apply to any inpatient health care facility as defined in s. 50.135 (1), or community–based residential facility, as defined in s. 50.01 (1g)."

**(2)** ASHRAE FUNDAMENTAL DATA. (a) *General.* Except as specified in par. (b), when available, information on thermal properties, performance of building envelope sections, and components and heat transfer shall be obtained from ASHRAE *Handbook of Fundamentals*.

(b) *Exceptions*. 1. When the information is not available from ASHRAE *Handbook of Fundamentals*, the data shall be obtained from laboratory or field-test measurements. If laboratory or field test measurements are used for envelope heat transmission, the measurements shall be obtained using one of the following test methods:

a. ASTM C177, Test method by guarded hot plate apparatus.

b. ASTM C335, Test method of horizontal pipe insulation.

c. ASTM C518, Test method by means of the heat flow meter apparatus.

d. ASTM C1363, Test method by means of a hot box apparatus.

2. For foam plastic insulation that incorporates a substance other than air as the insulating medium, laboratory or field tests shall be conducted on representative samples that have been aged for the equivalent of 5 years or until the R–Value has stabilized to determine thermal properties or performance. The tests shall be conducted by an independent third party.

3. Integrally insulated concrete masonry systems within the scope of the National Concrete Masonry Association (NCMA) shall be evaluated for the thermal performance of the masonry or concrete units in accordance with one of the following:

a. NCMA Evaluation Procedures for the Integrally-Insulated Concrete Masonry Walls.

b. Default values as approved by the department.

4. All other concrete or masonry units not within the scope of the NCMA Evaluation Procedures shall comply with one of the following methods for determining the thermal performance of the assembly or system:

a. Default values as approved by the department.

b. Laboratory or field-test measurements specified in subd. 1.

c. Department material approval process as specified in ch. Comm 61 to determine the U-factor.

**Comm 63.0202 General definitions.** Substitute the following definition for the corresponding definition listed in IECC section 202: "Approved" has the meaning given in s. Comm 62.0202 (2) (a).

**Comm 63.0302 Exterior design conditions.** These are department rules in addition to the requirements in IECC section 302: The exterior design temperatures used for heating and cooling load calculations shall be as specified under Table 63.0302.

**Table 63.0302**
**Exterior Design Conditions**

| County | Winter | Summer | |
|---|---|---|---|
| | Design Temp (°F) | Dry Bulb (°F) | Wet Bulb (°F) |
| Adams | –20 | 87 | 75 |
| Ashland | –25 | 86 | 70 |
| Barron | –25 | 86 | 75 |
| Bayfield | –25 | 86 | 70 |
| Brown | –15 | 87 | 75 |
| Buffalo | –20 | 87 | 75 |
| Burnett | –25 | 86 | 75 |
| Calumet | –15 | 87 | 75 |
| Chippewa | –25 | 86 | 75 |
| Clark | –20 | 87 | 75 |
| Columbia | –15 | 87 | 75 |
| Crawford | –15 | 87 | 75 |
| Dane | –15 | 87 | 75 |
| Dodge | –15 | 87 | 75 |
| Door | –15 | 87 | 75 |
| Douglas | –25 | 86 | 70 |
| Dunn | –25 | 86 | 75 |
| Eau Claire | –20 | 87 | 75 |
| Florence | –25 | 86 | 75 |
| Fond du Lac | –15 | 87 | 75 |
| Forest | –25 | 86 | 75 |
| Grant | –15 | 87 | 75 |
| Green | –15 | 87 | 75 |
| Green Lake | –15 | 87 | 75 |
| Iowa | –15 | 87 | 75 |
| Iron | –25 | 86 | 70 |
| Jackson | –20 | 87 | 75 |
| Jefferson | –10 | 89 | 77 |
| Juneau | –20 | 87 | 75 |
| Kenosha | –10 | 89 | 77 |
| Kewaunee | –15 | 87 | 75 |
| La Crosse | –20 | 87 | 75 |
| Lafayette | –15 | 87 | 75 |
| Langlade | –20 | 87 | 75 |
| Lincoln | –25 | 86 | 75 |
| Manitowoc | –15 | 87 | 75 |

| County | Winter | Summer | |
|---|---|---|---|
| | Design Temp (°F) | Dry Bulb (°F) | Wet Bulb (°F) |
| Marathon | –20 | 87 | 75 |
| Marinette | –20 | 87 | 75 |
| Marquette | –15 | 87 | 75 |
| Menominee | –20 | 87 | 75 |
| Milwaukee | –10 | 89 | 77 |
| Monroe | –20 | 87 | 75 |
| Oconto | –20 | 87 | 75 |
| Oneida | –25 | 86 | 75 |
| Outagamie | –15 | 87 | 75 |
| Ozaukee | –10 | 89 | 77 |
| Pepin | –20 | 87 | 75 |
| Pierce | –25 | 86 | 75 |
| Polk | –25 | 86 | 75 |
| Portage | –20 | 87 | 75 |
| Price | –25 | 86 | 75 |
| Racine | –10 | 89 | 77 |
| Richland | –15 | 87 | 75 |
| Rock | –10 | 89 | 77 |
| Rusk | –25 | 86 | 75 |
| St. Croix | –25 | 86 | 75 |
| Sauk | –15 | 87 | 75 |
| Sawyer | –25 | 86 | 75 |
| Shawano | –20 | 87 | 75 |
| Sheboygan | –15 | 87 | 75 |
| Taylor | –25 | 86 | 75 |
| Trempealeau | –20 | 87 | 75 |
| Vernon | –20 | 87 | 75 |
| Vilas | –25 | 86 | 75 |
| Walworth | –10 | 89 | 77 |
| Washburn | –25 | 86 | 75 |
| Washington | –10 | 89 | 77 |
| Waukesha | –10 | 89 | 77 |
| Waupaca | –20 | 87 | 75 |
| Waushara | –15 | 87 | 75 |
| Winnebago | –15 | 87 | 75 |
| Wood | –20 | 87 | 75 |

**Comm 63.0401 Certificate.** The requirements in IECC section 401.3 are not included as part of this code.

**Comm 63.0402 Building Thermal Envelope.** Substitute the following wording for the requirements and the exceptions in IECC section 402.5:

(a) *Moisture control.* Except as specified in par. (b), the building design may not create conditions of accelerated deterioration from moisture condensation. Above-grade frame walls, floors and ceilings shall be provided with an approved vapor retarder. The vapor retarder shall be installed on the warm-in-winter side of the thermal insulation.

(b) *Exception.* Where other approved means to avoid condensation in unventilated framed wall, floor, roof and ceiling cavities are provided.

**Comm 63.0403 Systems. (1)** ELECTRICAL POWER AND LIGHTING. This is a department rule in addition to the requirements in IECC section 403: In residential buildings having individual dwelling units, provisions shall be made to determine the electrical energy consumed by each tenant by separately metering individual dwelling units.

**(2)** INSULATION. Substitute the following wording for the requirements in IECC section 403.2.1: Supply and return ducts shall be insulated to a minimum of R-8, except ducts in floor trusses shall be insulated to a minimum of R-4.

**(3)** MECHANICAL VENTILATION. Substitute the following wording for the requirements in IECC section 403.5: Each mechanical ventilation system, either supply or exhaust or both, shall be equipped with a readily accessible switch or other means for shutoff, or volume reduction and shutoff, when ventilation is not required. Automatic or gravity dampers that close when the system is not operating shall be provided for all outdoor air exhausts. Motorized dampers that automatically close when the system is not operating shall be provided on all outdoor air intakes.

**Comm 63.0404 Calculation software tools.** This is a department informational note to be used under IECC section 404.6:

**Note:** The federal Department of Energy has developed RES*check*™, a computer program that may be used in demonstrating compliance for a residential building which has no more than 3 stories and has 3 or more dwelling units. The RES*check* program may be downloaded at http://www.energycodes.gov/. When using the program, the applicable code must be defined as the "2006 IECC." The use of the "Wisconsin" option will apply requirements associated with a 1 or 2 family dwelling, which are more restrictive than those associated with low-rise multifamily buildings.

**Comm 63.0501 General application.** This is a department rule in addition to the requirements in IECC section 501.2: All of the following rules shall apply regardless of whether the IECC chapter 5 or ASHRAE 90.1 standard is used to determine compliance:

**(1)** Section Comm 63.0503 (1) relating to design loads.

**(2)** Sections Comm 63.0503 (7) and (8) relating to economizers.

**(3)** Section Comm 63.0505 relating to lighting systems.

**(4)** IECC section 505.2.2.1 relating to dual switching.

**Comm 63.0502 Moisture control.** Substitute the following wording for the requirements and exceptions in IECC section 502.5:

**(1)** GENERAL. Except as specified in par. (b), the building design may not create conditions of accelerated deterioration from moisture condensation. Above-grade frame walls, floors and ceilings shall be provided with an approved vapor retarder. The vapor retarder shall be installed on the warm-in-winter side of the thermal insulation.

**(2)** OTHER APPROVED MEANS. Where other approved means to avoid condensation in unventilated framed wall, floor, roof and ceiling cavities are provided.

**Comm 63.0503 Building mechanical systems. (1)** CALCULATION OF HEATING AND COOLING LOADS. The following wording is a department requirement in addition to the requirements in IECC section 503.2.1: Design heating and cooling loads shall be determined in accordance with s. Comm 63.0302 and Table 63.0302.

**(2)** EQUIPMENT AND SYSTEM SIZING. Substitute the following wording for the requirements in IECC section 503.2.2: Heating and cooling equipment and systems shall be sized to provide the minimum space and system loads calculated in accordance with s. Comm 63.0302.

**(3)** TEMPERATURE CONTROLS. Substitute the following wording for the requirements in IECC section 503.2.4 but not the exceptions: Each heating and cooling system shall have at least one temperature control device that complies with IECC sections 503.2.4.1.1, 503.2.4.2 and 503.2.4.3.

**(4)** SHUTOFFF DAMPER CONTROLS. Substitute the following wording for the requirements and the exception in IECC section 503.2.4.4:

(a) Except as specified in par. (b), both outdoor air supply and exhaust ducts shall be equipped with motorized dampers that will automatically shut when the systems or spaces served are not in use.

(b) Individual supply systems with a design airflow rate of 3,000 cfm or less.

**(5)** DUCT AND PLENUM INSULATION AND SEALING. Substitute the following wording for the requirements, but not the exceptions or the subsequent paragraph, in IECC section 503.2.7: All supply ducts and return air ducts and plenums shall be insulated with a minimum of R-4 insulation when located in unconditioned spaces and with a minimum of R-8 insulation when located outside the building envelope. When located within a building envelope assembly, the duct or plenum shall be separated from the building exterior or unconditioned or exempt spaces by a minimum of R-8 insulation. All supply ducts located in plenums within the building envelope shall be insulated to R-4.

**(6)** HVAC SYSTEM COMPLETION. The requirements in IECC sections 503.2.9 to 803.2.9.3 are not included as part of this chapter.

**(7)** COOLING WITH OUTSIDE AIR. (a) *General.* Substitute the following wording for the requirements in IECC section 503.3.1 the first paragraph: Supply air economizers shall be provided on each cooling system as specified in Table 63.0503.

(b) *Economizer requirements.* Substitute the following wording for the requirements in IECC Table 503.3.1 (1):

**Table 63.0503**

| Climate Zones | Economizer Requirement |
|---|---|
| 6 and 7 | Economizers on all simple cooling systems ≥33,000 Btu/h, and on all complex cooling systems ≥54,000 Btu/h |

**(8)** COMPLEX HVAC SYSTEMS AND EQUIPMENT. Substitute the following wording for the requirements, but not the exceptions, in IECC section 503.4.1: Each cooling system shall have economizer controls complying with sub. (7). Economizers shall be capable of operating at 100 percent of outside air, even if additional mechanical cooling is required to meet the cooling load of the building.

**Comm 63.0504 Service water heating. (1)** TEMPERATURE CONTROLS. The requirements in IECC section 504.3 are not included as part of this chapter.

**(2)** HEAT TRAPS. The requirements in IECC section 504.4 are not included as part of this chapter.

**Comm 63.0505 Lighting systems.** These are department rules in addition to the requirements in IECC section 505:

**(1)** DAYLIT AREAS. Luminairies providing general lighting that are in or are partially in daylit areas described in pars. (a) or (b) shall be controlled according to the applicable requirements in sub. (3).

(a) *Determining daylit areas.* 1. Except as determined under par. (b), the horizontal daylit area under skylights shall be the rough opening of the skylight plus, in each of the lateral and longitudinal dimensions of the skylight, the lesser of 70% of the floor-to-ceiling height, the distance to the nearest 60-inch or high permanent partition, or one half the horizontal distance to the edge of the closest skylight or vertical glazing.

2. Except as determined under par. (b), the daylit area illuminated by vertical glazing shall be the daylit depth multiplied by the daylit width, where the daylit depth is 15 feet, or the distance on the floor, perpendicular to the glazing, to the nearest 60-inch or higher permanent partition, whichever is less; and the daylit width is the width of the window plus, on each side, either 2 feet, the distance to a permanent partition, or one half the distance to the closest skylight or vertical glazing, whichever, is least.

(b) *Alternative.* The daylit area shall be as calculated using a method acceptable to the department.

**(2)** CONTROLS. (a) *General.* Except as provided in par. (b), daylit areas in any interior enclosed space greater than 250 square feet and a lighting density more than 0.8 W/ft$^2$ shall have at least one control that meets all of the following requirements:

1. Controls only luminaires in the daylit areas.

2. Controls at least 50% of the lamps or luminaires in the daylit area, in a manner described in IECC section 505.2.2.1.

3. Controls luminaires in vertically daylit areas separately from horizontally daylit area.

(b) *Exceptions.* The requirements of this subsection do not apply to any of the following:

1. Daylit areas where the effective aperture of glazing is equal or less than 0.1 for vertical glazing and 0.01 for horizontal glazing.

2. Daylit areas where existing adjacent structures or natural objects obstruct daylight to the extent that effective use of daylighting is not feasible.

**Comm 63.0900 Referenced standards.** This is a department rule in addition to the requirements in IEEC chapter 6: The following standards are hereby incorporated by reference into this code:

**(1)** ASTM C 177-85, Test method for steady-state heat flux measurements and thermal transmission properties by means of the guarded-hot-plate apparatus.

**(2)** ASTM C 335-05, Test method for steady state heat transfer properties of horizontal pipe insulation.

**(3)** ASTM C518-04, Test Method for steady-state thermal transmission properties by means of the heat flow meter apparatus.

**(4)** ASTM C1363-05, Test method for thermal performance of materials and envelope assemblies by means of a hot box apparatus.

**(5)** National Concrete Masonry Association (NCMA) Evaluation Procedures of Integrally Insulated Concrete Masonry Walls, January 1, 1999.

**Note:** ASTM standards may be purchased from the American Society for Testing and Materials, 1916 Race Street, Philadelphia, PA 19103.
NCMA Evaluation Procedures may be obtained from the National Concrete Masonry Association, 2302 Horse Pen Road, Herndon, VA 20171-3499.
Copies of the standards adopted under this section are on file in the offices of the department, the secretary of state and the revisor of statutes.

SECTION 144. Chapter Comm 64 Subchapter I (title) is repealed and recreated to read:

**Subchapter I - Scope**

SECTION 145. Comm 64.0001 is repealed and recreated to read:

**Comm 64.0001 Scope.** This chapter shall regulate the design, installation, maintenance, alteration and inspection of mechanical systems that provide control of environmental conditions and related processes within buildings. This chapter shall also regulate those mechanical systems, system components, equipment and appliances specifically addressed herein. The use of fuel gas distribution piping and equipment, fuel gas-fired appliances and fuel gas-fired appliance venting systems shall be regulated by ch. Comm 65.

SECTION 146. Comm 64.0002 to 64.0004 are repealed.

SECTION 147. Comm 64.0101 is repealed and recreated to read:

**Comm 64.0101 Administration.** Except for IMC section 102.8, the requirements in IMC chapter 1 are not included as part of this chapter.

SECTION 148. Comm 64.0102 (1) and 64.0103 are repealed.

SECTION 149. Comm 64.0202 (1) (d) is repealed.

SECTION 150. Comm 64.0202 (2) (b) is repealed.

SECTION 151. Comm 64.0202 (2) (a) is renumbered 64.0202 (2) and is amended to read:

**Comm 64.0202 (2)** "Approved" ~~means acceptable to the department~~ has the meaning given in s. Comm 62.0202 (2) (a).

SECTION 152. Comm 64.0301 (3) (b) is amended to read:

**Comm 64.0301 (3)** (b) (title) *Unlisted ~~equipment~~ appliances*. The department may approve an installation of an unlisted ~~equipment~~ appliance after receipt of all of the following:

1. A statement from the ~~equipment~~ appliance manufacturer indicating the national standard with which the ~~equipment~~ appliance complies.

2. The results of a test conducted by a Wisconsin registered engineer on the output and safety controls in accordance with the national standard used by the manufacturer.

SECTION 153. Comm 64.0301 (4) and (5) are repealed.

SECTION 154. Comm 64.0304 Note is amended to read:

**Comm 64.0304 Note:** See s. Comm 61.03 ~~(2)~~ (3) for clarification on the application of different requirements and where the most restrictive requirements apply.

SECTION 155. Comm 64.0306 is amended to read:

**Comm 64.0306 Access and service space.** This is a department exception to the requirement in IMC section ~~306.6~~ 306.5.1: These provisions do not apply when the installation consists of fans only.

SECTION 156. Comm 64.0309 is repealed and recreated to read:

**Comm 64.0309 Temperature control.** Substitute the following exceptions for the exception in IMC section 309.1:

**(1)** ALTERNATE MINIMUMS. For those interior spaces intended for human occupancy listed in Table 64.0309, the heating system shall be capable of maintaining an inside temperature of not less than that shown in the table at 3 feet above the floor.

**Table 64.0309**
**Alternate Minimum Inside Temperature**

| Occupancy Types | Minimum Inside Temperature (degrees F) |
|---|---|
| Dry cleaners, laundries, laundry rooms | 60 |
| Educational training shops | 60 |
| Commercial kitchens | 60 |
| Health care facilities, hospitals, nursing homes, ambulatory surgery centers | Footnote a |
| Factories and machine shops | 60 |
| Foundries | NMR |
| Sawmills | NMR |
| Garages at private dwellings | NMR |
| Automotive service and repair garages | 60 |
| Car washes, enclosed: | |
| Self-serve | NMR |
| All other types | 60 |
| Ice skating rinks (indoor) | NMR |
| Natatoriums | 76 |
| Roller skating rinks (indoors) | 60 |
| Storage | NMR |
| Elevator cars | NMR |
| Janitor closets | NMR |
| Locker and dressing rooms | 70 |
| Shower rooms | 70 |
| Food processing | NMR |
| Printing | 60 |

NMR = No minimum requirement

a For inside temperature requirements in health care facilities, use American Institute of Architects (AIA) Guidelines for Design and Construction of Hospital and Health Care Facilities.

**(2)** SEASONAL OCCUPANCIES. The heating requirements but not the ventilation requirements may be waived during the period of May 1 through October 15 for the following or

similar occupancies: drive-in eating places, club houses, outdoor toilets, camp lodge buildings, canning factories and migrant labor camps.

SECTION 157. Comm 64.0313 (3) is repealed and recreated to read:

**Comm 64.0313 (3)** BALANCING, OPERATING AND MAINTENANCE MANUALS. (a) The designer or installer shall provide the owner with written instructions for the operation and maintenance of the HVAC systems and equipment. An operating and maintenance manual shall be provided to the building owner or operator. The manual shall include basic data relating to the operation and maintenance of heating, ventilating and air conditioning (HVAC) systems and equipment.

(b) Required routine maintenance actions shall be clearly identified. Where applicable, HVAC controls information such as diagrams, schematics, control sequence descriptions, and maintenance and calibration information shall be included.

SECTION 158. Comm 64.0401 (3) is repealed.

SECTION 159. Comm 64.0401 (4) (a) (intro.) is amended to read:

**Comm 64.0401 (4)** INTAKE OPENINGS. (a) (intro.) ~~Substitute the following wording for~~ <u>These are department rules in addition to</u> the requirements in IMC section ~~401.5.1~~ <u>401.4.1</u>:

SECTION 160. Comm 64.0401 (4) (a) 1. and 3. are repealed.

SECTION 161. Comm 64.0401 (4) (a) 2. and 4. are renumbered Comm 64.0401 (4) (a) 1. and 2.

SECTION 162. Comm 64.0401 (4) (b) (intro.) and 1. are amended to read:

**Comm 64.0401 (4)** (a) (intro.) These are department exceptions in addition to the requirements in IMC section ~~401.5.1~~ <u>401.4.1 and par. (a)</u>:

1. The setback distances as specified in IMC section ~~401.5.1~~ <u>401.4.1 and par. (a)</u> shall not apply to the combustion air intake of a direct vent appliance.

SECTION 163. Comm 64.0401 (4) (b) 3. and 4. are repealed.

SECTION 164. Comm 64.0401 (4) (b) 5. is renumbered Comm 64.0401 (4) (b) 3. and amended to read:

**Comm 64.0401 (4)** (b) 3. Where it can be demonstrated that an engineered system design will prevent the maximum concentration of contaminants brought in through the outside air intake from exceeding the maximum contaminant concentration obtainable by providing the separation distances in accordance with ~~sub. (4) (a)~~ IMC section 401.4.1 and par. (a), the outdoor air intakes may be located in accordance with such engineered system design.

SECTION 165. Comm 64.0401 (5) (intro.) is amended to read:

**Comm 64.0401 (5)** EXHAUST OPENINGS. (intro.) These are department rules in addition to the requirements in IMC section ~~401.5.1~~ 401.4.1:

SECTION 166. Comm 64.0401 (6) is created to read:

**Comm 64.0401 (6)** CONTAMINANT SOURCES. Substitute the following wording for the requirements in IMC section 401.6: Stationary local sources producing air-borne particulates, heat, odors, fumes, spray, vapors, smoke or gases in such quantities as to be injurious to health shall be provided with an exhaust system in accordance with IMC chapter 5 or a means of collection and removal of the contaminants. Such exhaust shall discharge directly to an approved location at the exterior of the building.

SECTION 167. Comm 64.0403 (1) is repealed.

SECTION 168. Comm 64.0403 (3) is amended to read:

**Comm 64.0403 (3)** RECIRCULATION PROHIBITED. Substitute the following wording for exception 3 in IMC section 403.2.1: Where ~~mechanical exhaust is required by~~ indicated in Table 64.0403, recirculation of air from such spaces is prohibited. All air supplied to such spaces shall be exhausted, including any air in excess of that required by Table 64.0403.

SECTION 169. Comm 64.0403 Table 64.0403 is repealed and recreated to read:

**Table 64.0403**
**Required Outdoor Ventilation Air**

| **Occupancy Classification** [i] | **Ventilation Requirements - Basis of Capacity** | | | |
|---|---|---|---|---|
| | **Estimated Maximum Occupant Load (persons per 1,000 sq. ft.)** [a] | **Natural Ventilation Allowed** [p] | **Exhaust** [e] **(cfm/net sq. ft. floor area)** | **Air Change Rate** [k] **(minimum air change per hour with A/C)** |
| Correctional facilities | | | | |
| Sleeping rooms [j] | 20 | yes | NR | NR |

| | | | | |
|---|---|---|---|---|
| Dining halls | 100 | no | NR | 2.0 |
| Guard stations | 40 | yes | NR | NR |
| | | | | |
| Dry cleaners, laundries | | | | |
| Coin-operated dry cleaners | 8 | yes | NR | 1.0 |
| Coin-operated laundries | 8 | yes | NR | 1.0 |
| Commercial dry cleaners | NA | no | 2.0 | NR |
| Commercial laundries | NA | no | 2.0 | NR |
| Storage, pick up | 8 | yes | NR | 1.0 |
| Apartment laundry rooms | NA | no | 0.5 | NR |
| | | | | |
| Education | | | | |
| Auditoriums | 150 | no | NR | 2.0 |
| Classrooms | 50 | no | NR | 2.0 |
| Day care facilities | 30 | yes only if ≤ 20 children | NR | 2.0 |
| Laboratories (science) | 30 | no | NR | 2.0 |
| Corridors with lockers | NA | NA | NR | 10 cfm/lineal ft. of length |
| Music rooms | 50 | no | NR | 2.0 |
| Smoking lounges [b, g] | NA | no | 2.0 | NR |
| Special education | 35 | no | NR | 2.0 |
| Training shops | 30 | no | NR | NR |
| | | | | |
| Food and beverage service | | | | |
| Bars and cocktail lounges | 100 | no | NR | 2.0 |
| Cafeterias, fast food | 100 | no | NR | 2.0 |
| Dining rooms | 70 | no | NR | 2.0 |
| Kitchens (cooking) [f, g] | 20 | yes | NR | 1.0 |
| | | | | |
| Health care facilities | footnote m | no | footnote m | footnote m |
| Hospitals | | | | |
| Nursing homes | | | | |
| Ambulatory surgery centers | | | | |
| | | | | |
| Hotels, motels, resorts and dorms | | | | |
| Assembly rooms | 120 | no | NR | 2.0 |
| Bathrooms [b, g] | NA | no | 35 cfm/room | NR |
| Bedrooms | footnote n | yes | NR | NR |
| Conference rooms | 50 | no | NR | 2.0 |
| Dormitory sleeping areas | 20 | yes | NR | NR |
| Casinos | NA | no | 2.0 | NR |
| Living rooms | footnote n | yes | NR | NR |
| Lobbies | 30 | no | NR | NR |
| | | | | |
| Industrial/Factory | | | | |
| Factories and machine shops | 13 | yes | NR | NR |
| Foundries | 13 | yes | NR | NR |
| Sawmills | NA | yes | NR | NR |
| | | | | |
| Offices | | | | |
| Conference rooms | 50 | no | NR | 1.5 |
| Office spaces | 7 | no | NR | 1.5 |
| Reception areas | 60 | no | NR | 1.5 |

| | | | | |
|---|---|---|---|---|
| Telecommunication centers and data entry | 60 | no | NR | 1.5 |
| Places of worship, entertainment and recreation which accommodate less than 100 persons | NA | yes | footnote h | NR |
| Private dwellings, single and multiple | | | | |
| Living areas | 2 people for first bedroom plus one person for each additional bedroom | yes | NR | NR |
| Kitchens [g] | NA | yes | 100 cfm intermittent or 20 cfm continuous | NR |
| Toilet rooms and bathrooms [g] | NA | no | Mechanical exhaust capacity 50 cfm intermittent or 20 cfm continuous [L] | NR |
| Garages, separated by a solid wall for each dwelling | NA | yes | 100 cfm/ vehicle | NR |
| Garages, common for multiple units [b] | NA | no | 0.5 | NR |
| Retail stores, sales floors and showroom floors | 8 | yes | NR | 1.0 |
| Seasonal occupancies, camps and lodges | | | | |
| Dining and recreational areas | 15 | yes | NR | NR |
| Living and sleeping areas | NA | yes | NR | NR |
| Club houses | 15 | yes | NR | NR |
| Drive-ins | 15 | yes | NR | NR |
| Specialty shops | | | | |
| Automotive service and repair garages | NA | no | 0.5 | NR |
| Barber shops | 25 | no | NR | NR |
| Beauty salons [c] | NA | no | 0.5 | NR |
| Car washes | NA | yes | NR | NR |
| Clothier, furniture specialty shops | 8 | yes | NR | 1.0 |
| Florist shops | 8 | yes | NR | 1.0 |
| Hardware, drugs, fabrics stores | 8 | yes | NR | 1.0 |
| Supermarkets | 8 | yes | NR | 1.0 |
| Sports and amusement | | | | |
| Ballrooms and discos | 100 | no | NR | 2.0 |
| Bleacher areas | 363 or 18 in./person | no | NR | 2.0 |
| Bowling centers (seating areas) | 70 | no | NR | 2.0 |
| Game rooms | 70 | no | NR | 2.0 |
| Ice skating rinks (indoor) | 5 | no | NR | NR |
| Natatoriums | NA | NA | 2.0 cfm/sq. ft. pool area | NR |
| Playing floor (gymnasiums) | 30 | no | NR | 2.0 |
| Roller skating rinks (indoor) | 30 | no | NR | 2.0 |
| Spectator areas (non-bleacher) | 150 | no | NR | 2.0 |

| | | | | |
|---|---|---|---|---|
| Storage | | | | |
| Chlorine storage and handling rooms | NA | no | 2.0 | NR |
| Enclosed parking garages [d] | NA | no | 0.5 | NR |
| Warehouses | NA | NA | NR | NR |
| | | | | |
| Theaters | | | | |
| Auditoriums | 150 | no | NR | 2.0 |
| Lobbies | 150 | no | NR | NR |
| Stages, studios | 70 | no | NR | 2.0 |
| Ticket booths | 60 | no | NR | 2.0 |
| | | | | |
| Transportation | | | | |
| Platforms | 100 | no | NR | 2.0 |
| Waiting rooms | 100 | no | NR | 2.0 |
| | | | | |
| Utility and public spaces | | | | |
| Elevator cars | NA | no | NR | footnote g |
| Janitor closets | NA | no | 2.0 or 75 cfm/sink [L] | NR |
| Locker and dressing rooms [b] | NA | no | 0.5 | NR |
| Shower rooms | NA | no | 2.0 | NR |
| Toilet rooms [b, g] | NA | no | 75 cfm/TF [L] | NR |
| Smoking lounges [b, g] | NA | no | 2.0 | NR |
| | | | | |
| Workrooms | | | | |
| Bank vault | 5 | no | NR | NR |
| Meat processing | 10 | yes | NR | NR |
| Pharmacy | 20 | yes | NR | 1.5 |
| Photo studio | 10 | yes | NR | 1.0 |
| Printing | 13 | yes | footnote o | NR |

NA = not applicable; NR = none required; cfm = cubic feet per minute; TF = toilet fixtures (water closets and urinals); A/C = air conditioning

a Based upon net floor area.

b Mechanical exhaust is required and the recirculation of air from these spaces that would otherwise be allowed by IMC section 403.2.1 is prohibited.

c The classification of a 'beauty' shop depends on the types of services provided. Only beauty salons routinely provide chemical processing of hair to produce texture or color changes, or manicures or other services with a similar need for air-borne contaminant and odor control.

d Enclosed parking garages are parking garages with less than 30% open areas in the total wall area enclosing the garage. Ventilation systems in enclosed parking garages shall comply with IMC section 404. A mechanical ventilation system shall not be required in garages having a floor area of 850 square feet or less and used for the storage of 5 or fewer motorized vehicles. Requirements for parking garages shall apply to all buildings, or parts of buildings, into which motor vehicles are driven for loading or unloading or are stored.

e The ventilation rate is based upon cubic feet per minute per square foot of the floor area being ventilated.

f The sum of the outdoor and transfer air from adjacent spaces shall be sufficient to provide an exhaust rate of not less than 1.5 cfm/sf.

g Outdoor air shall be provided at the rate of 1.0 cfm/net sq. ft. floor area. Transfer air is permitted in accordance with IMC section 403.2.2.

h See specific occupancy classification table entries for cfm per net square feet floor area requirements.

i This table is intended as a reference guide with generic Use types listed under those Occupancy types most often associated with the use. When Use types are mixed between Occupancy types and the Use type is unlisted within the specific Occupancy type, the use shall be ventilated as required by the same Use type listed in the other Occupancy type. Unlisted occupancies or uses shall be ventilated as required for the most similar listed occupancy classification acceptable to the department. Rooms that are used for different purposes at different times shall be designed for the greatest amount of ventilation required for any of the uses.

j When unseparated toilet fixtures are included in sleeping areas (such as cells), the room shall be ventilated as required for toilet rooms.
k See sub. (8) for specific requirements and exceptions. Units listed as minimum air change per hour with air conditioning unless otherwise specified.
L Natural ventilation may be allowed under this section.
mFor air ventilation requirements in healthcare facilities, use American Institute of Architects (AIA) Guidelines for Design and Construction of Hospital and Health Care Facilities.
n The minimum mechanical ventilation rate is 15 cfm/room of outside air.
o Refer to IMC chapter 5 for requirements.
p Natural ventilation is allowed for any occupancy provided an engineered analysis accounts for the number of occupants and demonstrates that it meets minimum temperature and air change rate requirements.

SECTION 170. Comm 64.0501 is amended to read:

**Comm 64.0501 (title)** ~~**Required systems**~~ **General.** This is a department exception to the requirements in IMC section ~~501.4~~ 501.3: A mechanically exhausted room or space that is within a dwelling unit which is served by an independent heating, ventilating and air conditioning system is not required to be maintained with negative or neutral pressure.

SECTION 171. Comm 64.0506 (1) is repealed.

SECTION 172. Comm 64.0506 (2) (title) and (a) are amended to read:

**Comm 64.0506 (2)** (title) ~~EXHAUST FANS~~ JOINTS, SEAMS AND PENETRATIONS OF GREASE DUCTS. (a) This is a department alternative to the requirements, but not the exceptions, in IMC section ~~506.3.3~~ 506.3.2: Joints, seams and penetrations of grease ducts may be made with any other means that provide a liquid-tight seal at 1500°F and that are listed and labeled for the application.

SECTION 173. Comm 64.0506 (2) (b) is repealed and recreated to read:

**Comm 64.0506 (2)** (b) This is a department rule in addition to the requirements in IMC section 506.3.2.1: Duct joints may also be flanged joints.

SECTION 174. Comm 64.0506 (2) (bm) is created to read:

**Comm 64.0506 (2)** (bm) The requirements of section IMC 506.3.3.1 are not included as part of this chapter.

SECTION 175. Comm 64.0506 (2) (c) is repealed.

SECTION 176. Comm 64.0507 is repealed and recreated to read:

**Comm 64.0507 Commercial kitchen hoods. (1)** CAPACITY OF HOODS. Substitute the following wording for the introductory paragraph in IMC section 507.13: Commercial food service hoods shall exhaust a minimum net quantity of air determined either through engineering analysis or in accordance with this subsection and IMC sections 507.13.1 through 507.13.4. The net quantity of exhaust air shall be calculated by subtracting any airflow supplied directly to a hood cavity from the total exhaust flow rate of a hood. Where any combination of heavy-duty, medium-duty and light-duty cooking appliances are utilized under a single hood, the exhaust rate required by IMC sections 507.13.1 through 507.13.4 for the heaviest duty appliance covered by the hood shall be used for the entire hood.

**(2)** DISHWASHING APPLIANCES. The requirements of section IMC 507.13.5 are not included as part of this chapter.

SECTION 177. Comm 64.0514 is created to read:

**Comm 64.0514 Energy recovery ventilation systems.** This is a department exception to the requirements in IMC section 514.2: An engineered energy recovery ventilation system design may be used in the systems specified in IMC section 514.2 provided that corrosion, cross-contamination and fouling are addressed by the engineered system.

SECTION 178. Comm 64.0601 is created to read:

**Comm 64.0601 General.** Substitute the following wording for the requirements in IMC section 601.2 Exception 1: Use of a corridor as a source of makeup air for exhaust systems in rooms that open directly onto such corridors shall be permitted provided that each such corridor is directly supplied with outdoor air at a rate greater than the rate of makeup air taken from the corridor.

SECTION 179. Comm 64.0603 (1) is repealed.

SECTION 180. Comm 64.0603 (2) is renumbered 64.0603 and amended to read:

**Comm 64.0603 Duct construction and insulation.** This is a department rule in addition to the requirements in IMC section ~~603.15~~ 603.17: In operating rooms of hospitals and ambulatory surgery centers rooms and autopsy rooms, the bottoms of ventilation supply and return openings shall be at least 3 inches above the floor.

SECTION 181. Comm 64.0604 (2) is repealed.

SECTION 182. Comm 64.0605 (4) is repealed.

SECTION 183. Comm 64.0607 is repealed.

SECTION 184. Comm 64.0702 (1) is amended to read:

**Comm 64.0702 Inside air. (1)** ~~This is a department rule in addition to~~ Substitute the following wording for the requirements in IMC section ~~702.1~~ 702.2: When the space providing air for combustion, ventilation and dilution of flue gases has a minimum volume of 250 cubic feet per 1,000 Btu per hour combined input rating of all appliances, the use of inside air for combustion shall be allowed.

SECTION 185. Comm 64.0702 (2) is repealed.

SECTION 186. Comm 64.0801 (2) is amended to read:

**Comm 64.0801 (2)** This is a department rule in addition to the requirements in IMC section 801.2: Portable or permanently installed, fuel-fired, unvented ~~room heaters~~ heating appliances, except during construction or demolition of a building if the appliances are provided in accordance with ch. Comm 14.

**Note:** See s. Comm ~~65.0620~~ 65.0621 for ~~prohibition~~ use of portable, gas-fired, unvented ~~room heaters~~ heating appliances.

SECTION 187. Comm 64.0801 (3) is created to read:

**Comm 64.0801 (3)** Substitute the following wording for the requirements in IMC section 801.20 and Exception: Plastic pipe and fittings used to vent appliances shall be installed in accordance with the pipe manufacturer's installation instructions and the appliance manufacturer's installation instructions. Solvent cement joints between ABS pipe and fittings shall be cleaned.

SECTION 188. Comm 64.0900 (2) is repealed and recreated to read:

**Comm 64.0900 (2)** Reservoir-type water spray or evaporative pan humidifiers shall not be used in hospitals or ambulatory surgery centers.

SECTION 189. Comm 64.1001 (4) is repealed.

SECTION 190. Comm 64.1201 is repealed.

SECTION 191. Comm 64.1300 is repealed.

SECTION 192. Comm 64.1500 (1) is repealed.

SECTION 193. Comm 64.1500 (2) (a) is amended to read:

**Comm 64.1500 (2)** (a) AIA Guidelines for Design and Construction of Hospital and Health Care Facilities, ~~1996-97~~ 2006.

SECTION 194. Chapter Comm 65 Subchapter I (title) is repealed and recreated to read:

**Subchapter I - Scope**

SECTION 195. Comm 65.0001 is repealed and recreated to read:

**Comm 65.0001 Scope.** This chapter shall regulate the design, installation, operation, maintenance of fuel gas piping systems, fuel gas utilization equipment and gaseous hydrogen systems.

SECTION 196. Comm 65.0002 to 65.0004 are repealed.

SECTION 197. Comm 65.0101 Note is repealed and recreated to read:

**Comm 65.0101 Note:** The sections in this chapter are generally numbered to correspond to the numbering used in the IFGC, i.e., s. Comm 65.0202 refers to section IFGC 202.

SECTION 198. Comm 65.0202 is repealed and recreated to read:

**Comm 65.0202 Definitions. (1)** ADDITIONS. This is a department definition in addition to the definitions in IFGC section 202: "DHFS" means the department of health and family services.

**(2)** SUBSTITUTIONS. This is a department substitution for the corresponding definition in IFGC section 202: "Approved" has the meaning given in s. Comm 62.0202 (2) (a).

SECTION 199. Comm 65.0300 is repealed.

SECTION 200. Comm 65.0301 (1) is amended to read:

**Comm 65.0301 (1)** SCOPE. Substitute the following wording for the requirements in IFGC section 301.1: This chapter shall govern the approval and installation of all equipment and appliances that comprise parts of the installations regulated by this code ~~in accordance with ch. Comm 65 subch. I~~.

SECTION 201. Comm 65.0304 to 65.0306 are repealed.

SECTION 202. Comm 65.0503 is repealed.

SECTION 203. Comm 65.0609 is renumbered Comm 65.0610 and amended to read:

**Comm 65.0610 Duct furnaces.** The requirements in IFGC section ~~609.2~~ 610.2 are not included as part of this chapter.

SECTION 204. Comm 65.0617 is repealed.

SECTION 205. Comm 65.0620 is renumbered Comm 65.0621 and amended to read:

**Comm 65.0621 Portable unvented room heaters.** Substitute the following wording for the requirements in IFGC section ~~620~~ 621: Portable, gas-fired, unvented ~~room heaters~~ heating appliances are prohibited, except during construction or demolition of a building if the appliances are provided in accordance with ch. Comm 14.

**Note:** See s. Comm 64.0801 (2) for ~~prohibition~~ use of portable unvented ~~room heaters~~ heating appliances that are fired with other fuels.

SECTION 206. Comm 65.0629 and 65.0630 are renumbered Comm 65.0630 and 62.0631 and Comm 65.0630 (intro.) and 65.0631, as renumbered, are amended to read:

**Comm 65.0630 Infrared radiant heaters.** These are department rules in addition to the requirements in IFGC section ~~629.1~~ 630.1:

**Comm 65.0631 Boilers.** Substitute the following wording for the requirements in IFGC section ~~630~~ 631: The provisions of ch. Comm 41 shall govern the installation, alteration and repair of boilers and pressure vessels.

SECTION 207. Comm 65.0632 is created to read:

**Comm 65.0632 Equipment installed in existing unlisted boilers.** The requirements in IFGC section 632 are not included as part of this chapter.

SECTION 208. Chapter Comm 66 is created to read:

## Chapter Comm 66
## EXISTING BUILDINGS

### Subchapter I - Purpose, Scope and Application

**Comm 66.0001 Purpose and scope. (1)** PURPOSE. The purpose of ch. Comm 66 is to establish minimum requirements to safeguard public health, safety and welfare insofar as existing public buildings and place of employment are affected by the repair, alteration, change of occupancy, addition or relocation.

**(2)** SCOPE. The scope of ch. Comm 66 is as specified in s. Comm 61.02.

**(3)** INTENT. The intent of this chapter is to provide flexibility to permit the use of alternative approaches to achieve compliance with minimum requirements to safeguard the public health, safety, and welfare insofar as they are affected by the repair, alteration, change of occupancy, addition, and relocation of existing buildings.

**Comm 66.0100 Changes, additions or omissions to IEBC.** Changes, additions or omissions to the IEBC are specified in this subchapter and are rules of the department and are not requirements of the IEBC.

**Comm 66.0101 Administration.** Substitute the following wording for the requirements in IEBC chapter 1:

**(1)** APPLICATION. The provisions of the IEBC shall apply to the repair, alteration, change of occupancy, addition, and relocation of existing buildings. Repairs, alterations, change of occupancy, existing buildings to which additions are made, historic buildings, and relocated buildings complying with the provisions of the IBC, IMC, IPC, and IRC as applicable shall be considered in compliance with the provisions of this code.

**(2)** CHANGE OF OCCUPANCY TO A PUBLIC BUILDING OCCUPANCY. Where a building or portion of a building that has not been previously occupied or used as a public building or place of employment is to be changed to an occupancy or use that constitutes a public building or place of employment, the building or portion of a building shall comply with the IBC for new construction, except for IBC rules relating to the properties of building materials.

**(3)** TEMPORARY USE. A municipal fire or building code official may allow an existing building or a portion of an existing building to be used temporarily in a manner that differs from the approved use for the building or space subject to all of the following provisions:

(a) The official shall determine the time frame within which the temporary use is permitted, based on the extent hazards are created by the temporary use. This time frame may not exceed 180 days, except the official may grant extensions for demonstrated cause.

(b) Except as provided in par. (c), buildings or spaces considered for temporary use shall conform to the requirements of this code as necessary to ensure the public safety, health and general welfare.

(c) The official may require additional safety requirements for a temporary use as a trade-off for any safety provisions that may be lacking.

(d) The official may terminate the approval for a temporary use at any time and order immediate discontinuance of the use or complete evacuation of the building or space.

**(4)** COMPLIANCE METHOD. (a) The repair, alteration, change of occupancy, addition, or relocation of all existing buildings shall comply with one of the methods listed in par. (b) or (c) as selected by the applicant. Application of a method shall be the sole basis for assessing the compliance of work by the code official. Paragraphs (b) and (c) shall not be applied in combination with each other.

(b) Repairs, alterations, additions, changes in occupancy, and relocated buildings complying with the applicable requirements of IEBC chapters 4 through 12 shall be considered in compliance with the provisions of this code.

(c) Repairs, alterations, additions, changes in occupancy, and relocated buildings complying with IEBC chapter 13 shall be considered in compliance with the provisions of this code.

**Comm 66.0202 General definitions. (1)** ADDITIONS. This is a department definition in addition to the definitions in IEBC section 202: "Exhibit building" means a qualified historic building that is open to the general public only for display or tours.

**(2)** SUBSTITUTIONS. Substitute the following definition for the corresponding definition in IEBC section 202: "Historic building" means a "qualified historic building" as defined under s. Comm 61.04 (5).

**Comm 66.0300 Prescriptive compliance method.** The requirements in IEBC chapter 3 are not included as part of this code.

**Comm 66.0506 Structural evaluation.** The requirements in IEBC section 506.2 are not included as part of this code.

**Comm 66.0509 Plumbing.** The requirements in IEBC section 509 are not included as part of this code.

**Comm 66.0602 Building elements and materials. (1)** MATERIALS AND METHODS. Substitute the following wording for the requirements in IEBC section 602.3: All new work shall comply with materials and methods requirements in the ICC EC, IBC, IECC, IFGC, IMC, and IPC, as applicable, that specify material standards, detail of installation and connection, joints, penetrations, and continuity of any element, component, or system in the building.

**(2)** INTERNATIONAL FUEL GAS CODE. The requirements in IEBC section 603.3.1 are not included as part of this code.

**Comm 66.0607 Energy conservation requirements.** Substitute the following wording for the requirements in IEBC section 607.1:

**(1)** ADDITIONS, ALTERATIONS, RENOVATIONS OR REPAIRS. Except as specified in sub. (2), additions, alterations, renovations or repairs to an existing building, building system or portion thereof shall conform to the provisions of IECC as they relate to new construction without requiring the unaltered portions of the existing building or building system to comply with the IECC. Additions, alterations, renovations, or repairs shall not create an unsafe or hazardous condition or overload existing building systems.

**(2)** EXCEPTIONS. All of the following need not comply provided the energy use of the building is not increased:

(a) Storm windows installed over existing fenestration.

(b) Glass only replacements in an existing sash and frame.

(c) Existing ceiling, wall or floor cavities exposed during construction provided that these cavities are filled with insulation.

(d) Construction where the existing roof, wall or floor cavity is not exposed.

**Comm 66.0701 Compliance.** This is a department rule in addition to the exceptions under IEBC section 701.3: The installation or extension of an automatic sprinkler system may exclude the protection of combustible concealed spaces that are not accessible in existing buildings.

**Comm 66.0710 Minimum plumbing fixtures.** Substitute the following wording for the requirements in IEBC section 710.1: Where the occupant load of a story is increased by more than 20 percent, plumbing fixtures for the story shall be provided in quantities specified in the IBC based on the increased occupant load.

**Comm 66.0711 Minimum energy conservation requirements.** Substitute the following wording for the requirements in IEBC section 711: Level 2 alterations to existing buildings or structures shall comply with s. Comm 66.0608.

**Comm 66.0802 Emergency Controls.** The requirements in IEBC section 802.2.1 are not included as part of this code.

**Comm 66.0808 Minimum energy conservation requirements.** Substitute the following wording for the requirements in IEBC section 808.1: Level 3 alterations to existing buildings or structures shall comply with s. Comm 66.0608.

**Comm 66.0809 Plumbing.** These are department rules in addition to the requirements in IEBC chapter 8: (1) Pursuant to s. 101.128, Stats., level 3 alterations within an existing facility

where the public congregates shall necessitate that plumbing fixtures serving the work area be provided in a ratio of at least 2 water closets for females as to each water closet and urinal for the males.

(2) (a) Under this section "facility where the public congregates" has the meaning has given in s. 101.128 (1) (b), Stats.

**Note:** Section 101.128 (1) (b), Stats., reads: "Facility where the public congregates" means any of the following that has a general capacity or a seating capacity of 500
or more persons:
1. An amusement facility.
2. A convention or trade hall or center.
3. A specialty event center.
4. A sports or entertainment arena, center or building.
5. A stadium.
6. An airport, bus terminal, train station or other transportation center.

(b) Under this section "alterations" has the meaning has given in s. 101.128 (1) (d), Stats for "renovation".

**Note:** Section 101.128 (1) (b), Stats., reads: (d) "Renovation" means any structural remodeling, improvement or alteration of an existing facility where the public congregates.
"Renovation" does not include any of the following:
1. Reroofing.
2. Cosmetic remodeling, including painting or the installation of wall covering, of paneling, of floor covering or of suspended ceilings.
3. An alteration to an electrical or mechanical system.

**Comm 66.0901 Change of occupancy. (1)** CHANGE IN OCCUPNANCY WITH NO OCCUPANCY CLASSIFICATION. Substitute the following wording for the requirements in IEBC section 901.2: A change in occupancy, as defined in IEBC section 202, with no change of occupancy classification shall not be made to any structure which will subject the structure to any special provisions of the applicable international codes, including the provisions of IEBC sections 902 through 911, without the approval of the code official.

**(2)** CHANGE OF OCCUPANCY CLASSIFICATION. This is a department rule in addition to the requirements in IEBC section 901.3: Buildings undergoing a change in occupancy that would result in an increase in demand for either fossil fuel or electrical energy shall comply with IECC.

**(3)** CERTIFICATION OF OCCUPANCY REQUIRED. The requirements in IEBC section 901.4 are not included as part of this code.

**Comm 66.0910 Plumbing.** Substitute the following wording for the requirements in IEBC section 910: Where the occupant load of a story is increased by more than 20 percent, plumbing fixtures for the story shall be provided in quantities specified in the IBC based on the increased occupant load.

**Comm 62.0911 Other requirements.** This is a department rule in addition to the requirements in IEBC section 911: At least one existing elevator shall be provided with emergency recall operation and emergency in-car operation complying with ch. Comm 18 when

an existing building or structure that is greater than 60 feet in height is changed to include a Group R-1 or R-2 occupancy.

**Comm 66.1101 Historic buildings. (1)** GENERAL. The requirements in IEBC section 1101.2 are not included as part of this code.

**(2)** EXHIBIT BUILDINGS. These are department rules in addition to the requirements in IEBC section 1105: Historic buildings to be used as exhibit buildings shall comply with all of the following requirements:

(a) The building shall be open to the public only under the supervision of a tour guide.

(b) The building may not be lived in, slept in or worked in, except for the purpose of demonstrating to the public how people lived in a particular era.

(c) Smoking is prohibited in the building.

(d) Open flame equipment may not be used in the building, except for fire places and other mechanical equipment original to the building.

(e) Fire extinguishers shall be installed in exhibit buildings and may be located in a nonconspicuous location but accessible to the occupants.

(f) 1. At least one smoke detector shall be provided for each 1,200 square feet of floor area with a minimum of one smoke detector per floor level.

2. a. Except as specified in subpar. 2. b., where electricity is provided in the exhibit building, the smoke detectors shall be connected to the electrical power.

b. Where no electrical power is provided to an exhibit building, the smoke detectors shall be of a battery type.

c. Smoke detectors shall be tested weekly.

(g) Exhibit buildings provided with only one means of egress shall be restricted to a total capacity of 12 people, and not more than 6 people may be located above or below the first floor at any one time.

(h) Stairways without 6−foot, 4−inch vertical headroom clearance shall have signs posted warning occupants of the headroom clearance available.

(i) Exit signs shall be provided in accordance with the prevailing code in exhibit buildings occupied prior to ½-hour before sun rise and ½-hour after sun set and in all areas not provided with natural lighting.

**Comm 66.1301 Compliance with other codes.** The requirements in IEBC section 1301.3.2 are not included as part of this code.

SECTION 209. Chapter Comm 70 is repealed.

SECTION 210. Chapters Comm 75 to 79 (title) is amended to read:

**Chapters Comm 75 to 79 ~~Existing Buildings~~ <u>Buildings Constructed Prior to 1914</u>**

**END**

* * * * * * * * * * * * * * * * * * * * * * * * * * * * * * * * * * * * * * * * * * * * * * * * * * * * * * * * * * * * * * * *

EFFECTIVE DATE

Pursuant to s. 227.22 (2) (b), Stats, these rules shall take effect on July 1, 2007.

* * * * * * * * * * * * * * * * * * * * * * * * * * * * * * * * * * * * * * * * * * * * * * * * * * * * * * * * * * * * * * * *

*File Ref: bldg code update/Comm 61-66 master changes.doc*