Chapter Comm 41

APPENDIX

(EXCERPTS FROM BOILER, PRESSURE VESSEL AND PIPING CODES AND STANDARDS)

Excerpts from the following boiler, pressure vessel and piping codes and standards are reproduced here strictly for reference: ASME Sections I, IV and VIII–Div-1 2010 and ANSI/ASME B31.1 2010. This information has been included to provide a general idea as to the requirements of these codes and standards. Users of this information must be cautioned that these excerpts do not provide complete guidelines for inspection, installation, operation and manufacturing.

Only portions of each code and standard thought to be frequently used by persons not having direct access to the complete documents have been included. It must be noted that these codes and standards change on a periodic basis as indicated in s. Comm 41.10. Those who are bound by the rules of ch. Comm 41 must avail themselves of the applicable code section or standards listed in s. Comm 41.10.

EXCERPTS FROM: ASME BOILER AND PRESSURE VESSEL CODE
SECTION I - POWER BOILERS
2010 EDITION
INTRODUCTION

This Code covers rules for construction of power boilers[1], electric boilers[2], miniature boilers[3], high-temperature water boilers[4], heat recovery steam generators[5], and certain fired pressure vessels[6] to be used in stationary service and includes those power boilers used in locomotive, portable, and traction service. Reference to a paragraph includes all the subparagraphs and subdivisions under that paragraph.

The Code does not contain rules to cover all details of design and construction. Where complete details are not given, it is intended that the manufacturer, subject to the acceptance of the Authorized Inspector, shall provide details of design and construction which will be as safe as otherwise provided by the rules in the Code.

The scope of jurisdiction of Section I applies to the boiler proper and to the boiler external piping.

Superheaters, economizers, and other pressure parts connected directly to the boiler without intervening valves shall be considered as parts of the boiler proper, and their construction shall conform to Section I rules. Boiler external piping shall be considered as that piping which begins where the boiler proper or isolable superheater, or isolable economizer terminates at:

(a) the first circumferential joint for welding end connections; or

(b) the face of the first flange in bolted flanged connections; or

(c) the first threaded joint in that type of connection; and which extends up to and including the valve or valves required by this Code.

ASME Code Certification (including Data Forms and Code Symbol Stamping), and/or inspection by the Authorized Inspector, when required by this Code, is required for the boiler proper and the boiler external piping.

Construction rules for materials, design, fabrication, installation, and testing of the boiler external piping are contained in ASME B3l.l, Power Piping. Piping beyond the valve or valves required by Section I is not within the scope of Section I, and it is not the intent that the Code Symbol Stamp be applied .to such piping or any other piping.

The material for forced-circulation boilers, boilers with no fixed steam and water line, and high-temperature water boilers shall conform to the requirements of the Code. All other requirements shall also be met except where they relate to special features of construction made necessary in boilers of these types, and to accessories that are manifestly not needed or used in connection with such boilers, such as water gages and water columns.

Reheaters receiving steam which has passed through part of a turbine or other prime mover and separately fired steam superheaters which are not integral with the boiler are considered fired pressure vessels and their construction shall comply with Code requirements for superheaters, including safety devices. Piping between the reheater connections and the turbine or other prime mover is not within the scope of the Code. Steam piping to the inlet connections and from the outlet connections of nonintegral separately fired superheaters is not within the scope of the Code.

A pressure vessel in which steam is generated by the application of heat resulting from the combustion of fuel (solid, liquid, or gaseous) shall be classed as a fired steam boiler.

Unfired pressure vessels in which steam is generated shall be classed as unfired steam boilers with the following exceptions:

(a) vessels known as evaporators or heat exchangers

(b) vessels in which steam is generated by the use of heat resulting from operation of a processing system containing a number of pressure vessels such as used in the manufacture of chemical and petroleum products

Unfired steam boilers shall be constructed under the provisions of Section I or Section VIII.

Expansion tanks connected to high-temperature water boilers without intervening valves shall be constructed to the requirements of Section I or Section VIII.

A pressure vessel in which an organic fluid is vaporized by the application of heat resulting from the combustion of fuel (solid, liquid, or gaseous) shall be constructed under the provisions of Section I. Vessels in which vapor is generated incidental to the operation of a processing system, containing a number of pressure vessels such as used in chemical and petroleum manufacture, are not covered by the rules of Section I.

---

[1] Power boiler - a boiler in which steam or other vapor is generated at a pressure of more than 15 psi (100 kPa) for use external to itself.

[2] Electric boiler - a power boiler or a high-temperature water boiler in which the source of heat is electricity.

[3] Miniature boiler - a power boiler or a high-temperature water boiler in which the limits specified in PMB-2 are not exceeded.

[4] High-temperature water boiler - a water boiler intended for operation at pressures in excess of 160 psi (1.1 MPa) and/or temperatures in excess of 250°F (120°C).

[5] Heat recovery steam generator (HRSG) - a boiler that has as its principal source of thermal energy a hot gas stream having high-ramp rates and temperatures such as the exhaust of a gas turbine.

[6] Fired pressure vessel- reheaters, isolable superheaters, and nonintegral separately fired superheaters.

PART PG
GENERAL REQUIREMENTS FOR ALL METHODS OF CONSTRUCTION

GENERAL

PG-1 SCOPE

The requirements of Part PG apply to power boilers and high pressure, high-temperature water boilers and to parts and appurtenances thereto and shall be used in conjunction with the specific requirements in the applicable Parts of this Section that pertain to the methods of construction used.

PG-2 SERVICE LIMITATIONS

PG-2.1 The rules of this Section are applicable to the following services:

(a) boilers in which steam or other vapor is generated at a pressure of more than 15 psig (100kPa)

(b) high-temperature water boilers intended for operation at pressures exceeding 160 psig (1.1 MPa) and/or temperatures exceeding 250°F (120°C)

PG-2.2 For services below those specified in PG-2.1 it is intended that rules of Section IV apply; however, boilers for such services may be constructed and stamped in accordance with this Section provided all applicable requirements are met.

PG-2.3 Coil-type hot water boilers where the water can flash into steam when released directly to the atmosphere through a manually operated nozzle may be exempted from the rules of this Section provided the following conditions are met:

(a) There is no drum, header, or other steam space.
(b) No steam is generated within the coil.
(c) Tubing outside diameter does not exceed 1 in. (25 mm).
(d) Pipe size does not exceed NPS ¾ (DN 20).
(e) Nominal water capacity does not exceed 6 gal (23 L).
(f) Water temperature does not exceed 350°F (175°C).
(g) Adequate safety relief valves and controls are provided.

PG-3 REFERENCED STANDARDS

Specific editions of standards referenced in this Section are shown in A-360.

PG-4 UNITS

Either U.S. Customary units or SI units may be used for compliance with all requirements of this edition, but one system shall be used consistently throughout for all phases of construction.

Either the U.S. Customary units or SI units that are listed in Mandatory Appendix II are identified in the text, or are identified in the nomenclature for equations, shall be used consistently for all phases of construction (e.g., materials, design, fabrication, and reports). Since values in the two systems are not exact equivalents, each system shall be used independently of the other without mixing U.S. Customary units and SI units

When SI units are selected, U.S. Customary values in referenced specifications that do not contain SI units shall be converted to SI values to at least three significant figures for use in calculations and other aspects of construction.

MATERIALS

PG-5 GENERAL

PG-5.1 Except as otherwise permitted in PG-8.2, PG-8.3, PG-10, and PG-11, material subject to stress due to pressure shall conform to one of the specifications given in Section II and shall be limited to those that are listed in the Tables of Section II, Part D. The manufacturer shall ensure that the correct material has been received and is properly identified before proceeding with construction (see A-302.4). Materials shall not be used at temperatures above those for which stress values are limited, for Section I construction, in the Tables of Section II, Part D. Specific additional requirements described in PG-5 through PG-13 shall be met as applicable.

PG-5.2 Material covered by specifications in Section II is not restricted as to the method of production unless so stated in the specification, and as long as the product complies with the requirements of the specification.

PG-5.3 If, in the development of the art of boiler construction, it is desired to use materials other than those herein described, data should be submitted to the Boiler and Pressure Vessel Committee in accordance with the requirements of Appendix 5 of Section II, Part D. Material not completely identified with any approved Code specifications may be used in the construction of boilers under the conditions outlined in PG-10.

PG-5.4 Size Limits and Tolerances

PG-5.4.1 Materials outside the limits of size or thickness given in the title or scope clause of any specification in Section II may be used if the material is in compliance with the other requirements of the specification, and no similar limitation is given in the rules for construction.

PG-5.4.2 Pipe having a tolerance of ±1% on either the O.D. or the I.D. rather than the tolerance specified in the material specification, may be used, provided the material complies with all other requirements of the specifications. When used under external pressure, such pipe shall be limited to a maximum of 24 in. (600 mm) in diameter. The pipe shall include the designation 1% O.D. or 1% I.D., as appropriate, in any required documentation and marking of the material.

PG-5.5 The use of austenitic alloy steel is permitted for boiler pressure parts that are steam touched in normal operation. Except as specifically provided in PG-9.1.1, PG-12, and PEB-5.3, the use of such austenitic alloys for boiler pressure parts that are water wetted in normal service is prohibited.[7]

PG-5.6 P-No. 15E, Group 1 Materials

PG-5.6.1 If during any phase of manufacturing or erection any portion of the component that does not contain a weld is heated to a temperature greater than 1,470°F (800°C), one of the following actions shall be performed:

(a) The component shall be reaustenitized and retempered in its entirety in accordance with the specification requirements.

(b) That portion of the component heated above 1,470°F (800°C), including the heat-affected zone created by the local heating, must be replaced or must be removed, reaustenitized, and retempered in accordance with the specification requirements and then replaced in the component.

(c) If the allowable stress values to be used are less than or equal to those provided in Table 1A of Section II, Part D for Grade 9 (e.g., SA-213 T9, SA-335 P9, or equivalent product specifications) at the design temperature, then the requirements stated above may be waived, provided that the portion of the component heated above 1,470°F (800°C) is retempered in accordance with the specification requirements. The use of this provision shall be noted on the Manufacturer's Data Report.

PG-5.6.2 If during any phase of manufacturing or erection of the component, any portion that does contain a weld is heated above 1,425°F (775°C), then the requirements of Notes (3) and (4) of Table PW-39 for P-No. 15E, Group 1 Materials, shall apply for reheat treatment.

PG-6 PLATE

PG-6.1 Steel plates for any part of a boiler subject to pressure, whether or not exposed to the fire or products of combustion, shall be of pressure vessel quality in accordance with one of the following specifications:

SA-202 Pressure Vessel Plates, Alloy Steel, Chromium-Manganese-Silicon

SA-204 Pressure Vessel Plates, Alloy Steel, Molybdenum

SA-240 (Type 405 only) Pressure Vessel Plates, Alloy Steel (Ferritic Stainless), Chromium

SA-285 Pressure Vessel Plates, Carbon Steel, Low- and Intermediate-Tensile Strength

SA-299 Pressure Vessel Plates, Carbon Steel, Manganese-Silicon

SA-302 Pressure Vessel Plates, Alloy Steel, Manganese-Molybdenum and Manganese-Molybdenum-Nickel

SA-387 Pressure Vessel Plates, Alloy Steel, Chromium-Molybdenum

SA-515 Pressure Vessel Plates, Carbon Steel, for Intermediate- and Higher-Temperature Service

SA-516 Pressure Vessel Plates, Carbon Steel, for Moderate- and Lower-Temperature Service

SA/AS 1548 Steel Plates for Pressure Equipment

SA/EN-10028-2 Flat Products Made of Steels for Pressure Purposes

SA/JIS G3118 Carbon Steel Plates for Pressure Vessels for Intermediate and Moderate Temperature Service

PG-55 SUPPORTS AND ATTACHMENT LUGS

PG-55.1 Lugs or hangers when used to support a boiler of any type shall be properly fitted to the surfaces to which they are attached.

PG-55.2 Lugs, hangers, or brackets may be attached by fusion welding provided the welding meets the requirements of Part PW, including stress relieving but omitting volumetric examination and provided they are attached by full penetration welds, combination groove and fillet welds, or by fillet welds along the entire periphery or contact edges. Some acceptable forms of welds for lugs, hangers, or brackets are shown in Fig. PW-16.2. The materials for lugs, hangers, or brackets are not limited to those listed in Tables 1A and 1B of Section II, Part D, but shall be of weldable quality. The allowable load on the fillet welds shall equal the product of the weld area based on minimum leg dimension, the allowable stress value in tension of the material being welded, and the factor 0.55. When using welded pipe, the stress values given in Table 1A of Section II, Part D, may be increased to that of the basic material by eliminating the stated weld efficiencies.

[7] Austenitic alloys are susceptible to intergranular corrosion and stress corrosion cracking when used in boiler applications in water wetted service. Factors that affect the sensitivity to these metallurgical phenomena are applied or residual stress and water chemistry. Susceptibility to attack is usually enhanced by using the material in a stressed condition with a concentration of corrosive agents (e.g., chlorides, caustic, or reduced sulfer species). For successful operation in water environments, residual and applied stresses must be minimized and careful attention must be paid to continuous control of water chemistry.

FIG. PG-58.3.1(a) CODE JURISDICTIONAL LIMITS FOR PIPING — DRUM-TYPE BOILERS

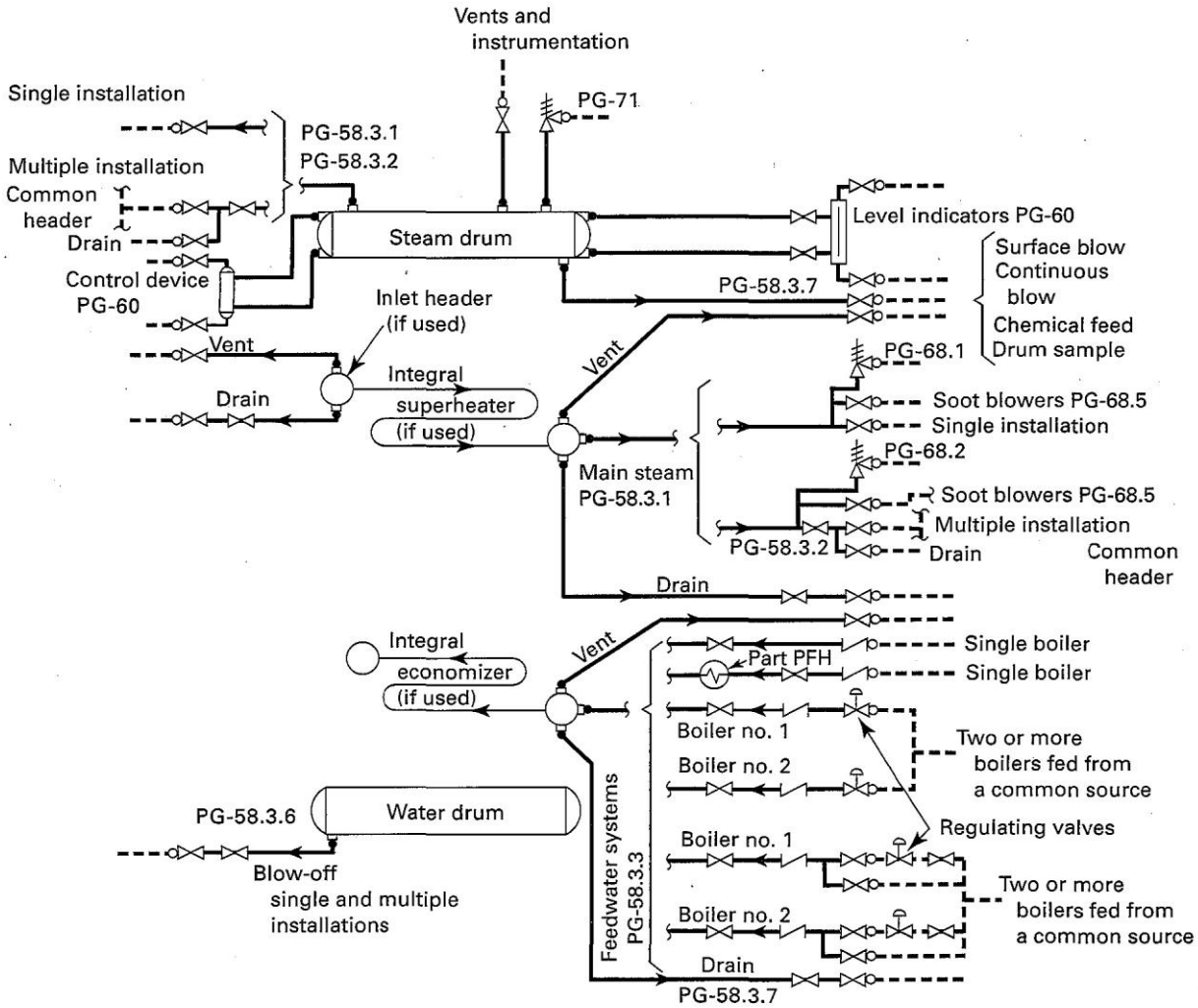

Administrative Jurisdiction & Technical Responsibility

——— Boiler Proper — The ASME Boiler and Pressure Vessel Code (ASME BPVC) has total administrative jurisdiction and technical responsibility (refer to Section I Preamble)

●——— Boiler External Piping and Joint — The ASME BPVC has total administrative jurisdiction (mandatory certification by Code Symbol stamping, ASME Data Forms, and Authorized Inspection) of Boiler External Piping and Joint. The ASME Section Committee B31.1 has been assigned technical responsibilty.

○- - - - - Non-Boiler External Piping and Joint — Not Section I jusidiction (see applicable ASME B31 Code).

FIG. PG-58.3.1(b) CODE JURISDICTIONAL LIMITS FOR PIPING — ISOLABLE ECONOMIZERS LOCATED IN FEEDWATER PIPING AND ISOLABLE SUPERHEATERS IN MAIN STEAM PIPING

(Boiler Pressure Relief Valves, Blowoff, and Miscellaneous Piping for Boiler Proper Not Shown for Clarity)

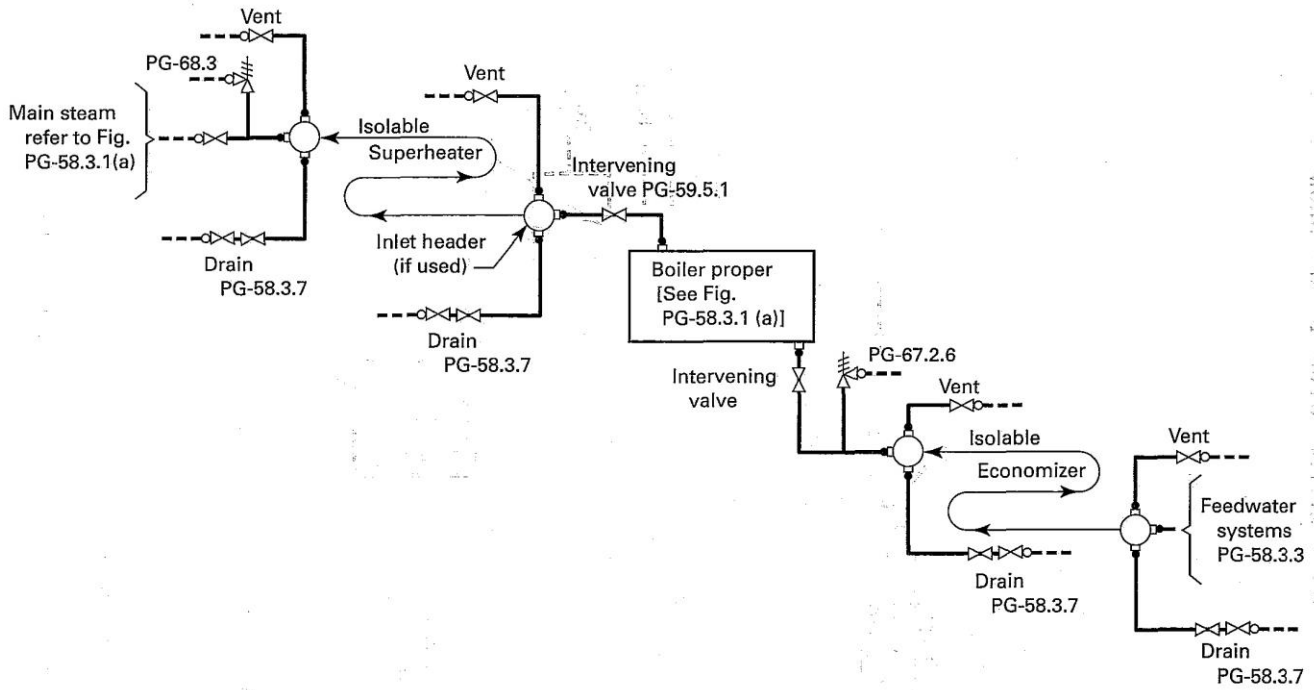

Administrative Jurisdiction & Technical Responsibility

——— Boiler Proper — The ASME Boiler and Pressure Vessel Code (ASME BPVC) has total administrative jurisdiction and technical responsibility (refer to Section I Preamble)

●——— Boiler External Piping and Joint — The ASME BPVC has total administrative jurisdiction (mandatory certification by Code Symbol stamping, ASME Data Forms, and Authorized Inspection) of Boiler External Piping and Joint. The ASME Section Committee B31.1 has been assigned technical responsibilty.

○- - - - - Non-Boiler External Piping and Joint — Not Section I jusidiction (see applicable ASME B31 Code).

FIG. PG-58.3.1(c) CODE JURISDICTIONAL LIMITS FOR PIPING — REHEATERS AND NONINTEGRAL SEPARATELY FIRED SUPERHEATERS

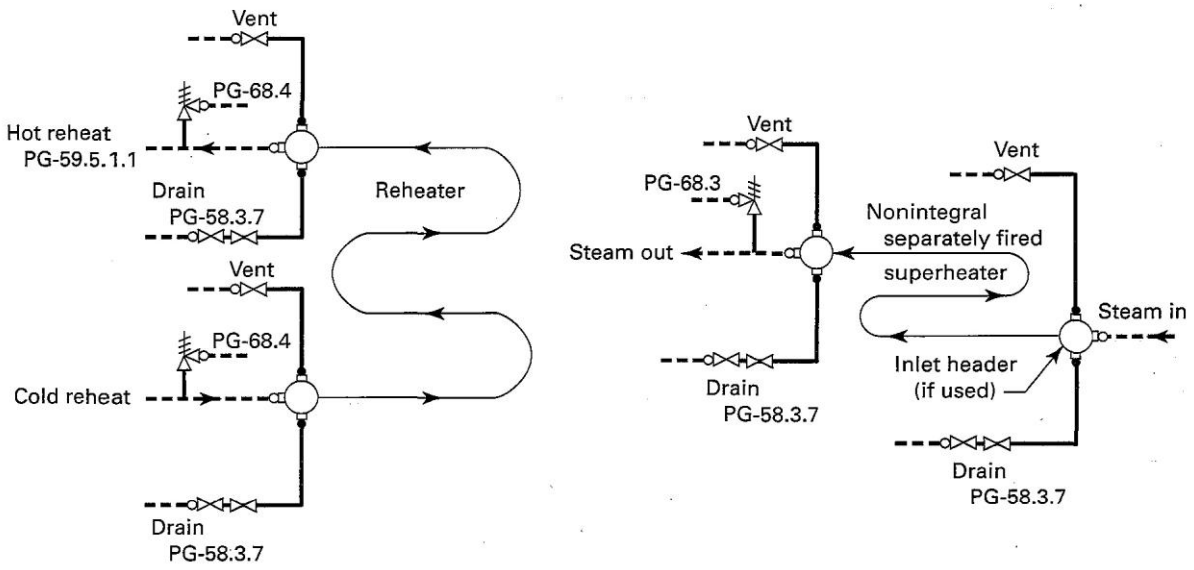

Administrative Jurisdiction & Technical Responsibility

——— Boiler Proper — The ASME Boiler and Pressure Vessel Code (ASME BPVC) has total administrative jurisdiction and technical responsibility (refer to Section I Preamble)

●——— Boiler External Piping and Joint — The ASME BPVC has total administrative jurisdiction (mandatory certification by Code Symbol stamping, ASME Data Forms, and Authorized Inspection) of Boiler External Piping and Joint. The ASME Section Committee B31.1 has been assigned technical responsibilty.

○- - - - - Non-Boiler External Piping and Joint — Not Section I jusidiction (see applicable ASME B31 Code).

FIG. PG-58.3.2 CODE JURISDICTIONAL LIMITS FOR PIPING — AN EXAMPLE OF FORCED-FLOW STEAM GENERATORS WITH NO FIXED STEAM OR WATERLINE

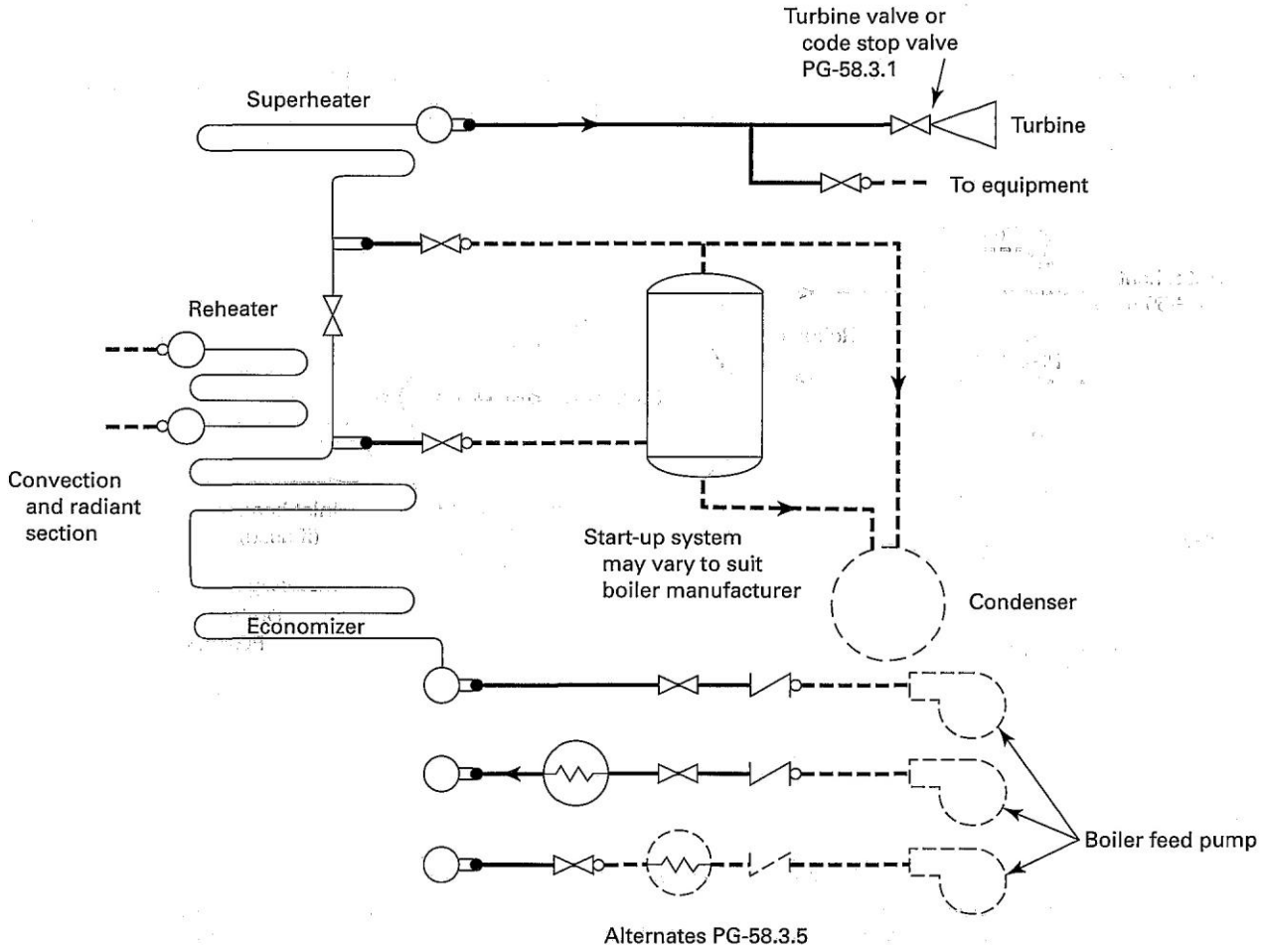

Administrative Jurisdiction & Technical Responsibility

——— Boiler Proper — The ASME Boiler and Pressure Vessel Code (ASME BPVC) has total administrative jurisdiction and technical responsibility (refer to Section I Preamble)

●——— Boiler External Piping and Joint — The ASME BPVC has total administrative jurisdiction (mandatory certification by Code Symbol stamping, ASME Data Forms, and Authorized Inspection) of Boiler External Piping and Joint. The ASME Section Comitee B31.1 has been assigned technical responsibilty.

O- - - - Non-Boiler External Piping and Joint — Not Section I jusidiction (see applicable ASME B31 Code).

FIG. PG-58.3.3 CODE JURISDICTIONAL LIMITS FOR PIPING — AN EXAMPLE OF STEAM SEPARATOR TYPE FORCED-FLOW STEAM GENERATORS WITH NO FIXED STEAM OR WATERLINE

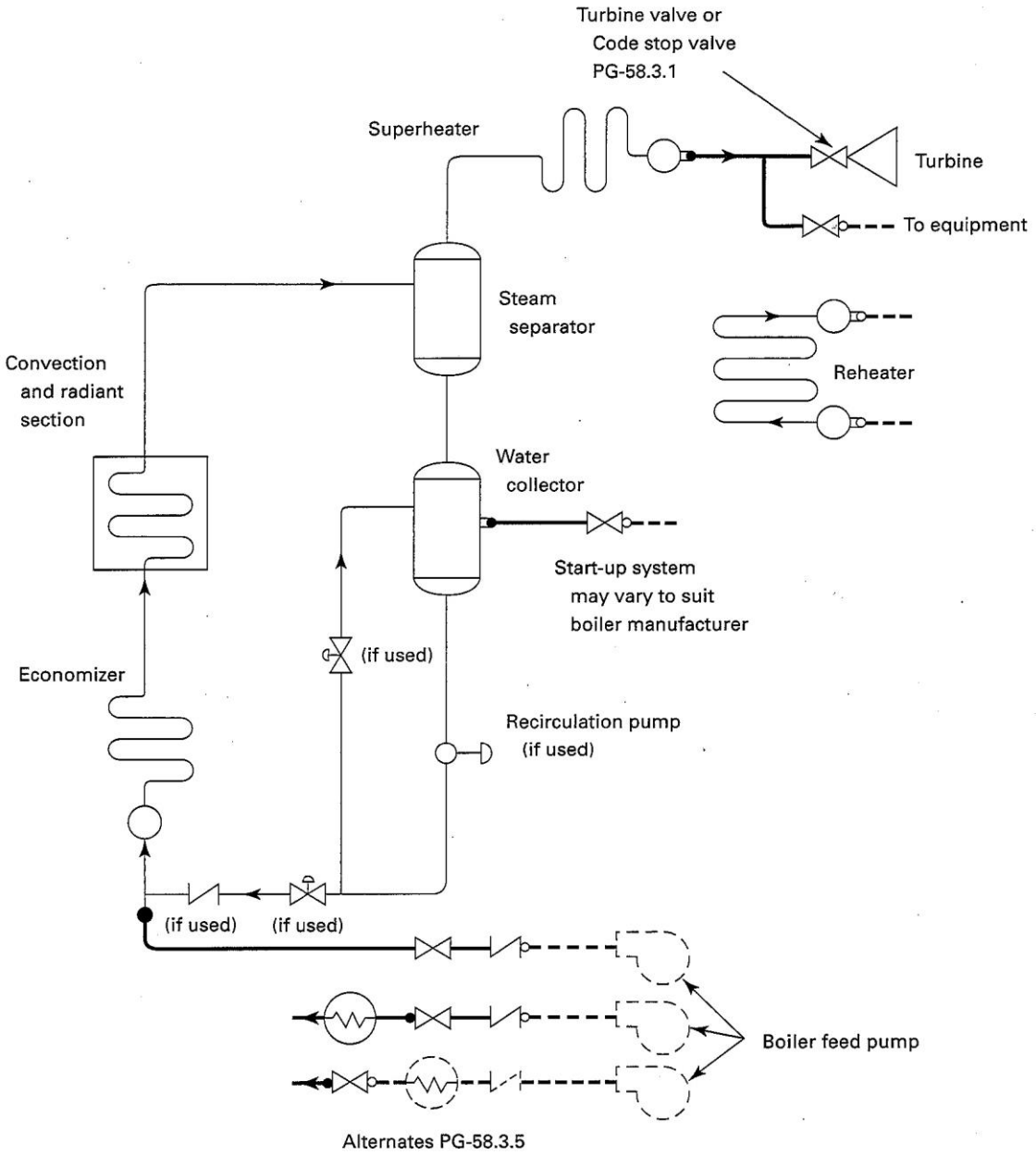

ADMINISTRATIVE JURISDICTION AND TECHNICAL RESPONSIBILITY

——— Boiler Proper – The ASME Boiler and Pressure Vessel Code (ASME BPVC) has total administrative jurisdiction and technical responsibility (refer to Section I Preamble).

●——— Boiler External Piping and Joint – The ASME BPVC has total administrative jurisdiction (mandatory certification by Code Symbol stamping, ASME Data Forms, and Authorized Inspection) of Boiler External Piping and Joint. The ASME Section Committee B31.1 has been assigned technical responsibility.

○- - - - Non-Boiler External Piping and Joint – Not Section I jurisdiction (see applicable ASME B31 Code).

BOILER EXTERNAL PIPING AND BOILER PROPER CONNECTIONS

PG-58 OUTLETS AND EXTERNAL PIPING

PG-58.1 General. The rules of this subparagraph apply to the boiler external piping as defined in the Preamble.

PG-58.2 Boiler External Piping Connections to Boilers. All boiler external piping connected to a boiler for any purpose shall be attached to one of the types of joints listed in PG-59.1.1.1, PG-59.1.1.2, and PG-59.1.1.3.

PG-58.3 Boiler External Piping. The following defines the Code Jurisdictional Limits of the boiler external piping systems, including general requirements, valves, and inspection. The limits are also shown in Figs. PG-58.3.1 and PG-58.3.2. The materials, design, fabrication, installation, and testing shall be in accordance with ASME B31.1, Power Piping.

PG-58.3.1. The steam piping connected to the boiler drum or to the superheater outlet header shall extend up to and including the first stop valve in each connection, except as required by PG-58.3.2. In the case of a single boiler and prime mover installation, the stop valve required herein may be omitted provided the prime mover throttle valve is equipped with an indicator to show whether the valve is open or closed and is designed to withstand the required hydrostatic pressure test of the boiler.

For an isolable or separately fired superheater which discharges steam directly to a process stream, the stop valve required by this paragraph and the safety valve(s) required by PG-68 may be omitted provided the following conditions are satisfied:

(a) The boiler is a drum-type boiler in a single-boiler installation.

(b) The steam discharge passes through the process stream to the atmosphere with no intervening valves.

(c) The system shall be designed so that the process stream through which the steam discharge passes cannot be obstructed in such a way as to cause the pressure in the superheater to exceed that permitted by PG-67.2, with maximum steam flow from the boiler to the superheater. Flow and pressure calculations demonstrating that the superheater will not be overpressurized under any steam flow conditions shall be documented and made available to the Inspector. These calculations shall be certified by a Professional Engineer experienced in the mechanical design of power plants.

(d) There is no valve on the discharge side of the superheater.

(e) Section I jurisdiction shall include the pressure parts between the superheater inlet and the outlet at:

(1) the first circumferential joint for welding end connections; or

(2) the face of the first flange in bolted flange connections; or

(3) the first threaded joint in that type of connection.

PG-58.3.2 When two or more boilers are connected to a common steam header, or when a single boiler is connected to a header having another steam source (e.g., a turbine extraction line), the connection from each boiler having a manhole opening shall be fitted with two stop valves having an ample free-blow drain between them. The boiler external piping includes all piping from the boiler proper up to and including the second stop valve and the free-blow drain valve.

PG-58.3.3 The feedwater piping for all boilers, except high-temperature water boilers and forced-flow steam generators complying with PG-58.3.5, shall extend through the required stop valve and up to and including the check valve except as required by PG-58.3.4. On a single boiler-turbine unit installation the boiler feed shutoff valve may be located upstream from the boiler feed check valve.

If a feedwater heater or heaters meeting the requirements of Part PFH are installed between the required stop valve and the boiler, and are fitted with isolation and bypass valves, provisions must be made to prevent the feedwater pressure from exceeding the maximum allowable working pressure of the piping or feedwater heater, whichever is less. Control and interlock systems are permitted in order to prevent overpressure.

PG-58.3.4 When two or more boilers are fed from a common source, the piping shall be up to and including a globe or regulating valve located between the check valve required in PG-58.3.3 and the source of supply. If the regulating valve is equipped with an isolation valve and a bypass valve, the piping shall be up to and including both the isolation valve downstream from the regulating valve and the shutoff valve in the bypass.

PG-58.3.5 The feedwater piping for a forced-flow steam generator with no fixed steam and waterline may terminate up to and including the stop valve near the boiler and omitting the check valve near the boiler, provided that a check valve having a pressure rating no less than the boiler inlet design pressure is installed at the discharge of the boiler feed pump or elsewhere in the feedline between the feed pump and the feed stop valve. If the feedwater heater(s) is fitted with isolation and bypass valves, the applicable requirements of PG-58.3.3 must be met.

PG-58.3.6 The blowoff piping for all boilers, except forced-flow steam generators with no fixed steam and waterline, high-temperature water boilers, and those used for traction and/or portable purposes, when the maximum allowable working pressure exceeds 100 psi (700kPa) shall extend through and including the second valve. The blowoff piping for all traction and/or portable boilers and for forced circulation and electric boilers

having a normal water content not exceeding 100 gal (380 L) are required to extend through only one valve.

PG-58.3.7 The miscellaneous piping shall include the piping for such items as drains, vents, surface-blow-off, steam and water piping for water columns, gage glasses and pressure gages, and the recirculation return line for a high-temperature water boiler. When a drain is not intended for blowoff purposes (when the boiler is under pressure) a single valve is acceptable, otherwise two valves in series are required except as permitted by PG-58.3.6.

PG-58.3.8 Welded piping in PG-58.3.1, PG-58.3.2, PG-58.3.3, PG-58.3.4, PG-58.3.5, PG-58.3.6, and PG-58.3.7 is also subject to the requirements of PG-104 for proper Code certification.

FIG. PG-59.1 TYPICAL BOILER BUSHINGS

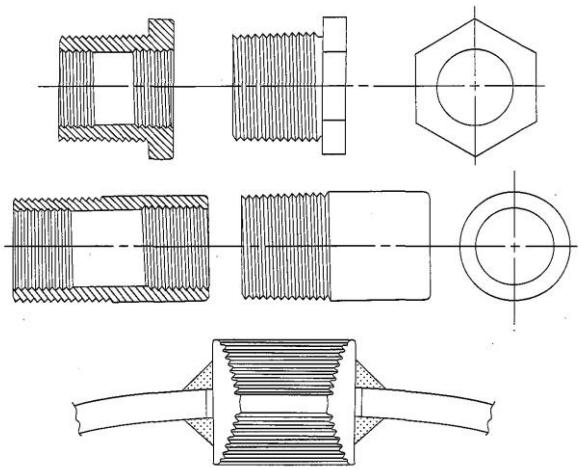

PG-59 APPLICATION REQUIREMENTS FOR THE BOILER PROPER

PG-59.1 Common to Steam, Feedwater, Blowoff, and Drain Systems

PG-59.1.1 Outlets of a boiler to which piping is to be attached for any purpose, and which piping comes within the Code requirements, shall meet the requirements of PG-39 and shall be:

PG-59.1.1.1 A tapped opening.

PG-59.1.1.2 Bolted flanged joints including those of the Van Stone type.

PG-59.1.1.3 Welding ends of the butt or socket welding type.

PG-59.1.1.4 Piping within the boiler proper may be expanded into grooved holes, seal welded if desired. Blowoff piping of firetube boilers shall be attached by threading into a tapped opening with a threaded fitting or valve at the other end if exposed to products of combustion, or by PG-59.1.1.1 or PG-59.1.1.2 if not so exposed (see PFT-49).

PG-59.1.2 Steam Mains. Provisions shall be made for the expansion and contraction of steam mains connected to boilers, by providing substantial anchorage at suitable points, so that there shall be no undue strain transmitted to the boiler. Steam reservoirs shall be used on steam mains when heavy pulsations of the steam currents cause vibration of the boiler shell plates.

PG-59.1.3 Figure PG-59.1 illustrates a typical form of connection for use on boiler shells for passing through piping such as feed, surface blowoff connections, etc., and which permits the pipes' being threaded in solid from both sides in addition to the reinforcing of the opening of the shell. The pipes shall be attached as provided in PG-59.1.1.

In these and other types of boilers where both internal and external pipes making a continuous passage are employed, the boiler bushing or its equivalent shall be used.

PG-59.2 Requirements for Feedwater Connections. The feedwater shall be introduced into a boiler in such a manner that the water will not be discharged directly against surfaces exposed to gases of high temperature or to direct radiation from the fire. For pressures of 400 psi (3 MPa) or over, the feedwater inlet through the drum shall be fitted with shields, sleeves, or other suitable means to reduce the effects of temperature differentials in the shell or head. Feedwater, other than condensate returns as provided for in PG-59.3.6, shall not be introduced through the blowoff.

PG-59.3 Requirements for Blowoffs

PG-59.3.1 A blowoff as required herein is defined as a pipe connection provided with valves located in the external piping through which the water in the boiler may be blown out under pressure, excepting drains such as are used on water columns, gage glasses, or piping to feedwater regulators, etc., used for the purpose of determining the operating condition of such equipment. Piping connections used primarily for continuous operation, such as deconcentrators on continuous blowdown systems, are not classed as blowoffs but the pipe connections and all fittings up to and including the first shutoff valve shall be equal at least to the pressure requirements for the lowest set pressure of any safety valve on the boiler drum and with the corresponding saturated-steam temperature.

PG-59.3.2 A surface blowoff connection shall not exceed NPS 2 ½ (DN 65), and the internal pipe and the terminal connection for the external pipe, when used, shall form a continuous passage, but with clearance between their ends and arranged so that the removal of either will not disturb the other. A properly designed steel bushing, similar to or the equivalent of those shown in Fig. PG-59.1, or a flanged connection shall be used.

PG-59.3.3 Each boiler except forced-flow steam generators with no fixed steam and waterline and high-temperature water boilers shall have a bottom blowoff outlet in direct connection with the lowest water space practicable for external piping conforming to PG-58.3.6.

PG-59.3.4 All waterwalls and water screens that do not drain back into the boiler, and all integral economizers, shall be equipped with outlet connections

for a blowoff or drain line and conform to the requirements of PG-58.3.6 or PG-58.3.7.

PG-59.3.5 Except as permitted for miniature boilers in Part PMB, the minimum size of blowoff connections shall be NPS 1 (DN 25), and the maximum size shall be NPS 2 ½ (DN 65), except that for boilers with 100 ft^2 (9.3 m^2) of heating surface or less, the minimum size of blowoff connections may be NPS ¾ (DN 20).

PG-59.3.6 Condensate return connections of the same size or larger than the size herein specified may be used, and the blowoff may be connected to them. In such case the blowoff shall be so located that the connection may be completely drained.

PG-59.3.7 A bottom blowoff pipe when exposed to direct furnace heat shall be protected by firebrick or other heat resisting material that is so arranged that the pipe may be inspected.

PG-59.3.8 An opening in the boiler setting for a blowoff pipe shall be arranged to provide free expansion and contraction.

PG-59.4 Requirements for Drains

PG-59.4.1 Ample drain connections shall be provided where required to permit complete drainage of all piping, superheaters, waterwalls, water screens, integral economizers, high-temperature water boilers, and all other boiler components in which water may collect. Piping shall conform to the requirements of PG-58.3.6 or PG-58.3.7.

PG-59.4.1.1 Each superheater shall be equipped with at least one drain connection so located as to most effectively provide for the proper operation of the apparatus.

PG-59.4.1.2 Each high-temperature water boiler shall have a bottom drain connection of at least NPS 1 (DN 25) in direct connection with the lowest water space practical for external piping conforming to PG-58.3.7.

PG-59.5 Requirements for Valves and Fittings. The following requirements apply to the use of valves and fittings in the boiler proper.

PG-59.5.1 Steam Stop Valves

PG-59.5.1.1 If a shutoff valve is used between the boiler and its superheater, the safety valve capacity on the boiler shall comply with the requirements of PG-67.2 and PG-70, except as provided for in PG-59.5.1.2, no credit being taken for the safety valve on the superheater, and the superheater must be equipped with safety valve capacity as required by PG-68. A stop valve is not required at the inlet or the outlet of a reheater or separately fired superheater.

PG-59.5.1.2 When stop valves are installed in the water-steam flow path between any two sections of a forced–flow steam generator with no fixed steam and waterline, the safety valves shall satisfy the requirements of PG-67.4.4.

DESIGN AND APPLICATION

PG-60 REQUIREMENTS FOR MISCELLANEOUS PIPE, VALVES, AND FITTINGS

Piping referred to in this paragraph shall be designed in accordance with the applicable requirements of ASME B31.1.

PG-60.1 Water Level Indicators. All boilers having a fixed water level (steam and water interface) shall have at least one gage glass (a transparent device that permits visual determination of the water level). Boilers not having a fixed water level, such as forced-flow steam generators and high-temperature water boilers of the forced circulation type, are not required to have a gage glass. The lowest visible water level in a gage glass shall be at least 2 in. (50 mm) above the lowest permissible water level, as determined by the boiler Manufacturer. Electrode-type electric boilers are required to have only one gage glass, regardless of MAWP.

Gage glasses having multiple tubular sections shall have a minimum of 1 in. (25 mm) overlap of the sections in which the water level may be visible. Segmented gage glasses, such as ported or end-connected strip gages, shall be equipped to provide obvious visual discrimination between water and vapor in the individual sections.

PG-60.1.1 Boilers having a maximum allowable working pressure exceeding 400 psi (3 MPa) shall have two gage glasses. Instead of one of the two required gage glasses, two independent remote water level indicators (two discrete systems that continuously measure, transmit, and display water level) may be provided.

PG-60.1.1.1 When the water level in at least one gage glass is not readily visible to the operator in the area where control actions are initiated, either a fiber optic cable (with no electrical modification of the optical signal) or mirrors shall be provided to transfer the optical image of the water level to the control area. Alternatively, any combination of two of the following shall be provided:

(a) an independent remote water level indicator

(b) an independent continuous transmission and display of an image of the water level in a gage glass.

PG-60.1.1.2 When two independent remote water level indicators are in reliable operation (continuously indicating water level), the one required gage glass may be shut off, but shall be maintained in the serviceable condition.

PG-60.1.1.3 The display of a remote water level indicator shall have a clearly marked minimum water level reference at least 2 in. (50 mm) above the lowest permissible water level, as determined by the Manufacturer.

PG-60.1.6 Each gage glass shall be fitted with a drain cock or valve having an unrestricted drain opening of not less than ¼ in. (6 mm) diameter to facilitate cleaning. When the boiler MAWP exceeds 100 psi (700

kPa), the gage glass shall be furnished with a connection to install a valved drain to a point of safe discharge. Each gage glass shall be equipped with a top and a bottom shutoff valve of such through-flow construction as to prevent stoppage by deposits of sediments. If the bottom valve is more than 7 ft (2 m) above the floor or platform from which it is operated, the operating mechanism shall indicate by its position whether the valve is open or closed. The pressure—temperature rating of valves, fittings, and piping shall be at least equal to the boiler MAWP and the corresponding saturated-steam temperature.

Straight-run globe valves shall not be used on such connections. Automatic shutoff valves, if permitted to be used, shall conform to the requirements given in A-18.

PG-60.2 Water Columns

PG-60.2.1 A water column shall be so mounted that it will be correctly positioned, relative to the normal water level under operating conditions.

PG-60.2.3 Each water column shall be furnished with a connection of at least NPS ¾ (DN 20) to install a valved drain to a safe point of discharge.

PG-60.2.4 The design and material of a water column shall comply with the requirements of PG-8.2, PG-8.3, and PG-42.

PG-60.3 Connections.

PG-60.3.1 Gage glasses that are required by PG-60.1 shall be connected directly to the shell or drum of the boiler or to an intervening water column. When two gage glasses are required, both may be connected to a single water column.

PG-60.3.2 The lower edge of the steam connection between a water column or gage glass in the boiler shall not be below the highest visible water level in the gage glass. There shall be no sag or offset in the piping that will permit the accumulation of water.

PG-60.3.3 The upper edge of the water connection between a water column or gage glass and the boiler shall not be above the lowest visible water level in the gage glass. No part of this pipe connection shall be above the point of connection at the water column.

PG-60.3.4 Connections from the boiler to the water column shall be at least NPS 1 (DN 25). Connections for gage glasses connected directly to the boiler or to an intervening water column shall be at least NPS ½ (DN 15). Connections from the boiler to the remote level indicator shall be at least NPS ¾ (DN 20) to and including the isolation valve and from there to the remote level indicator at least ½ in. (13 mm) O.D. tubing.

PG-60.3.5 When the boiler MAWP exceeds 400 psi (3 MPa), lower connections to drums for water columns and remote level indicators shall be provided with shields, sleeves, or other suitable means to reduce the effect of temperature differentials in the shells or heads.

PG-60.3.6 The steam and water connections to a water column or a gage glass shall be readily accessible for internal inspection and cleaning. Some acceptable methods of meeting this requirement are by providing a cross or fitting with a back outlet at each right-angle turn to permit inspection and cleaning in both directions, or by using pipe bends or fittings of a type that does not leave an internal shoulder or pocket in the pipe connection and with a radius of curvature that will permit the passage of a rotary cleaner. Screwed plug closures using threaded connections as allowed by PG-39.5.3 are acceptable means of access for this inspection and cleaning. When the boiler MAWP exceeds 400 psig (3 MPa), socket-welded plugs may be used for this purpose in lieu of screwed plugs. If the water connection to the water column has a rising bend or pocket that cannot be drained by means of the water-column drain, an additional drain shall be placed on this connection so that it may be blown off to clear any sediment from the pipe.

FIG. PG-60.3.7 Y-TYPE GLOBE VALVE

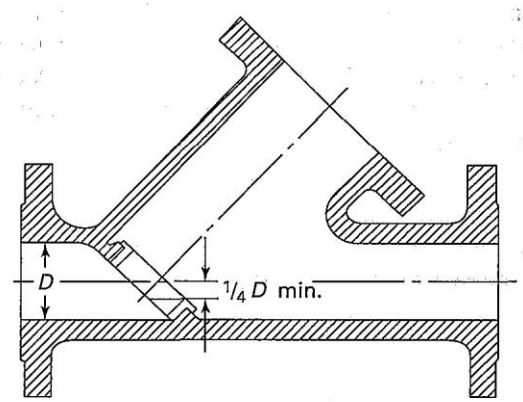

PG-60.3.7 Shutoff valves, if provided in the pipe connections between a boiler and a water column or between a boiler and the shutoff valves required for the gage glass (PG-60.1.6), shall be of such through-flow construction as to prevent stoppage by deposits of sediment and shall indicate whether they are in open or closed position of the operating mechanism.

Some examples of acceptable valves are:

(a) outside-screw-and-yoke type gate valve

(b) lever-lifting-type gate valve with permanently fastened lever

(c) stopcock with the plug held in place by a guard or gland

(d) ball valve

Such valves shall be locked or sealed open except under the following additional conditions:

(1) The boiler MAWP shall not exceed 250 psig (1.7 MPa).

(2) The boiler shall not be hand fired or fired with solid fuel not in suspension.

(3) Interlocks between the valve and the burner control system shall stop fuel supply and prevent firing whenever the valve between the drum and the water column is not in the fully open position.

(4) The minimum valve size shall be NPS 1 (DN 25).

PG-60.3.8 Except for control devices such as damper regulators and feedwater regulators, drains, steam pressure gages, or apparatus of such form as does not permit the escape of an appreciable amount of steam or water therefrom, no outlet connections shall be placed on the piping connecting a water column or gage glass to a boiler. No outlet connections shall be placed on the piping connecting a remote level indicator to the boiler or to a water column for any function other than water level indication.

PG-60.3.9 An acceptable arrangement is shown in Fig. PG-60.3.9

FIG. PG-60.3.9 TYPICAL ARRANGEMENT OF STEAM AND WATER CONNECTIONS FOR A WATER COLUMN

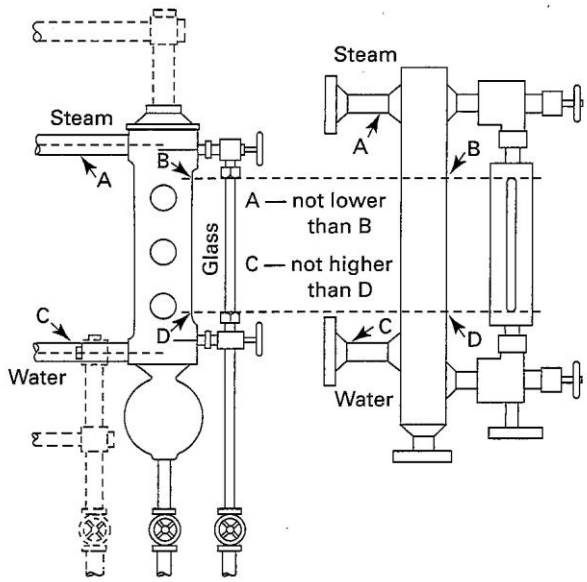

PG-60.4 Gage Cocks. Not required.

PG-60.5 Water Fronts. Each boiler fitted with a water jacketed boiler-furnace mouth protector, or similar appliance having valves on the pipes connecting them to the boiler shall have these valves locked or sealed open. Such valves, when used, shall be of the straightway type.

PG-60.6 Pressure Gages

PG-60.6.1 Each boiler shall have a pressure gage so located that it is easily readable. The pressure gage shall be installed so that it shall at all times indicate the pressure in the boiler. Each steam boiler shall have the pressure gage connected to the steam space or to the water column or its steam connection. A valve or cock shall be placed in the gage connection adjacent to the gage. An additional valve or cock may be located near the boiler providing it is locked or sealed in the open position. No other shutoff valves shall be located between the gage and the boiler. The pipe connection shall be of ample size and arranged so that it may be cleared by blowing out. For a steam boiler the gage or connection shall contain a syphon or equivalent device that will develop and maintain a water seal that will prevent steam from entering the gage tube. Pressure gage connections shall be suitable for the maximum allowable working pressure and temperature, but if the temperature exceeds 406°F (208°C), brass or copper pipe or tubing shall not be used. The connections to the boiler, except the syphon, if used, shall not be less than NPS ¼ (DN 8) but where steel or wrought iron pipe or tubing is used, they shall not be less than ½ in. (13 mm) inside diameter. The minimum size of a syphon, if used, shall be ¼ in. (6 mm) inside diameter. The dial of the pressure gage shall be graduated to approximately double the pressure at which the safety valve is set, but in no case to less than 1 ½ times this pressure.

PG-60.6.2 Each forced-flow steam generator with no fixed steam and waterline shall be equipped with pressure gages or other pressure measuring devices located as follows:

PG-60.6.2.1 At the boiler or superheater outlet (following the last section which involves absorption of heat), and

PG-60.6.2.2 At the boiler or economizer inlet (preceding any section that involves absorption of heat), and

PG-60.6.2.3 Upstream of any shutoff valve that may be used between any two sections of the heat absorbing surface.

PG-60.6.3 Each boiler shall be provided with a valve connection at least NPS ¼ (DN 8) for the exclusive purpose of attaching a test gage when the boiler is in service, so that the accuracy of the boiler pressure gage can be ascertained.

PG-60.6.4 Each high-temperature water boiler shall have a temperature gage so located and connected that it shall be easily readable. The temperature gage shall be installed so that it at all times indicates the temperature in degrees Fahrenheit (Celsius) of the water in the boiler, at or near the outlet connection.

PG-61 FEEDWATER SUPPLY

PG-61.1 Except as provided for in PG-61.2 and PG-61.4, boilers having more than 500 ft^2 (47 m^2) of water-heating surface shall have at least two means of feeding water. Except as provided for in PG-61.3, PG-61.4, and PG-61.5, each source of feeding shall be capable of supplying water to the boiler at a pressure of 3% higher than the highest setting of any safety valve on the boiler. For boilers that are fired with solid fuel not in suspension, and for boilers whose setting or heat source can continue to supply sufficient heat to cause damage to the boiler if the feed supply is interrupted, one such means of feeding shall not be susceptible to the same interruption as the other, and each shall provide sufficient water to prevent damage to the boiler.

PG-61.2 Except as provided for in PG-61.1, a boiler fired by gaseous, liquid, or solid fuel in suspension, or heated by combustion turbine engine exhaust, may be equipped with a single means of feeding water, provided

means are furnished for the shutting off of its heat input prior to the water level reaching the lowest permissible level established by PG-60.

PG-61.3 For boilers having a water-heating surface of not more than 100 ft^2 (9.3 m^2) the feed connection to the boiler shall not be smaller than NPS ½ (DN 15). For boilers having a water-heating surface more than 100 ft^2 (9.3 m^2) the feed connection to the boiler shall not be less than NPS ¾ (DN 20).

PG-61.4 High-temperature water boilers shall be provided with means of adding water to the boiler or system while under pressure.

PG-61.5 A forced-flow steam generator with no fixed steam and waterline shall be provided with a source of feeding capable of supplying water to the boiler at a pressure not less than the expected maximum sustained pressure at the boiler inlet, as determined by the boiler Manufacturer, corresponding to operation at maximum designed steaming capacity with maximum allowable working pressure at the superheater outlet.

OVERPRESSURE PROTECTION REQUIREMENTS

PG-67 BOILER

PG-67.1 Each boiler shall have at least one pressure relief valve and if it has more than 500 ft^2 (47 m^2) of bare tube water-heating surface, or if an electric boiler has a power input more than 1,100 kW, it shall have two or more pressure relief valves. For a boiler with combined bare tube and extended water-heating surface exceeding 500 ft^2 (47 m^2), two or more pressure relief valves are required only if the design steam generating capacity of the boiler exceeds 4,000 lb/hr (1 800 kg/hr). Organic fluid vaporizer generators require special consideration as given in Part PVG.

PG-67.2 The pressure relief valve capacity for each boiler (except as noted in PG-67.4) shall be such that the pressure relief valve, or valves will discharge all the steam that can be generated by the boiler without allowing the pressure to rise more than 6% above the highest pressure at which any valve is set and in no case to more than 6% above the maximum allowable working pressure.

PG-67.2.1 The minimum required relieving capacity of the pressure relief valves for all types of boilers shall be not less than the maximum designed steaming capacity at the MAWP of the boiler, as determined by the Manufacturer and shall be based on the capacity of all the fuel burning equipment as limited by other boiler functions.

PG-67.2.2 The minimum required relieving capacity for a waste heat boiler shall be determined by the Manufacturer. When auxiliary firing is to be used in combination with waste heat recovery, the maximum output as determined by the boiler Manufacturer shall include the effect of such firing in the total required capacity. When auxiliary firing is' to be used in place of waste heat recovery, the minimum required relieving capacity shall be based on auxiliary firing or waste heat recovery, whichever is higher.

PG-67.2.3 The minimum required relieving capacity for electric boilers shall be in accordance with PEB-15.

PG-67.2.4 The minimum required relieving capacity in lb/hr (kg/hr) for a high-temperature water boiler shall be determined by dividing the maximum output in Btu/hr (W) at the boiler nozzle, produced by the highest heating value fuel for which the boiler is designed, by 1,000 (646).

PG-67.2.5 The minimum required relieving capacity for organic fluid vaporizers shall be in accordance with PVG-12. The minimum required relieving capacity for miniature boilers shall be in accordance with PMB-15.

PG-67.2.6 Any economizer that may be shut off from the boiler, thereby permitting the economizer to become a fired pressure vessel, shall have one or more pressure relief valves with a total discharge capacity, in lb/hr (kg/hr), calculated from the maximum expected heat absorption in Btu/hr (W), as determined by the Manufacturer, divided by 1,000 (646). This absorption s shall be stated in the stamping (PG-106.4). For overpressure conditions where the fluid relieved is water, the discharge capacity of the pressure relief valve, or valves shall be sufficient to prevent the pressure from exceeding the limits of PG-67.2.

PG-67.2.7 The steam generated when all pressure relief valves are relieving at full lift on a boiler that has a steam-generating surface located downstream in the gas stream of a superheater and/or reheater surface may exceed the maximum designed steaming capacity at the MA WP of the boiler. The Manufacturer shall address this by one of the following methods:

PG-67.2.7.1 The minimum required relieving capacity of the pressure relief valves shall not be less than the steam that may be generated with all pressure relief valves relieving at full lift. For boilers that use auxiliary firing in combination with the primary heat source, the Manufacturer shall include the effect of such firing in the total required capacity.

PG-67.2.7.2 The minimum required relieving capacity of the pressure relief valves shall not be less than the maximum designed steaming capacity at the MAWP of the boiler, and the boiler shall be provided with controls responsive to steam pressure, which include not less than the following:

(a) a control that reduces that total heat input to the boiler such that the steam generated does not exceed the maximum designed steaming capacity at the MAWP of the boiler

(b) a control that trips the heat input to the boiler if the pressure reaches 106% of the MAWP of the boiler

PG-67.3 One or more pressure relief valves on the boiler proper shall be set at or below the maximum allowable working pressure (except as noted in PG-67.4). If additional valves are used the highest pressure setting shall not exceed the maximum allowable working pressure by more than 3%. The complete range of pressure settings of all the saturated-steam pressure relief valves on a boiler shall not exceed 10% of the highest pressure to which any valve is set. Pressure setting of pressure relief valves on high-temperature water boilers[8] may exceed this 10% range. Economizer pressure relief devices required by PG-67.2.6 shall be set as above using the MAWP of the economizer.

FIG. PG-67.4 REQUIREMENTS FOR OVERPRESSURE PROTECTION FORCED-FLOW STEAM GENERATOR

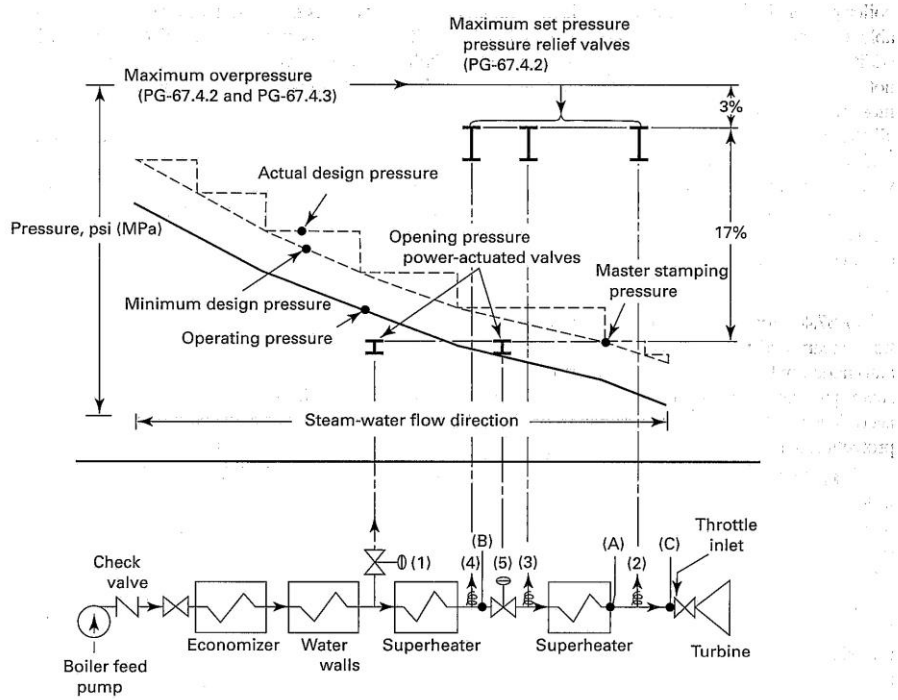

Pressure
(A) = master stamping (PG-106.3)
(B) = component design at inlet to stop valve (5) (PG-67.4.4.1)
(C) = turbine throttle inlet (ASME B31.1, para. 122.1.2, A.4)

Pressure Relief and Power-Actuated Valves
(1) = power actuated (PG-67.4.1)
(2), (3), and (4) = pressure relief valve (PG-67.4.2)
(5) = superheater stop (PG-67.4.4)

Pressure Relief Valve Flow Capacity (minimum, based on rated capacity of boiler)
(1) = 10% – 30% (PG-67.4.1)
(2) = minimum of one valve (PG-68.1)
(2) + (3) when downstream to stop valve (5) = that required for independently fired superheaters (PG-68.3)
(2) + (3) + (4) = 100% – (1) (PG-67.4.2)

Pressure Relief Valve Opening Pressure (maximum)
(1) = (A), and (B) when there is stop valve (5) (PG-67.4.1)
(2), (3), and (4) = (A) + 17% (PG-67.4.2)
(5) = (A) (PG-67.4.1)

Alternate Requirements for Pressure Relief Valves

Pressure Relief Valve Flow Capacity (minimum, based on rated capacity of boiler)
(1) = 10% – 30% (PG-67.4.1)
(2) = one valve minimum (PG-68.1)
(2) + (3) when downstream to stop valve (5) = that required for independently fired superheaters (PG-68.3)
(4) = 10% total with minimum of two valves when there is a stop valve (5) (PG-67.5.3.3)
(2) + (4) = 10% with minimum of two valves when there is no stop valve (5) (PG-67.4.3.3)

Pressure Relief Valve Opening Pressure (maximum)
(1) = (A), and (B) when there is stop valve (5) (PG-67.4.1)
(2), (3), and (4) = (A) + 20% (PG-67.4.3.3)
(5) = (A) (PG-67.4.1)

Automatic Pressure Controls (PG-67.4.3)
(a) at (C) for normal operation under load (PG-67.4.3.2.1)
(b) at (A) + 10% to overide control (a) (PG-67.4.3.2.2)
(c) at (A) + 20% to shut off flow of fuel and feedwater (PG-67.4.3.2.3)
(d) pressure relief valves at (4) to shut off flow of fuel and feedwater by "fail-safe" power circuit (PG-67.4.3.4)

[8] Pressure relief valves in hot water service are more susceptible to damage and subsequent leakage, than pressure relief valves relieving steam. It is recommended that the maximum allowable working pressure of the boiler and the pressure relief valve setting for high-temperature water boilers be selected substantially higher than the desired operating pressure so as to minimize the times the pressure relief valve must lift.

PG-67.4 For a forced-flow steam generator with no fixed steam and waterline (Fig. PG-6704), equipped with automatic controls and protective interlocks responsive to steam pressure, pressure relief valves may be provided in accordance with the above paragraphs or the following protection against overpressure shall be provided:

PG-67.4.1 One or more power-actuated pressure relieving valves[9] shall be provided in direct communication with the boiler when the boiler is under pressure and shall receive a control impulse to open when the maximum allowable working pressure at the superheater outlet, as shown in the master stamping (PG-106.3), is exceeded. The total combined relieving capacity of the power-actuated relieving valves shall be not less than 10% of the maximum design steaming capacity of the boiler under any operating condition as determined by the Manufacturer. The valve or valves shall be located in the pressure part system where they will relieve the overpressure.

An isolating stop valve of the outside-screw-and-yoke or ball type may be installed between the power-actuated pressure relieving valve and the boiler to permit repairs provided an alternate power-actuated pressure relieving valve of the same capacity is so installed as to be in direct communication with the boiler in accordance with the requirements of this paragraph.

The isolating stop valve port area shall at least equal the area of the inlet of the power-actuated pressure relieving valve. If the isolating stop valve is of the ball type, the valve shall include a means to clearly identify whether the valve is in the open or closed position. If the isolating stop valve is power actuated (air, motor, hydraulic, etc.), a manual override mechanism shall be provided.

Power-actuated pressure relieving valves discharging to intermediate pressure and incorporated into bypass and/or startup circuits by the boiler Manufacturer need not be capacity certified. Instead, they shall be marked by the valve manufacturer with a capacity rating at a set of specified inlet pressure and temperature conditions. Power-actuated pressure relieving valves discharging directly to atmosphere shall be capacity certified. This capacity certification shall be conducted in accordance with the provisions of PG-69.3. The valves shall be marked in accordance with the provisions of PG-69.4.

[9] The power-actuated pressure relieving valve is one whose movements to open or close are fully controlled by a source of power (electricity, air, steam, or hydraulic). The valve may discharge to atmosphere or to a container at lower pressure. The discharge capacity may be affected by the downstream conditions, and such effects shall be taken into account. If the power-actuated pressure relieving valves are also positioned in response to other control signals, the control impulse to prevent overpressure shall be responsive only to pressure and shall override any other control function.

PG-67.4.2 Pressure relief valves shall be provided, having a total combined relieving capacity, including that of the power-actuated pressure relieving capacity installed under PG-67.4.l, of not less than 100% of the maximum designed steaming capacity of the boiler, as determined by the Manufacturer, except the alternate provisions of PG-67.4.3 are satisfied. In this total, no credit in excess of 30% of the total required relieving capacity shall be allowed for the power-actuated pressure relieving valves actually installed. Any or all of the pressure relief valves may be set above the maximum allowable working pressure of the parts to which they are connected, but the set pressures shall be such that when all of these valves (together with the power-actuated pressure relieving valves) are in operation the pressure will not rise more than 20% above the maximum allowable working pressure of any part of the boiler, except for the steam piping between the boiler and the prime mover.

PG-67.4.3 The total installed capacity of spring loaded safety valves may be less than the requirements of PG-67.4.2 provided all of the following conditions are met.

PG-67.4.3.1 The boiler shall be of no less steaming capacity than 1,000,000 lb/hr (450 000 kg/hr) and installed in a unit system for power generation (i.e., a single boiler supplying a single turbine-generator unit).

PG-67.4.3.2 The boiler shall be provided with automatic devices, responsive to variations in steam pressure, which include not less than all the following:

PG-67.4.3.2.1 A control capable of maintaining steam pressure at the desired operating level and of modulating firing rates and feedwater flow in proportion to a variable steam output.

PG-67.4.3.2.2 A control that overrides PG-67.4.3.2.1 by reducing the fuel rate and feedwater flow when the steam pressure exceeds the maximum allowable working pressure as shown in the master stamping (PG-106.3) by 10%; and

PG-67.4.3.2.3 A direct-acting overpressure-trip-actuating mechanism, using an independent pressure sensing device, that will stop the flow of fuel and feedwater to the boiler, at a pressure higher than the set pressure of PG-67.4.3.2.2, but less than 20% above the maximum allowable working pressure as shown in the master stamping (PG-106.3).

PG-67.4.3.3 There shall be not less than two pressure relief valves and the total rated relieving capacity of the pressure relief valves shall be not less than 10% of the maximum designed steaming capacity of the boiler as determined by the Manufacturer. These pressure relief valves may be set above the maximum allowable working pressure of the parts to which they are connected but shall be set such that the valves will lift at a pressure no higher than 20% above the maximum allowable working pressure as shown in the master stamping (PG-106.3).

PG-67.4.3.4 At least two of these pressure relief valves shall be equipped with a device that directly transmits the valve stem lift action to controls that will stop the flow of fuel and feedwater to the boiler. The control circuitry to accomplish this shall be arranged in a "fail-safe" manner (see Note).

NOTE: "Fail-safe" shall mean a circuitry arranged as either of the following:

(a)*Energize to trip:* There shall be at least two separate and independent trip circuits served by two power sources, to initiate and perform the trip action. One power source shall be a continuously charged DC battery. The second source shall be an AC-to-DC converter connected to the DC system to charge the battery and capable of performing the trip action. The trip circuits shall be continuously monitored for availability.

It is not mandatory to duplicate the mechanism that actually stops the flow of fuel and feedwater.

(b) *De-energize to trip:* If the circuits are arranged in such a way that a continuous supply of power is required to keep the circuits closed and operating and such that any interruption of power supply will actuate the trip mechanism, then a single trip circuit and single power supply will be enough to meet the requirements of this subparagraph.

PG-67.4.3.5 The power supply for all controls and devices required by PG-67.4.3 shall include at least one source contained within the same plant as the boiler and which is arranged to actuate the controls and devices continuously in the event of failure or interruption of any other power sources.

PG-67.4.4 When stop valves are installed in the water-steam flow path between any two sections of a forced-flow steam generator with no fixed steam and waterline:

PG-67.4.4.1 The power-actuated pressure relieving valve(s) required by PG-67.4.1 shall also receive a control impulse to open when the maximum allowable working pressure of the component, having the lowest pressure upstream to the stop valve, is exceeded; and

PG-67.4.4.2 The pressure relief valves shall be located to provide the pressure protection requirements in PG-67.4.2 or PG-67.4.3.

PG-67.4.5 A reliable pressure-recording device shall always be in service and records kept to provide evidence of conformity to the above requirements.

PG-67.5 The coefficient of discharge of pressure relief valves shall be determined by actual steam flow measurements at a pressure not more than 3 % above the pressure at which the valve is set to relieve and when adjusted for blowdown in accordance with PG-69.1.4. The valves shall be credited with capacities as determined by the provisions of PG-69.2.

Pressure relief valves may be used that give any opening up to the full discharge capacity of the area of the opening of the inlet of the valve, provided the movement of a steam pressure relief valve is such as not to induce lifting of water in the boiler.

For high-temperature water boilers pressure relief valves shall be used. Such valves shall have a closed bonnet. In addition the pressure relief valves shall be capable of satisfactory operation when relieving water at the saturation temperature corresponding to the pressure at which the valve is set to blow.

PG-68 SUPERHEATER AND REHEATER

PG-68.1 Except as permitted in PG-58.3.1, every attached superheater shall have one or more pressure relief valves in the steam flow path between the superheater outlet and the first stop valve. The location shall be suitable for the service intended and shall provide the overpressure protection required. The pressure drop upstream of each pressure relief valve shall be considered in the determination of set pressure and relieving capacity of that valve. If the superheater outlet header has a full, free steam passage from end to end and is so constructed that steam is supplied to it at practically equal intervals throughout its length so that there is a uniform flow of steam through the superheater tubes and the header, the pressure relief valve, or valves, may be located anywhere in the length of the header.

PG-68.2 The discharge capacity of the pressure relief valve, or valves, on an attached superheater may be included in determining the number and size of the pressure relief valves for the boiler, provided there are no intervening valves between the superheater pressure relief valve and the boiler, and provided the discharge capacity of the pressure relief valve, or valves, on the boiler, as distinct from the superheater is at least 75% of the aggregate valve capacity required.

PG-68.3 Every isolable superheater that may be shut off from the boiler and permit the superheater to become a fired pressure vessel and all nonintegral separately fired superheaters shall have one or more pressure relief valves having a discharge capacity equal to 6 lb/ft^2 (29 kg/m^2) of steam per hour, using the superheater surface measured on the side exposed to the hot gases. As an alternative the Manufacturer may also calculate the minimum pressure relief valve discharge capacity in lb (kg) of steam per hour from the maximum expected heat absorption (as determined by the Manufacturer) in Btu/hr (W), divided by 1,000 (646). In the case of electrically heated superheaters, the pressure relief valve capacity shall be based upon 3 ½ lb (1.6 kg)/hr/kW input. The number of pressure relief valves installed shall be such that the total capacity is at least equal to that required. Pressure relief valves for separately fired superheaters shall be located in accordance with the rules of PG-68.1 and the mounting rules of PG-71.

PG-68.4 Every reheater shall have one or more pressure relief valves, such that the total relieving capacity is at least equal to the maximum steam flow for which the heater is designed. The capacity of the reheater pressure relief valves shall not be included in the required relieving capacity for the boiler and superheater.

One or more pressure relief valves with a combined relieving capacity not less than 15% of the required total shall be located along the steam flow path between the reheater outlet and the first stop valve. The pressure drop upstream of the pressure relief valves on the outlet side of the reheater shall be considered in determining their set pressure.

PG-68.5 A soot blower connection may be attached to the same outlet from the superheater or reheater that is used for the pressure relief valve connection.

PG-68.6 Every pressure relief valve used on a superheater or reheater discharging superheated steam at a temperature over 4500P (230°C) shall have a casing, including the base, body, and, if applicable, bonnet and spindle, of steel, steel alloy, or equivalent heat-resisting material.

The pressure relief valve shall have a flanged inlet connection, or a weld-end inlet connection. It shall have the seat and disk of suitable heat erosive and corrosive resisting material, and the spring of direct spring-loaded safety valves shall be fully exposed outside of the valve casing so that it shall be protected from contact with the escaping steam.

PG-68.7 The capacity of a pressure relief valve on superheated steam shall be calculated by multiplying the capacity determined in accordance with PG-69.2 by the appropriate superheat correction factor K_{sh}, from Table PG-68.7.

TABLE PG-68.7
SUPERHEAT CORRECTION FACTOR, K_{sh}

Flowing Pressure (psia)	Superheat Correction Factor, K_{sh}, Total Temperature, °F, of Superheated Steam																
	400	450	500	550	600	650	700	750	800	850	900	950	1000	1050	1100	1150	1200
50	0.987	0.957	0.930	0.905	0.882	0.861	0.841	0.823	0.805	0.789	0.774	0.759	0.745	0.732	0.719	0.708	0.696
100	0.998	0.963	0.935	0.909	0.885	0.864	0.843	0.825	0.807	0.790	0.775	0.760	0.746	0.733	0.720	0.708	0.697
150	0.984	0.970	0.940	0.913	0.888	0.866	0.846	0.826	0.808	0.792	0.776	0.761	0.747	0.733	0.721	0.709	0.697
200	0.979	0.977	0.945	0.917	0.892	0.869	0.848	0.828	0.810	0.793	0.777	0.762	0.748	0.734	0.721	0.709	0.698
250	...	0.972	0.951	0.921	0.895	0.871	0.850	0.830	0.812	0.794	0.778	0.763	0.749	0.735	0.722	0.710	0.698
300	...	0.968	0.957	0.926	0.898	0.874	0.852	0.832	0.813	0.796	0.780	0.764	0.750	0.736	0.723	0.710	0.699
350	...	0.968	0.963	0.930	0.902	0.877	0.854	0.834	0.815	0.797	0.781	0.765	0.750	0.736	0.723	0.711	0.699
400	...	...	0.963	0.935	0.906	0.880	0.857	0.836	0.816	0.798	0.782	0.766	0.751	0.737	0.724	0.712	0.700
450	...	...	0.961	0.940	0.909	0.883	0.859	0.838	0.818	0.800	0.783	0.767	0.752	0.738	0.725	0.712	0.700
500	...	...	0.961	0.946	0.914	0.886	0.862	0.840	0.820	0.801	0.784	0.768	0.753	0.739	0.725	0.713	0.701
550	...	...	0.962	0.952	0.918	0.889	0.864	0.842	0.822	0.803	0.785	0.769	0.754	0.740	0.726	0.713	0.701
600	...	...	0.964	0.958	0.922	0.892	0.867	0.844	0.823	0.804	0.787	0.770	0.755	0.740	0.727	0.714	0.702
650	...	...	0.968	0.958	0.927	0.896	0.869	0.846	0.825	0.806	0.788	0.771	0.756	0.741	0.728	0.715	0.702
700	...	...	...	0.958	0.931	0.899	0.872	0.848	0.827	0.807	0.789	0.772	0.757	0.742	0.728	0.715	0.703
750	...	...	...	0.958	0.936	0.903	0.875	0.850	0.828	0.809	0.790	0.774	0.758	0.743	0.729	0.716	0.703
800	...	...	...	0.960	0.942	0.906	0.878	0.852	0.830	0.810	0.792	0.774	0.759	0.744	0.730	0.716	0.704
850	...	...	...	0.962	0.947	0.910	0.880	0.855	0.832	0.812	0.793	0.776	0.760	0.744	0.730	0.717	0.704
900	...	...	...	0.965	0.953	0.914	0.883	0.857	0.834	0.813	0.794	0.777	0.760	0.745	0.731	0.718	0.705
950	...	...	...	0.969	0.958	0.918	0.886	0.860	0.836	0.815	0.796	0.778	0.761	0.746	0.732	0.718	0.705
1000	...	...	...	0.974	0.959	0.923	0.890	0.862	0.838	0.816	0.797	0.779	0.762	0.747	0.732	0.719	0.706
1050	...	...	...	...	0.960	0.927	0.893	0.864	0.840	0.818	0.798	0.780	0.763	0.748	0.733	0.719	0.707
1100	...	...	...	...	0.962	0.931	0.896	0.867	0.842	0.820	0.800	0.781	0.764	0.749	0.734	0.720	0.707
1150	...	...	...	...	0.964	0.936	0.899	0.870	0.844	0.821	0.801	0.782	0.765	0.749	0.735	0.721	0.708
1200	...	...	...	...	0.966	0.941	0.903	0.872	0.846	0.823	0.802	0.784	0.766	0.750	0.735	0.721	0.708
1250	...	...	...	...	0.969	0.946	0.906	0.875	0.848	0.825	0.804	0.785	0.767	0.751	0.736	0.722	0.709
1300	...	...	...	...	0.973	0.952	0.910	0.878	0.850	0.826	0.805	0.786	0.768	0.752	0.737	0.723	0.709
1350	...	...	...	...	0.977	0.958	0.914	0.880	0.852	0.828	0.807	0.787	0.769	0.753	0.737	0.723	0.710
1400	...	...	...	...	0.982	0.963	0.918	0.883	0.854	0.830	0.808	0.788	0.770	0.754	0.738	0.724	0.710
1450	...	...	...	...	0.987	0.968	0.922	0.886	0.857	0.832	0.809	0.790	0.771	0.754	0.739	0.724	0.711
1500	...	...	...	...	0.993	0.970	0.926	0.889	0.859	0.833	0.811	0.791	0.772	0.755	0.740	0.725	0.711
1550	...	...	...	...	...	0.972	0.930	0.892	0.861	0.835	0.812	0.792	0.773	0.756	0.740	0.726	0.712
1600	...	...	...	...	...	0.973	0.934	0.894	0.863	0.836	0.813	0.792	0.774	0.756	0.740	0.726	0.712
1650	...	...	...	...	...	0.973	0.936	0.895	0.863	0.836	0.812	0.791	0.772	0.755	0.739	0.724	0.710
1700	...	...	...	...	...	0.973	0.938	0.895	0.863	0.835	0.811	0.790	0.771	0.754	0.738	0.723	0.709
1750	...	...	...	...	...	0.974	0.940	0.896	0.862	0.835	0.810	0.789	0.770	0.752	0.736	0.721	0.707
1800	...	...	...	...	...	0.975	0.942	0.897	0.862	0.834	0.810	0.788	0.768	0.751	0.735	0.720	0.705
1850	...	...	...	...	...	0.976	0.944	0.897	0.862	0.833	0.809	0.787	0.767	0.749	0.733	0.718	0.704
1900	...	...	...	...	...	0.977	0.946	0.898	0.862	0.832	0.807	0.785	0.766	0.748	0.731	0.716	0.702
1950	...	...	...	...	...	0.979	0.949	0.898	0.861	0.832	0.806	0.784	0.764	0.746	0.729	0.714	0.700
2000	...	...	...	...	...	0.982	0.952	0.899	0.861	0.831	0.805	0.782	0.762	0.744	0.728	0.712	0.698
2050	...	...	...	...	...	0.985	0.954	0.899	0.860	0.830	0.804	0.781	0.761	0.742	0.726	0.710	0.696
2100	...	...	...	...	...	0.988	0.956	0.900	0.860	0.828	0.802	0.779	0.759	0.740	0.724	0.708	0.694
2150	...	...	...	...	...	...	0.956	0.900	0.859	0.827	0.801	0.778	0.757	0.738	0.722	0.706	0.692
2200	...	...	...	...	...	...	0.955	0.901	0.859	0.826	0.799	0.776	0.755	0.736	0.720	0.704	0.690
2250	...	...	...	...	...	...	0.954	0.901	0.858	0.825	0.797	0.774	0.753	0.734	0.717	0.702	0.687
2300	...	...	...	...	...	...	0.953	0.901	0.857	0.823	0.795	0.772	0.751	0.732	0.715	0.699	0.685
2350	...	...	...	...	...	...	0.952	0.902	0.856	0.822	0.794	0.769	0.748	0.729	0.712	0.697	0.682
2400	...	...	...	...	...	...	0.952	0.902	0.855	0.820	0.791	0.767	0.746	0.727	0.710	0.694	0.679
2450	...	...	...	...	...	...	0.951	0.902	0.854	0.818	0.789	0.765	0.743	0.724	0.707	0.691	0.677
2500	...	...	...	...	...	...	0.951	0.902	0.852	0.816	0.787	0.762	0.740	0.721	0.704	0.688	0.674
2550	...	...	...	...	...	...	0.951	0.902	0.851	0.814	0.784	0.759	0.738	0.718	0.701	0.685	0.671
2600	...	...	...	...	...	...	0.951	0.903	0.849	0.812	0.782	0.756	0.735	0.715	0.698	0.682	0.664
2650	...	...	...	...	...	...	0.952	0.903	0.848	0.809	0.779	0.754	0.731	0.712	0.695	0.679	0.664
2700	...	...	...	...	...	...	0.952	0.903	0.846	0.807	0.776	0.750	0.728	0.708	0.691	0.675	0.661
2750	...	...	...	...	...	...	0.953	0.903	0.844	0.804	0.773	0.747	0.724	0.705	0.687	0.671	0.657
2800	...	...	...	...	...	...	0.956	0.903	0.842	0.801	0.769	0.743	0.721	0.701	0.684	0.668	0.653
2850	...	...	...	...	...	...	0.959	0.902	0.839	0.798	0.766	0.739	0.717	0.697	0.679	0.663	0.649
2900	...	...	...	...	...	...	0.963	0.902	0.836	0.794	0.762	0.735	0.713	0.693	0.675	0.659	0.645
2950	...	...	...	...	...	...	...	0.902	0.834	0.790	0.758	0.731	0.708	0.688	0.671	0.655	0.640
3000	...	...	...	...	...	...	...	0.901	0.831	0.786	0.753	0.726	0.704	0.684	0.666	0.650	0.635
3050	...	...	...	...	...	...	...	0.899	0.827	0.782	0.749	0.722	0.699	0.679	0.661	0.645	0.630
3100	...	...	...	...	...	...	...	0.896	0.823	0.777	0.744	0.716	0.693	0.673	0.656	0.640	0.625
3150	...	...	...	...	...	...	...	0.894	0.819	0.772	0.738	0.711	0.688	0.668	0.650	0.634	0.620
3200	...	...	...	...	...	...	...	0.889	0.815	0.767	0.733	0.705	0.682	0.662	0.644	0.628	0.614