Clearinghouse Rule 15-043

STATE OF WISCONSIN
Department of Safety and Professional Services

IN THE MATTER OF RULEMAKING PROCEEDINGS BEFORE THE DEPARTMENT OF SAFETY AND PROFESSIONAL SERVICES	:	PROPOSED ORDER OF THE DEPARTMENT OF SAFETY AND PROFESSIONAL SERVICES ADOPTING RULES (CLEARINGHOUSE RULE)

PROPOSED ORDER

An order of the Department of Safety and Professional Services to renumber Chapters SPS 320 – 325 Appendix;

to renumber and amend SPS 321.225 (intro.) and (1) to (6), and 324.01;

to amend SPS 320.04 (6) (d) (Note), 320.09 (1) (Note) [1] and (9) (c) (Note), 320.19 (1) (b) (Note) and (2) (c) (Note), 321.02 (1) (d) (Note) and (3) (b) 2., 321.03 (1) (e) (Note), 321.04 (3) (b) 5. c. (Note), 321.125 (3) (c) (Note) and (6) (b) (Note), 321.16 (2) (c) 3. (Note), 321.17 (3) (e) (Note) [2], 321.18 (1) (d) c., 321.22 (1) (a) (Note), (3) (a) Table 321.22-A2 (Footnote) [2] and (6) (b) 3. c., 321.25 (1) (Note) [1], 321.25 Figure 321.25-A, (8) (d) 1. and (8) (d) 2., 321.27 (1) (b), (2) (Note) and (5) (b) (Note), and 321.40 (1) (h) (Note);

and to create SPS 321.225 (2), 321.24 (3) (d) 8. and (Note), 324.01 (2) and (Note), and Chapters 320 to 325 Appendix B, relating to one- and two-family dwellings.

Analysis prepared by the Department of Safety and Professional Services.

ANALYSIS

Statutes interpreted:

Sections 101.63 (intro.) and (1) (intro.) and (5).

Statutory authority:

Sections 227.11 (2) (a) and 101.63 (intro.) and (1) (intro.).

Explanation of agency authority:

Section 227.11 (2) (a) of the Statutes authorizes the Department to promulgate rules interpreting any statute that is enforced or administered by the Department, if the rule is considered necessary to effectuate the purpose of the statute.

Sections 101.63 (intro.) and (1) (intro.) require the Department to adopt rules which establish standards for the construction and inspection of one- and two-family dwellings and components thereof. No set of rules may be adopted that has not taken into account the costs of specific code provisions to home buyers in relationship to the benefits derived from the provisions.

Related statute or rule:

Various other statutes and rules promulgated by the Department address construction and inspection of dwellings, public buildings and places of employment.

Plain language analysis:

These rules provide prescriptive deck standards which explain, in laymens terms, how to build an outdoor deck for one- and two-family dwellings. The bulk of these rules will form an appendix to the Uniform Dwelling Code (UDC). These standards do not impose new restrictions beyond the current UDC requirements and do not preclude the use of different deck materials and methods than those prescribed in these rules, as long as the deck meets the provisions of the UDC.

Summary of, and comparison with, existing or proposed federal regulation:

An Internet-based search of the *Code of Federal Regulations* (CFR) and the *Federal Register* did not find any federal regulations relating to the rule revisions herein for outdoor decks for one- and two-family dwellings.

Comparison with rules in adjacent states:

Illinois:

An Internet-based search did not reveal the existence of a statewide one- and two-family dwelling code. Dwelling regulation appears to be left up to the individual local units of government.

Iowa:

An internet based search revealed that the Iowa Building Code adopts the 2009 International Residential Code (IRC). The Iowa Building Code applies statewide to state owned and funded buildings. The 2009 IRC does not include prescriptive deck standards.

Michigan:

An Internet-based search revealed a mandatory, statewide one- and two-family dwelling code. The Residential Construction Code under the Construction Code Commission's General Rules, in section 408.305, contains the state amendments to the 2009 International Residential Code. The 2009 IRC does not include prescriptive deck standards.

Minnesota:

An Internet-based search revealed a mandatory, statewide one- and two-family dwelling code. The Minnesota Department of Labor and Industry, in Chapter 1309, adopts the 2006 IRC, chapters 2-10 and 43. Chapters 2-10 contain the general construction provisions of the IRC. The state code is being revised effective June 1, 2015 and will adopt the 2015 Minnesota version of the IRC developed by the International Code Council with input from Minnesota. The 2015 IRC includes prescriptive deck standards similar to the standards in these rules.

Summary of factual data and analytical methodologies:

The Department received input during numerous meetings with the Dwelling Code Council. The makeup of this Council is established under section 15.407 (10) of the Statutes and consists of members who are appointed by the Governor. The Council includes representatives of several types

of small businesses. The Council created a Deck Subcommittee to study and develop the prescriptive deck standards. Through the Deck Subcommittee and the Dwelling Code Council, the Department was able to gather information on the potential impacts of the rule revisions contained herein.

Analysis and supporting documents used to determine effect on small business or in preparation of economic impact analysis:

The rule revisions are not expected to significantly impact small business because they would clarify and simplify current requirements rather than impose new restrictions.

Fiscal Estimate and Economic Impact Analysis:

The Fiscal Estimate and Economic Impact Analysis are attached.

Effect on small business:

These proposed rules are not expected to have an economic impact on small businesses, as defined in s. 227.114 (1), Stats. The Department's Regulatory Review Coordinator may be contacted by email at Eric.Esser@wisconsin.gov, or by calling (608) 267-2435.

Agency contact person:

Dan Smith, Rules Coordinator, Department of Safety and Professional Services, Division of Policy Development, 1400 East Washington Avenue, Room 151, P.O. Box 8935, Madison, Wisconsin 53708; telephone 608-261-4463; email at Daniel2.Smith@wisconsin.gov.

Place where comments are to be submitted and deadline for submission:

Comments may be submitted to Dan Smith, Rules Coordinator, Department of Safety and Professional Services, Division of Policy Development, 1400 East Washington Avenue, Room 151, P.O. Box 8366, Madison, WI 53708-8935, or by email to Daniel2.Smith@wisconsin.gov. Comments must be received on or before * to be included in the record of rule-making proceedings.

TEXT OF RULE

SECTION 1. SPS 320.04 (6) (d) (Note), 320.09 (1) (Note) [1] and (9) (c) (Note), 320.19 (1) (b) (Note) and (2) (c) (Note), 321.02 (1) (d) (Note) and (3) (b) 2., 321.03 (1) (e) (Note), 321.04 (3) (b) 5. c. (Note), 321.125 (3) (c) (Note) and (6) (b) (Note), 321.16 (2) (c) 3. (Note), 321.17 (3) (e) (Note) [2], 321.18 (1) (d) c., 321.22 (1) (a) (Note), (3) (a) Table 321.22-A2 (Footnote) [2] and (6) (b) 3. c., 321.25 (1) (Note) [1], 321.25 Figure 321.25-A, (8) (d) 1. and (8) (d) 2., 321.27 (1) (b), (2) (Note) and (5) (b) (Note), and 321.40 (1) (h) (Note) are amended to read:

NOTE TO LRB: CHANGE THE WORD "appendix" TO "ch. SPS 325 Appendix A" AT ALL OF THE LOCATIONS LISTED ABOVE

SECTION 2. SPS 320.07 (12m) is created to read:

SPS 320.07 (12m) "ch. SPS 325 Appendix" means ch. 320-325 Appendix.

SECTION 3. SPS 321.225 is renumbered SPS 321.225 (1), and (1) (intro.) and (a) to (e) as renumbered are amended to read:

SPS 321.225 Decks. (1) Decks attached to dwellings and any detached ~~decks which~~ deck that serves an exit shall comply with the applicable provisions of ~~this chapter~~ subchs. II to X of ch. SPS 321, including ~~but not limited to~~ all of the following:

(a) Excavation requirements ~~of~~ under s. SPS 321.14~~;~~.
(b) Footing requirements ~~of~~ under s. SPS 321.15 (2) (f)~~;~~.
(c) Frost penetration requirements ~~of~~ under s. SPS 321.16~~;~~.
(d) Load requirements ~~of~~ under s. SPS 321.02~~;~~.
(e) Stair, handrail, and ~~guardrail~~ guard requirements of s. SPS 321.04~~; and~~.

SECTION 4. SPS 321.225 (2) is created to read:

SPS 321.225 (2) A deck that complies with the standards in Appendix B, and Appendix C if applicable, shall be considered as complying with sub. (1).

SECTION 5. SPS 321.24 (3) (d) 8. and (Note) are created to read:

SPS 321.24 (3) (d) 8. Along the bottom of door openings that are elevated above-grade.

Note: Flashing placed along the bottom of a door opening that is elevated above-grade can subsequently accommodate adding a deck outside the door.

SECTION 6. SPS 324.01 is renumbered SPS 324.01 (1) and amended to read:

SPS 324.01 (1) All electrical wiring, installations, equipment, and materials used in the construction of dwellings shall comply with the requirements of the Wisconsin Administrative Electrical Code, Vol. 2., ch. SPS 316, except as provided in sub. (2).

SECTION 7. SPS 324.01 (2) and (Note) are created to read:

SPS 324.01 (2) The requirements in NEC section 210.70(A)(2)(b) do not apply to a stairway for a deck.

Note: A light over the stairs is not required, but a light outside the door is.

SECTION 8. Chapters SPS 320 – 325 Appendix is renumbered Chapters SPS 320 – 325 Appendix A.

SECTION 9. Chapters SPS 320 to 325 Appendix B is created to read:

NOTE TO LRB: REVISE PAGINATION ON THE PRESCRIPTIVE DECK STANDARDS CONTENTS TO MATCH FINAL PAGINATION OF APPENDIX

Chapters SPS 320 – 325 Appendix B

Prescriptive Deck Standards

CONTENTS

Section		Page
1	GENERAL REQUIREMENTS	1
2	FOOTINGS, AND POST CONNECTIONS	3
3	POSTS AND POST-TO-BEAM CONNECTIONS	4
4	BEAMS	4
5	JOISTS	6
6	JOIST-TO-BEAM CONNECTIONS	8
7	JOIST HANGERS	8
8	LEDGER ATTACHMENTS	9
9	LEDGER-BOARD FASTENERS	11
10	FREE-STANDING DECKS	13
11	LATERAL SUPPORT	14
12	DECKING	16
13	GUARD AND POSTS	17
14	STAIRS	19
15	FRAMING PLAN	22

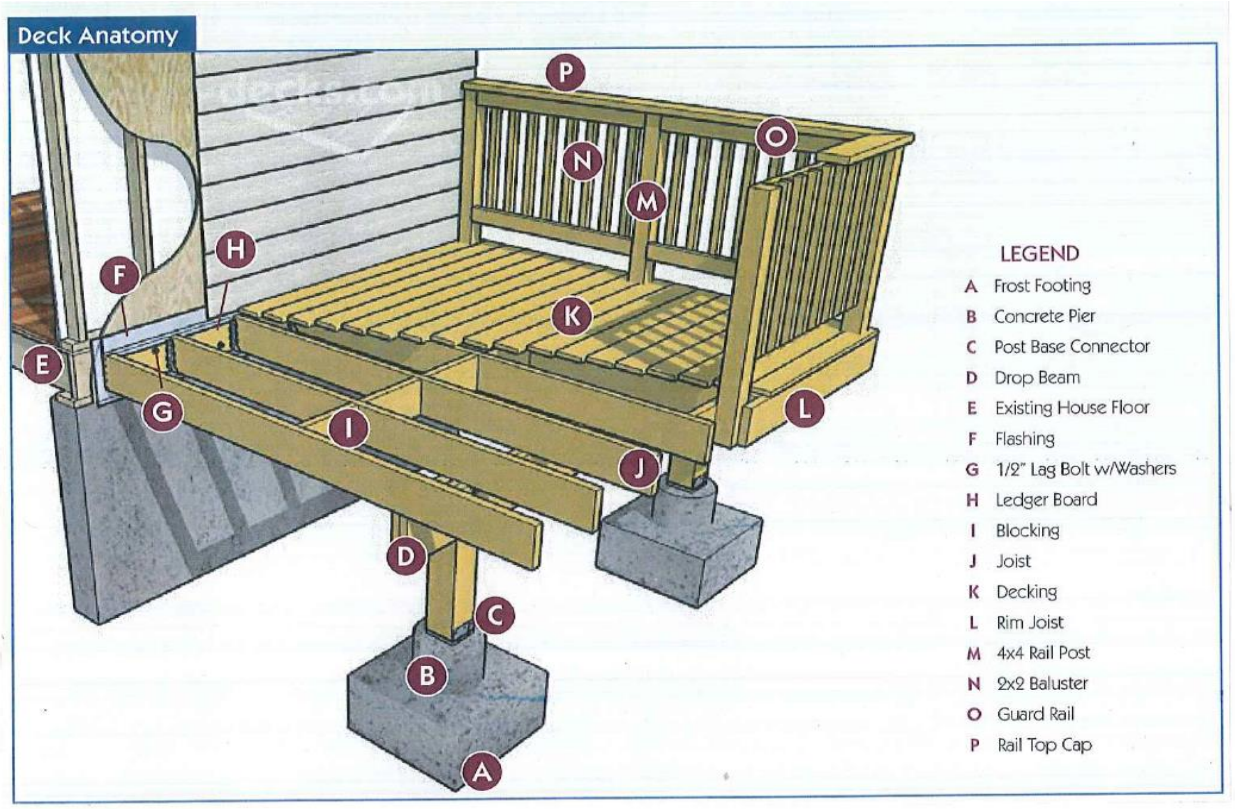

SECTION 1: GENERAL REQUIREMENTS

1. All lumber, including for decking, must be pressure-preservative-treated and must be either douglas fir/larch, hemlock/fir, spruce/pine/fir (SPF), or southern pine, of grade #2 or better – unless a naturally durable species such as a western red cedar is used. Lumber in contact with the ground must be rated as "ground-contact." The lumber must be identified by the grade mark of, or certificate of inspection issued by, a professional lumber-grading or inspection bureau or agency (www.alsc.org).

   Note: Not all treated lumber is rated for ground contact. See Table C-1 in Appendix C for further information.

2. Wood-plastic composites must bear a label indicating their performance criteria and compliance with ASTM D7032.

   Note: Wood-plastic composites are materials composed of wood fibers or powder that is bound with plastic and used typically as decking and elements of a guard or handrail.

   Note: When using a wood-plastic composite, exercise caution as some composite members do not have the same capabilities as their equivalent wood sizes.

3. Nails must be threaded, which includes ring-shanked (annular-grooved) and spiral-grooved.

   Note: A ⅛-inch pilot hole is recommended for all toe-nailing locations.

4. All fasteners must be galvanized steel, stainless steel, or approved for use with preservative-treated lumber.

5. Throughout this document, ½-inch-diameter bolts and lag screws are specified for various connections. Edge distance and spacing requirements are based on ½-inch-diameter fasteners. If larger (or smaller) fasteners are specified, edge distance and spacing need to be adjusted.

6. Carriage-bolts may be substituted where through-bolts are specified, if carriage-bolt washers are installed at the bolt head.

   Note: Carriage-bolt washers have square holes.

7. Hardware, including joist hangers or post anchors, must be galvanized steel with 1.85 ounces of zinc per square foot (G-185 coating), or stainless steel. All fasteners that are used with any hardware must be the same material as the hardware. All hardware must be installed in accordance with any instructions from the manufacturer.

   Note: For galvanized steel, look for product lines such as "Zmax," "Triple Zinc," or "Gold Coat."

   Note: Galvanized steel is not compatible with stainless steel, which can result in rapid corrosion and structural failure.

   Note: Hardware and fasteners that are beneath a hot tub which uses salt-water disinfection should be stainless steel, grade 304 or 316.

8. Every deck must have an electrical outlet along the perimeter of the deck and within 6.5 feet of the floor in accordance with NEC section 210.52(E)(3). See chapter SPS 316 of the Wisconsin Administrative Code for requirements about installing electrical wiring.

9. A deck constructed in accordance with these standards is not approved for concentrated loads that exceed 40 pounds per square foot (psf), such as from privacy screens, planters, built-in seating, hot tubs, stairs for multiple-level decks, or from snow-drift loads or sliding-snow loads. Engineering analysis is needed for these loads.

   Note: See Appendix C for features of a deck which are somewhat uncommon or which have more complexity than is addressed in this Appendix – such as design values for joists consisting of western cedar or red pine, framing details around chimneys and bay windows, or ledger boards for metal-plate-connected wood floor trusses. Appendix C also includes reference material, such as more-detailed specifications for fasteners.

10. Specifications for fasteners and hardware**.** All nails must meet the requirements of ASTM F1667. Wood screws must meet the requirements of ANSI/ASME B18.6.1. Bolts and lag screws must meet the requirements of ANSI/ASME B18.2.1.

    Fasteners to be hot-dipped galvanized must meet the requirements of ASTM A153, *Standard Specification for Zinc Coating (Hot-Dip) on Iron and Steel Hardware,* Class D for fasteners $^{3}/_{8}$" diameter and smaller or Class C for fasteners with diameters over $^{3}/_{8}$".

    Fasteners other than nails and timber rivets may consist of mechanically deposited zinc-coated steel with coating weights in accordance with ASTM B695, Class 55, minimum.

    Hardware to be hot-dipped prior to fabrication must meet ASTM A653, *Standard Specification for Steel Sheet, Zinc-Coated (Galvanized) or Zinc-Iron Alloy-Coated (Galvannealed) by the Hot-Dip Process,* G-185 coating. Hardware to be hot-dipped galvanized after fabrication must meet ASTM A123, *Specification for Zinc (Hot-Dip Galvanized) Coatings on Iron and Steel Products.*

11. Safety glazing at decks shall be in accordance with the safety glazing requirements of the UDC.

SECTION 2: FOOTINGS, AND POST CONNECTIONS

Footings must comply with all of the following:

1. Concrete must be used and must have a minimum compressive strength of 3,000 pounds per square inch.
2. Footing size and thickness must be in accordance with Table 1. (See sections 4 and 5 for determining post spacing and joist length.)
3. Post attachments must be in accordance with Figure 1 except expansion anchors are also permitted – and any instructions from the manufacturer of the anchor must be followed.
4. Post anchors must include a 1-inch-minimum base plate. Steel plates are not required.
5. Each post must bear directly over the middle one-third of a footing.
6. Footings must bear on solid ground below the frost penetration level or at least 48 inches below finished grade, whichever is deeper. Bearing onto unprepared fill material, organic soil, alluvial soil, or mud is prohibited. The bearing capacity of the soil is presumed to be at least 2000 pounds per square foot (psf), and must be verified by a building inspector prior to placement of concrete.
7. If the edge of a deck footing is closer than 5 feet to an existing house wall, the footing must bear at the same elevation as the existing footing for that wall.
8. Construction of footings over utility lines or any service pipe is prohibited.
   Note: Call the utility provider before digging.

Table 1
FOOTING SIZE (In Inches)[1,2,3]

Joist Length		Post Spacing (Measured Center to Center)										
		4'	5'	6'	7'	8'	9'	10'	11'	12'	13'	14'
6'	Corner Footing	8	9	10	11	11	12	12	13	14	14	15
	Intermediate Footing	10	11	12	13	14	15	15	16	17	17	18
	Footing Thickness	6	6	6	6	6	6	6	6	6	6	8
7'	Corner Footing	9	10	11	11	12	13	13	14	15	15	16
	Intermediate Footing	11	12	13	14	15	16	17	17	18	19	19
	Footing Thickness	6	6	6	6	6	6	6	6	8	8	8
8'	Corner Footing	10	10	11	12	13	14	14	15	15	16	17
	Intermediate Footing	12	13	14	15	16	17	18	19	19	20	21
	Footing Thickness	6	6	6	6	6	6	8	8	8	8	8
9'	Corner Footing	10	11	12	13	14	14	15	16	16	17	18
	Intermediate Footing	12	14	15	16	17	18	19	20	20	21	22
	Footing Thickness	6	6	6	6	6	8	8	8	8	8	8
10'	Corner Footing	10	12	12	13	14	15	16	16	17	18	18
	Intermediate Footing	13	14	15	17	18	19	20	21	21	22	23
	Footing Thickness	6	6	6	6	8	8	8	8	8	8	10
11'	Corner Footing	11	12	13	14	15	16	16	17	18	19	19
	Intermediate Footing	13	15	16	17	19	20	21	22	22	23	24
	Footing Thickness	6	6	6	6	8	8	8	8	8	10	10
12'	Corner Footing	11	12	14	15	15	16	17	18	19	19	20
	Intermediate Footing	14	15	17	18	19	20	21	22	23	24	25
	Footing Thickness	6	6	6	8	8	8	8	8	10	10	10
13'	Corner Footing	12	13	14	15	16	17	18	19	19	20	21
	Intermediate Footing	14	16	17	19	20	21	22	23	24	25	26
	Footing Thickness	6	6	6	8	8	8	8	10	10	10	10
14'	Corner Footing	12	13	15	16	17	18	18	19	20	21	22
	Intermediate Footing	15	17	18	19	21	22	23	24	25	26	27
	Footing Thickness	6	6	8	8	8	8	10	10	10	10	10
15'	Corner Footing	12	14	15	16	17	18	19	20	21	22	22
	Intermediate Footing	15	17	19	20	21	23	24	25	26	27	28
	Footing Thickness	6	6	8	8	8	10	10	10	10	10	12
16'	Corner Footing	13	14	15	17	18	19	20	20	21	22	23
	Intermediate Footing	16	18	19	21	22	23	25	26	27	28	29
	Footing Thickness	6	8	8	8	8	10	10	10	10	12	12

[1]All footing sizes are base diameters[2].

[2]For square footings, insert the diameter (d) into the following formula: $\sqrt{((d/2)^2 \times \pi)}$. This number will give you the square dimension and must be rounded up to the nearest inch.

[3]Joist length is the joist span plus any overhang beyond a beam. See section 5.4.

Figure 1
FOOTINGS

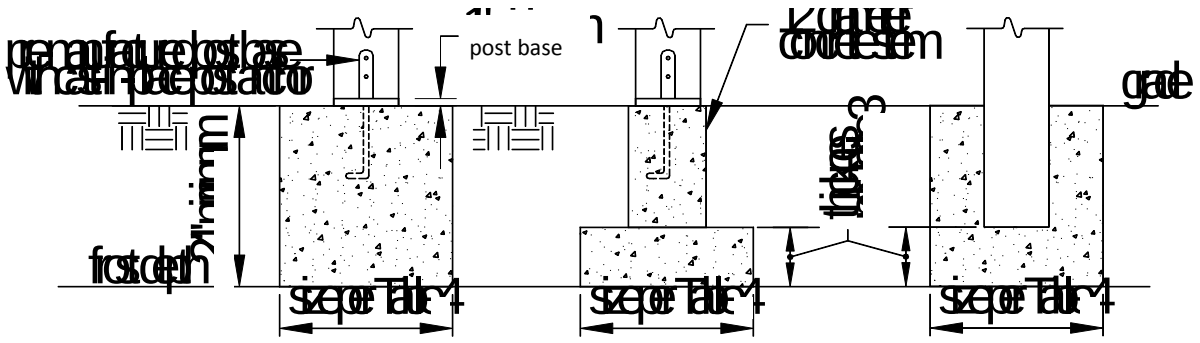

SECTION 3: POSTS AND POST-TO-BEAM CONNECTIONS

Posts must comply with all of the following:

1. The post height, measured from the top of the footing to the underside of the beam, must be in accordance with Table 2.

Table 2
MAXIMUM POST HEIGHT

Post Size	Maximum Height
4x4	6'
4x6	8'
6x6	14'

2. Any post supporting a beam splice must be a minimum of 6x6.
3. Beams must be attached to posts by the appropriate methods shown in Figure 2. Toe-nailing of beams to posts is prohibited.
4. Post caps, as shown in Figure 2, must be specifically designed for 2- or 3-ply beams and the post size used. Attachment must be in accordance with the manufacturer's instructions.
5. It is recommended that cut-ends of posts should be field-treated with a wood preservative. These preservatives can be found in the paint department of most hardware or home-center stores.

Figure 2

POST-TO-BEAM CONNECTIONS

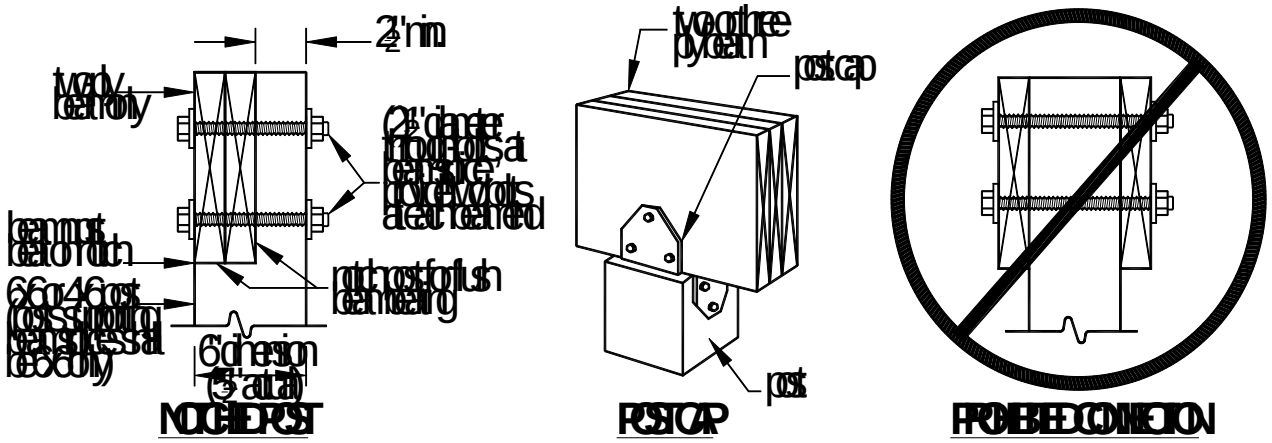

SECTION 4: BEAMS

Beams must comply with all of the following:

1. As shown in Figure 3, the beam-span length is measured between the centerlines of two adjacent posts and does not include the overhangs.
2. Beam size is determined using Table 3A or 3B. The depth of flush beams must be greater than or equal to the joist depth.
3. Beams may overhang past the center of the post up to one-fourth of the actual beam span, as shown in Figure 3.
4. Where multiple 2x members are used to assemble a beam, the plies of the beam must be fastened in accordance with Figure 4.
5. Pressure-preservative-treated glulam beams are permissible for spans longer than those shown in Table 3. However, a design and plan submission is required during the permit application process.

Figure 3
BEAM TYPES

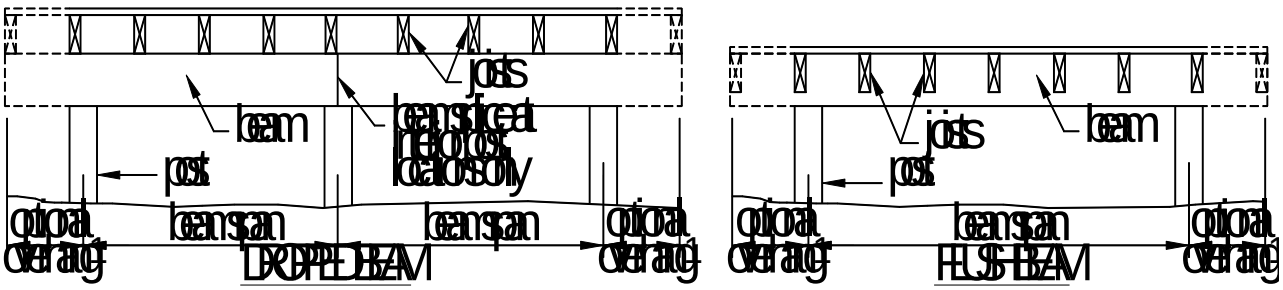

[1]The maximum length of the overhang is equal to one-fourth of the actual beam span length (0.25 x beam span).

Table 3A
MAXIMUM BEAM-SPAN LENGTH[1] FOR DOUGLAS FIR/LARCH[3], HEM/FIR[3], SPRUCE/PINE/FIR (SPF)[3], WESTERN CEDAR, PONDEROSA PINE[4], AND RED PINE[4]

Joist Span	(Number of Plies) Beam Size[2] – Inches											
	3x6 (2)2x6	3x8 (2)2x8	3x10 (2)2x10	3x12 (2)2x12	4x6	4x8	4x10	4x12	(3)2x6	(3)2x8	(3)2x10	(3)2x12
≤ 6'	5'-5"	6'-10"	8'-4"	9'-8"	6'-5"	8'-5"	9'-11"	11'-5"	7'-4"	9'-8"	12'-0"	13'-11"
≤ 8'	4'-8"	5'-11"	7'-3"	8'-5"	5'-6"	7'-3"	8'-7"	9'-11"	6'-8"	8'-6"	10'-5"	12'-1"
≤ 10'	4'-2"	5'-4"	6'-6"	7'-6"	4'-11"	6'-6"	7'-8"	8'-10"	6'-0"	7'-7"	9'-4"	10'-9"
≤ 12'	3'-10"	4'-10"	5'-11"	6'-10"	4'-6"	5'-11"	7'-0"	8'-1"	5'-6"	6'-11"	8'-6"	9'-10"
≤ 14'	3'-6"	4'-6"	5'-6"	6'-4"	4'-2"	5'-6"	6'-6"	7'-6"	5'-1"	6'-5"	7'-10"	9'-1"
≤ 16'	3'-1"	4'-1"	5'-1"	5'-11"	3'-11"	5'-2"	6'-1"	7'-0"	4'-9"	6'-0"	7'-4"	8'-6"
≤ 18'	2'-9"	3'-8"	4'-8"	5'-7"	3'-8"	4'-10"	5'-8"	6'-7"	4'-6"	5'-8"	6'-11"	8'-1"

[1]Spans are based on 40 psf live load, 10 psf dead load, normal loading duration, wet service conditions, and deflections of Δ=L/360 for main span and L/180 for overhang with a 220 lb. point load.

[2]Beam depth must be equal to or greater than joist depth if joist hangers are used (see Figure 8, Option 3).

[3]Incising is assumed.

[4]Design values based on northern species with no incising assumed.

Table 3B
MAXIMUM BEAM-SPAN LENGTH FOR SOUTHERN PINE[1]

Joist Span	(Number of Plies) Beam Size[2] – Inches							
	(2) 2x6	(2) 2x8	(2) 2x10	(2) 2x12	(3) 2x6	(3) 2x8	(3) 2x10	(3) 2x12
≤ 6'	6'-11"	8'-9"	10'-4"	12'-2"	8'-2"	10'-10"	13'-0"	15'-3"
≤ 8'	5'-11"	7'-7"	9'-0"	10'-7"	7'-5"	9'-6"	11'-3"	13'-3"
≤ 10'	5'-4"	6'-9"	8'-0"	9'-5"	6'-8"	8'-6"	10'-0"	11'-10"
≤ 12'	4'-10"	6'-2"	7'-4"	8'-7"	6'-1"	7'-9"	9'-2"	10'-9"
≤ 14'	4'-6"	5'-9"	6'-9"	8'-0"	5'-8"	7'-2"	8'-6"	10'-0"
≤ 16'	4'-3"	5'-4"	6'-4"	7'-6"	5'-3"	6'-8"	7'-11"	9'-4"
≤ 18'	4'-0"	5'-0"	6'-0"	7'-0"	5'-0"	6'-4"	7'-6"	8'-10"

[1]Spans are based on 40 psf live load, 10 psf dead load, normal loading duration, wet service conditions, and deflections of Δ=L/360 for main span and L/180 for overhang with a 220 lb. point load.

[2]Beam depth must be equal to or greater than joist depth if joist hangers are used (see Figure 8, Option 3).

Figure 4
BEAM ASSEMBLY

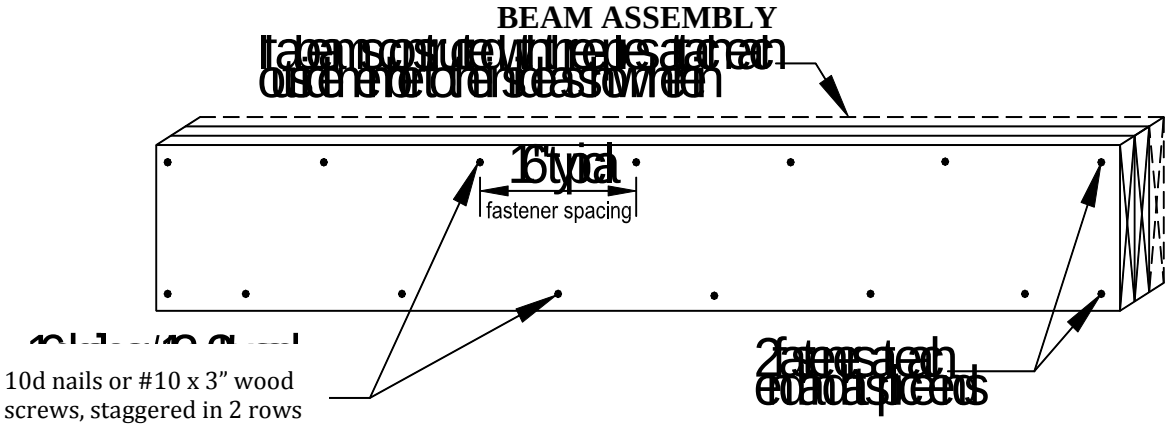

SECTION 5: JOISTS

Joists must comply with all of the following:

1. The joist-span length is measured between the centerline of bearing at each joist-span end and does not include the overhangs. Use Table 4 to determine the joist size based on span length and joist spacing. See section 12.4 for limits on joist spacing if the decking consists of a wood-plastic composite.
2. See Figures 5 through 7 for joist-span types.
3. Joists must bear at least 3 inches nominal onto beams, unless joist hangers are used in accordance with section 7.
4. Joists may overhang past the center of the beam up to one-fourth of the actual joist span.
5. Provide full-depth 2x blocking or bridging for 2x10 or deeper joists at intervals not exceeding 8 feet – except the blocking can be reduced to 60% of the height if placed above a beam, for drainage purposes. Attach the blocking or bridging with (3)10d toe-nails at each end.
6. Attach a continuous rim joist as shown in Figures 5 and 7 unless blocking or bridging is provided for each joist at the beam where a joist overhang begins. Attach the rim joist to the end of each joist with (3)10d nails or (3)#10 by 3-inch wood screws.

Figure 5
JOISTS WITH DROPPED BEAM – DECK ATTACHED AT HOUSE

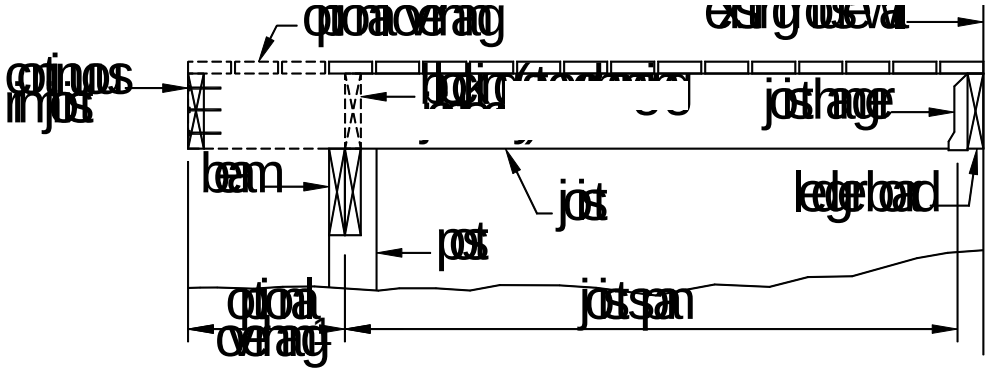

[1]The maximum length of the overhang is equal to one-fourth of the actual joist span length (0.25 x joist span).

Figure 6
JOISTS WITH FLUSH BEAM – DECK ATTACHED AT HOUSE

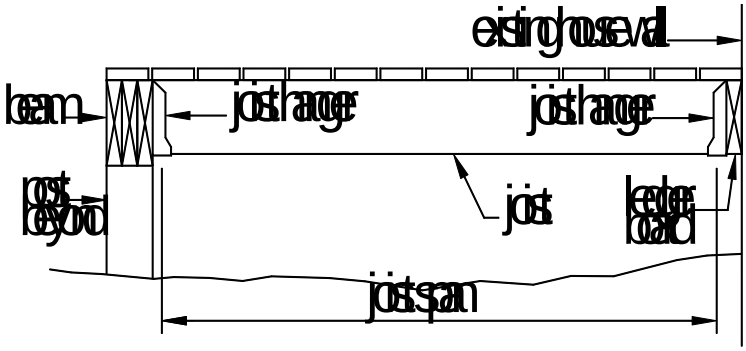

Figure 7
JOISTS WITH TWO DROPPED BEAMS/FREE-STANDING DECK
(See section 10 for more information.)

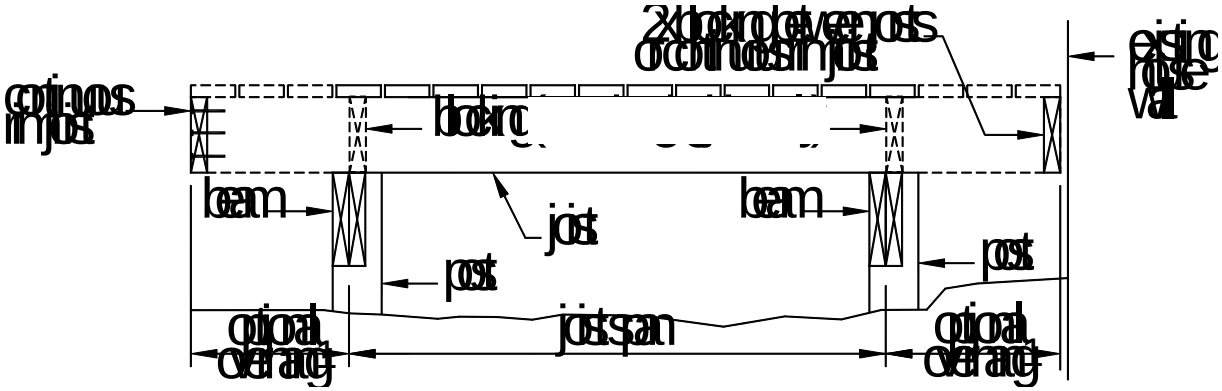

[1]The maximum length of the overhang is equal to one-fourth of the actual joist span length (0.25 x joist span).

Table 4
MAXIMUM JOIST-SPAN LENGTH[1]

Joist Spacing (on center)	Joist Size	Douglas Fir/Larch, Hem/Fir, SPF[2]		Southern Pine	
		Without Overhang	With Overhangs	Without Overhang	With Overhangs
12"	2x6	9'-1"	8'-1"	9'-6"	8'-7"
	2x8	12'-6"	9'-5"	13'-1"	10'-1"
	2x10	15'-8"	13'-7"	16'-2"	14'-6"
	2x12	18'-0"	18'-0"	18'-0"	18'-0"
16"	2x6	8'-3"	8'-0"	8'-7"	8'-7"
	2x8	11'-1"	9'-5"	11'-10"	10'-1"
	2x10	13'-7"	13'-7"	14'-0"	14'-0"
	2x12	15'-9"	15'-9"	16'-6"	16'-6"
24"	2x6	6'-9"	6'-9"	7'-6"	7'-6"
	2x8	9'-1"	9'-1"	9'-8"	9'-8"
	2x10	11'-1"	11'-1"	11'-5"	11'-5"
	2x12	12'-10"	12'-10"	13'-6"	13'-6"

[1]Spans are based on 40 psf live load, 10 psf dead load, normal loading duration, wet service conditions and deflections of Δ=L/360 for main span and L/180 for overhang with a 220 lbs. point load.

[2]Incising is assumed.

SECTION 6: JOIST-TO-BEAM CONNECTIONS

Joists must be attached to beams in accordance with Figure 8 and all of the following:

1. Use Options 1 or 2 if joists bear on a dropped beam.
2. Use Option 3 if joists bear at a flush beam; see section 7 for hanger requirements.
3. Mechanical fasteners or hurricane clips must have a minimum capacity of 100 pounds in both uplift and lateral directions. Installation must be in accordance with the manufacturer's instructions.

Figure 8
JOIST-TO-BEAM CONNECTIONS

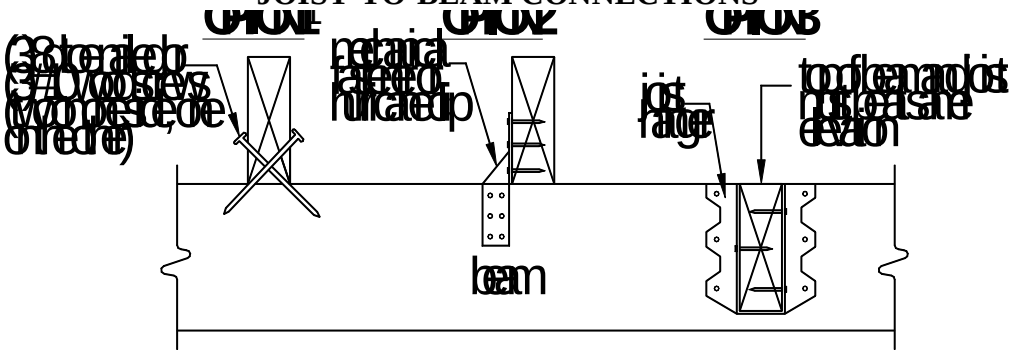

[1]Option 1 is not allowed on free-standing decks.

SECTION 7: JOIST HANGERS

Joist hangers must comply with all of the following:

1. The joist-hanger depth (d, as shown in Figure 9) must be at least 60 percent of the joist depth.
2. The manufactured width of the joist hanger must accommodate the number of plies being carried.

3. Do not bend hanger flanges to accommodate field conditions.
4. For joist hangers that are fastened to a ledger board, screws which are recommended by the manufacturer must be used. All other fasteners are permitted to be nails. The number of fasteners and the manner in which they are used must be as specified by the manufacturer.
5. Use joist hangers with inside flanges if clearances to the edge of the beam or ledger board dictate.
6. Clip-angles or brackets used to support framing members in lieu of joist hangers are prohibited.
7. Joists must not frame in from both sides of the same beam. Engineering analysis is needed if more beams are needed than are shown in Figures 5 to 7.
8. Each joist hanger must have the minimum capacity listed in Table 5.

Figure 9
JOIST HANGERS

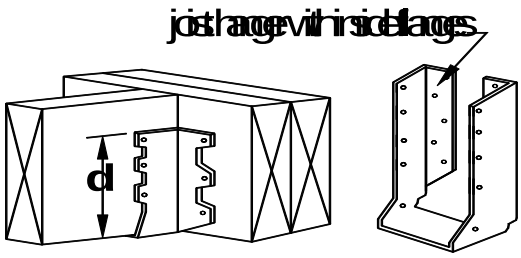

Table 5
JOIST HANGER DOWNLOAD

Joist Size	Minimum Capacity, lbs
2x6	500
2x8	500
2x10	600
2x12	700

SECTION 8: LEDGER ATTACHMENTS

General requirements. Ledger boards must be attached to the existing house in accordance with all of the following and section 9. Compliance is critical to ensure the safety and structural stability of your deck.

1. The ledger-board depth must be greater than or equal to the depth of the deck joists, but not less than a 2x8.
2. The ledger board must be attached in accordance with one of the conditions shown in Figures 11 through 13 – except if metal-plate-connected wood floor trusses were used in the house, see the text below for manufactured wood trusses.
3. The existing band board on the house must be capable of supporting the deck. If this cannot be verified or if existing conditions differ from the details here, then a free-standing deck or an engineered design is required.
4. The top of the ledger board and the top of the deck joists must be at the same elevation.

Wood I-joists. Many homes are constructed with wood I-joists, as shown in Figure 10. Rather than utilize a 2x band board, these systems are often constructed with a minimum 1-inch-thick engineered wood product (EWP) band board capable of supporting a deck. If a minimum 1-inch EWP or 2x band board is not present, then a free-standing deck is required, as addressed in section 10.

Figure 10: WOOD I-JOISTS

Manufactured wood trusses. A metal-plate-connected wood truss (MPCWT) is an engineered, prefabricated structural component that is designed for each specific application. MPCWT systems that are used in residential floors are often installed with a 2x4 lumber "ribbon" board at the ends of the trusses to tie the ends of the trusses together (see Detail 1 in section 7 of Appendix C.). The ribbon board, by itself, is not intended to support the deck ledger and deck. Installing a residential deck where the floor for the house uses a MPCWT system must be in accordance with a standard

detail provided by the truss designer, a corresponding detail in section 7 of Appendix C, or a full plan submission – unless the deck is free-standing as addressed in section 10.

Siding and flashing. Flashing must be installed in accordance with all of the following:

1. The exterior finish, such as house siding, must be removed in the area for the ledger board prior to the installation of the ledger board.
2. Continuous flashing with a drip edge, as shown in Figure 11, is required at a ledger board that is attached to wood-framed construction. Caulking is needed with the flashing at a threshold to prevent water intrusion due to splash from the deck or due to melting snow and ice.
3. Flashing must be a corrosion-resistant metal having a minimum nominal 0.019-inch thickness – such as galvanized steel coated with 1.85 ounces of zinc per square foot (G-185 coating), copper (attached using copper nails only), or stainless steel – or must be a UV-resistant plastic recommended by its manufacturer for this use. Do not use aluminum in direct contact with lumber treated with preservatives that contain copper, such as ACQ, copper azole, or ACZA.

Figure 11
ATTACHMENT OF LEDGER BOARD TO BAND BOARD OR BAND JOIST

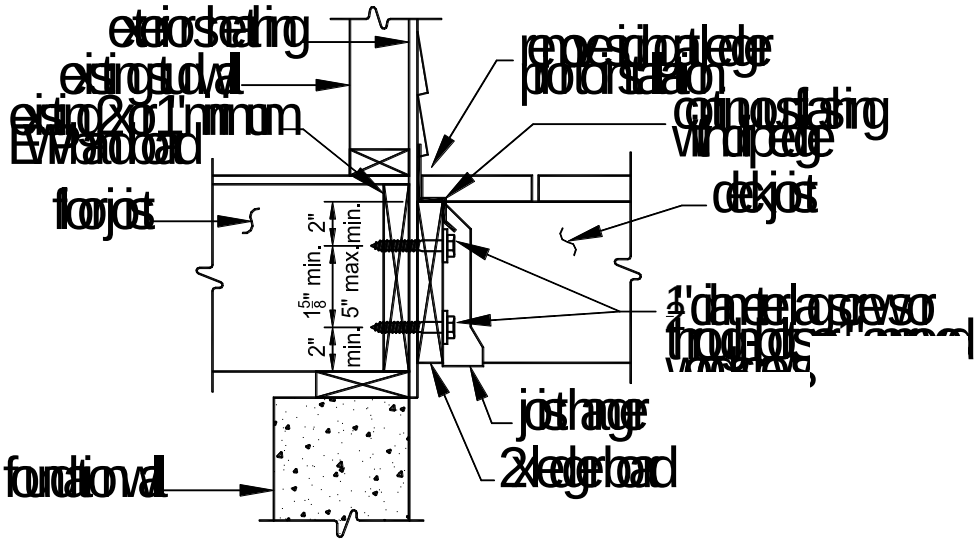

Figure 12
ATTACHMENT OF LEDGER BOARD TO SOLID FOUNDATION

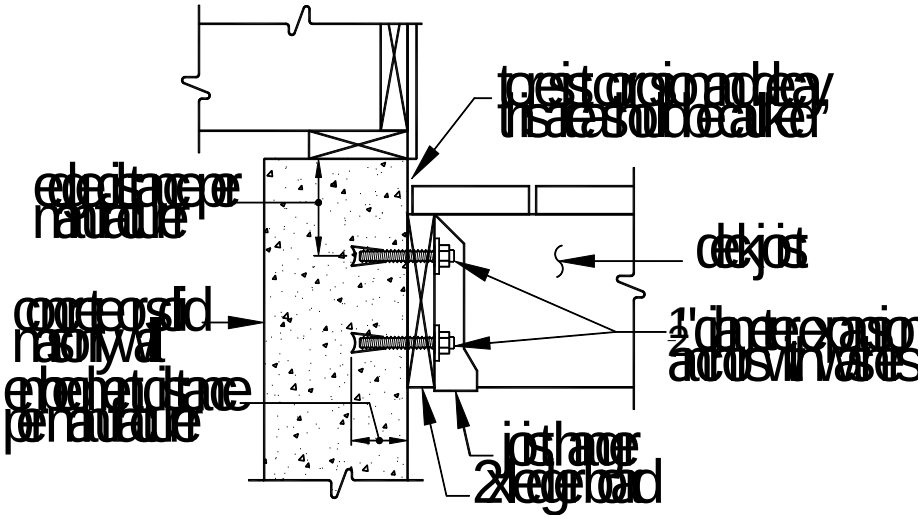

Figure 13
ATTACHMENT OF LEDGER BOARD TO HOLLOW FOUNDATION

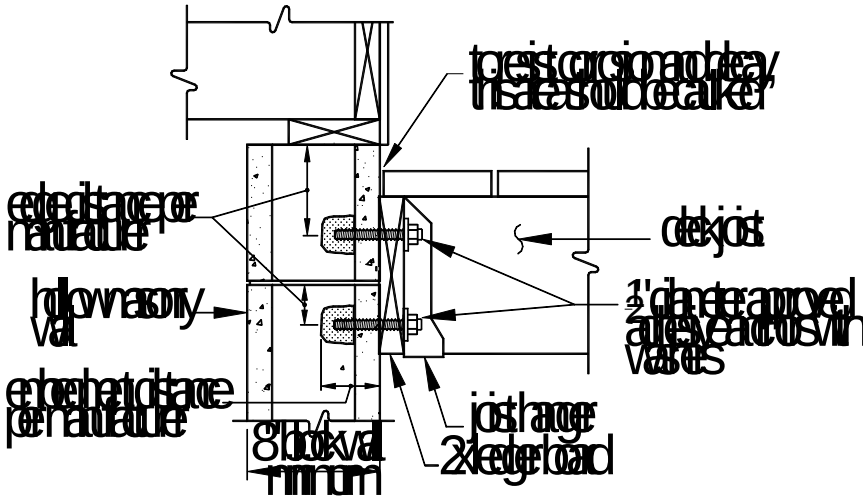

Prohibited ledger attachments. Attaching a ledger board to or through an exterior veneer such as brick or stone, or to or through a masonry chimney, or to a house overhang – as shown below – are prohibited. In such cases, the deck must be free-standing, as addressed in section 10. Attaching a ledger board to a house overhang is allowed if supported by engineering.

Figure 14
PROHIBITED LEDGER ATTACHMENTS

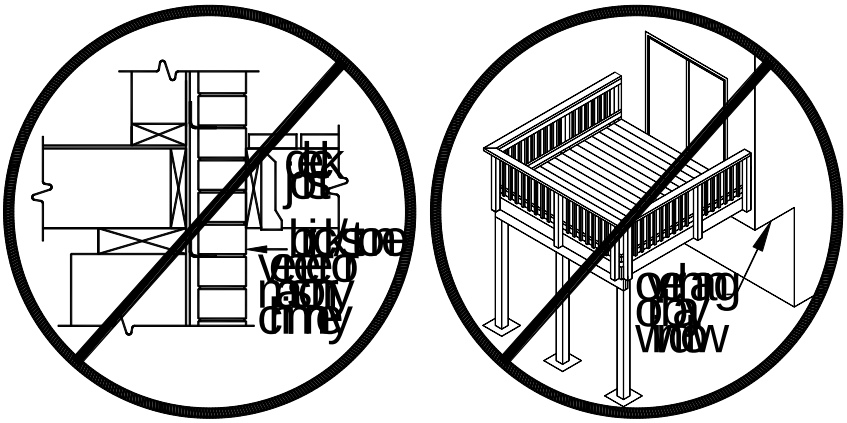

General requirements. Ledger board fasteners must be installed in accordance with this section. Placement and spacing must be in accordance with Figure 15 and Table 6. Only the fastener types listed here are approved for use; lead anchors are prohibited. Adequacy of connections may be verified by local inspectors.

Figure 15
LEDGER BOARD FASTENER SPACING AND CLEARANCES

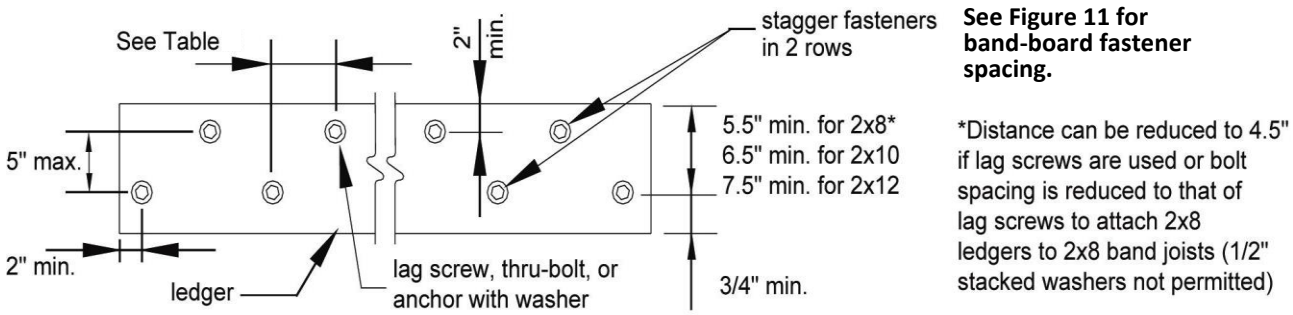

Table 6
LEDGER BOARD FASTENER SPACING, ON CENTER[1,2,3]

Fastener	Band Board	Joist Span: less than or equal to						
		6'	8'	10'	12'	14'	16'	18'
Lag screws	1" EWP	24"	18"	14"	12"	10"	9"	8"
	$1^1/_8$" EWP	28"	21"	16"	14"	12"	10"	9"
	2x Lumber	30"	23"	18"	15"	13"	11"	10"
Through-Bolts	1" EWP	24"	18"	14"	12"	10"	9"	8"
	$1^1/_8$" EWP	28"	21"	16"	14"	12"	10"	9"
	2x Lumber	36"	36"	34"	29"	24"	21"	19"
Through-Bolts with ½" stacked washers[4,5]	2x Lumber	36"	36"	29"	24"	21"	18"	16"
Adhesive anchors	——	32"	32"	32"	24"	24"	16"	16"

[1]These values are valid for deck ledgers consisting of douglas fir/larch, hem/fir, or southern pine; and for band boards consisting of douglas fir-larch, hem-fir, spruce-pine-fir, southern pine, or engineered wood product (EWP).

[2]Where solid-sawn pressure-preservative-treated deck ledgers are attached to engineered wood products (minimum 1" thick wood structural panel band joist or structural composite lumber including laminated veneer lumber), the ledger attachment must be designed in accordance with accepted engineering practice. These tabulated values are in accordance with that practice and are based on 300 lbs and 350 lbs for 1" and $1^1/_8$" EWP rim board, respectively.

[3] The thickness of the sheathing over the band board must not exceed $^{15}/_{32}$".

[4] The maximum gap between the face of the ledger board and face of the wall sheathing is ½".

[5] Wood structural panel sheathing, gypsum board sheathing, or foam sheathing is permitted between the ledger board and the band board. Stacked washers are permitted in combination with wood structural panel sheathing, but are not permitted in combination with gypsum board or foam sheathing. The maximum distance between the face of the ledger board and the face of the band board is 1".

Through-bolts. Through-bolts must have a diameter of ½ inch. Pilot holes for through-bolts must be $^{17}/_{32}$ to $^{9}/_{16}$ inches in diameter. Through-bolts must be equipped with washers at the bolt head and nut. Bolts should be tightened 6 to 12 months after construction due to drying and wood shrinkage.

Expansion anchors. Expansion or adhesive anchors must be used for attaching a ledger board to a concrete or solid masonry wall, as shown in Figure 12. The bolt or threaded rod of expansion anchors must have a diameter of ½ inch, which in some cases may result in needing a $^{5}/_{8}$-inch-diameter anchor. Expansion anchors must be installed in accordance with the manufacturer's instructions and must be equipped with washers.

Adhesive anchors. Approved adhesive anchors with a ½-inch-diameter threaded rod must be used for attaching a ledger board to hollow masonry, as shown in Figure 13. Examples of approved adhesive anchors include the Epcon Acrylic 7 by ITW Ramset/Red Head, and the HY-20 by Hilti. Adhesive anchors are also permitted with concrete or solid masonry installations. Adhesive anchors must be installed in accordance with the manufacturer's instructions and must be equipped with washers. Adhesive cartridges should remain on the jobsite for inspector verification.

Lag screws. The diameter, length, and shank of lag screws must comply with Figure 16. Lag screws must be equipped with washers and be installed in the following sequence:

1. Drill a ½-inch-diameter hole in the ledger board and a $^{5}/_{16}$-inch-diameter pilot hole into the solid-connection material of the existing house.
2. Insert the lag screw through the ledger board and into the pilot hole by turning. Do not drive with a hammer. Use soap or a wood-compatible lubricant if needed to facilitate tightening.
3. Tighten each lag screw snugly, but do not over-tighten so as to cause wood damage.

Figure 16
LAG SCREW

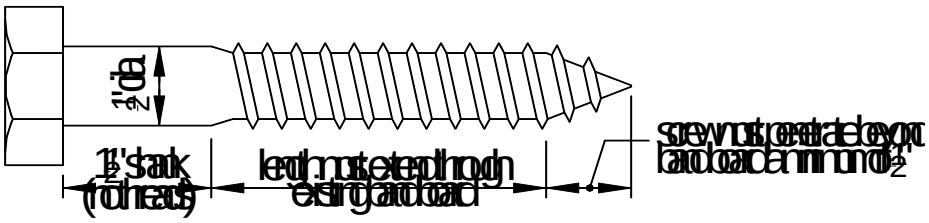

SECTION 10: FREE-STANDING DECKS

A deck that is free-standing does not utilize the exterior wall of the existing house to support vertical loads. Instead, an additional beam is provided at or offset from the existing house wall, as shown in Figure 17. If the edge of a deck footing is closer than 5 feet to an existing exterior house wall, the footing must bear at the same elevation as the existing wall footing as shown in Figure 17.

For a house with a basement, a cylindrical footing (caisson) is recommended to minimize required excavation at the basement wall.

Figure 17
FREE-STANDING DECK

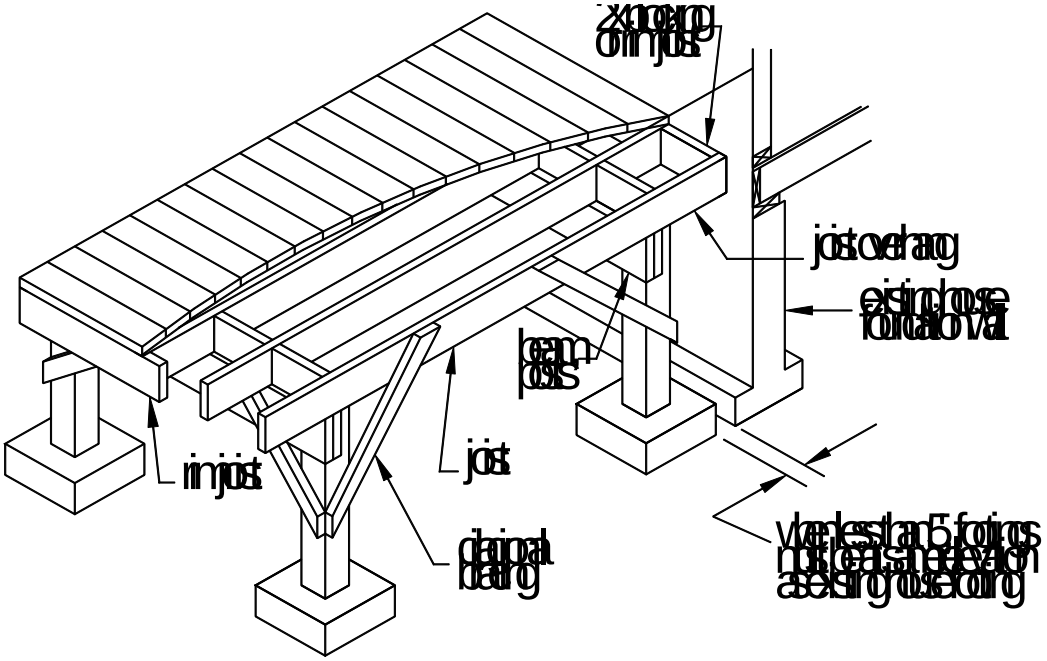

SECTION 11: LATERAL SUPPORT

A deck that is more than 24 inches above grade must resist lateral loads in accordance with the following:

Diagonal Bracing. Provide diagonal bracing both parallel and perpendicular to the beam at each post as shown in Figure 18. Where parallel to the beam, the bracing must be bolted to the post at one end and to the beam at the other. Where perpendicular to the beam, the bracing must be bolted to the post at one end and to a joist or blocking between joists at the other. Where a joist does not align with the bracing location, provide blocking between the adjacent joists. **Exceptions:** Bracing is not required perpendicular to the house for a deck that is attached to the house with both a ledger board under sections 8 and 9 and the connection specified in either Figure 19 or 20. For a free-standing deck that is attached to the house as specified in Figure 21, bracing parallel to the house

may be omitted at the beam adjacent to the house. All bracing may be omitted for a deck which is attached to the house in accordance with sections 8 and 9 or Figure 21 and which has all of its decking installed at a 45 degree angle to the deck joists.

Figure 18
DIAGONAL BRACING REQUIREMENTS

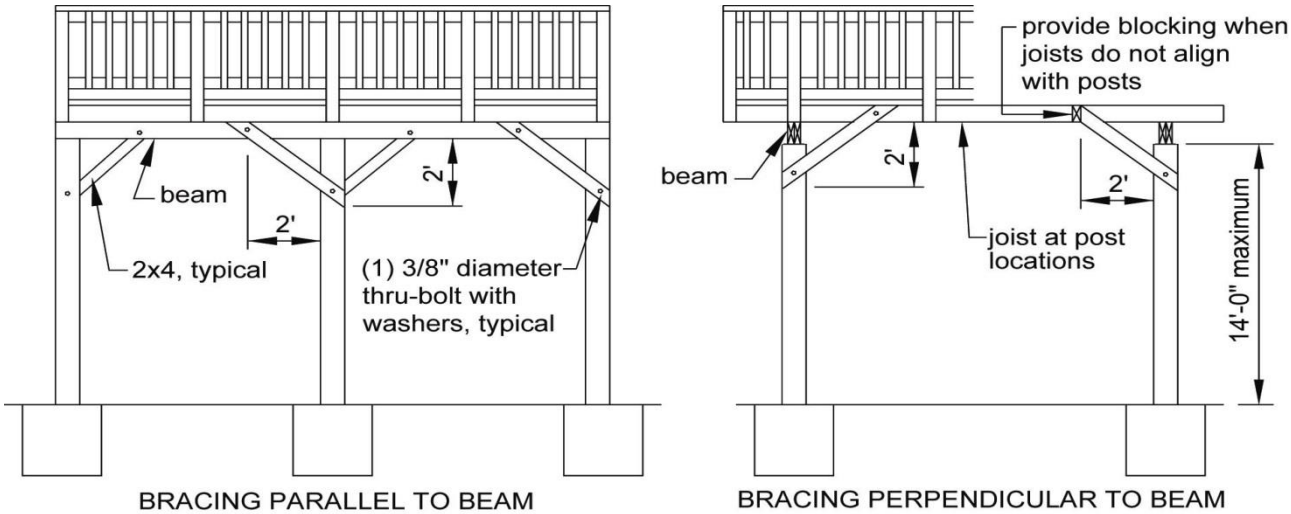

Figure 19
TENSION-TIE CONNECTION, WITH LEDGER BOARD

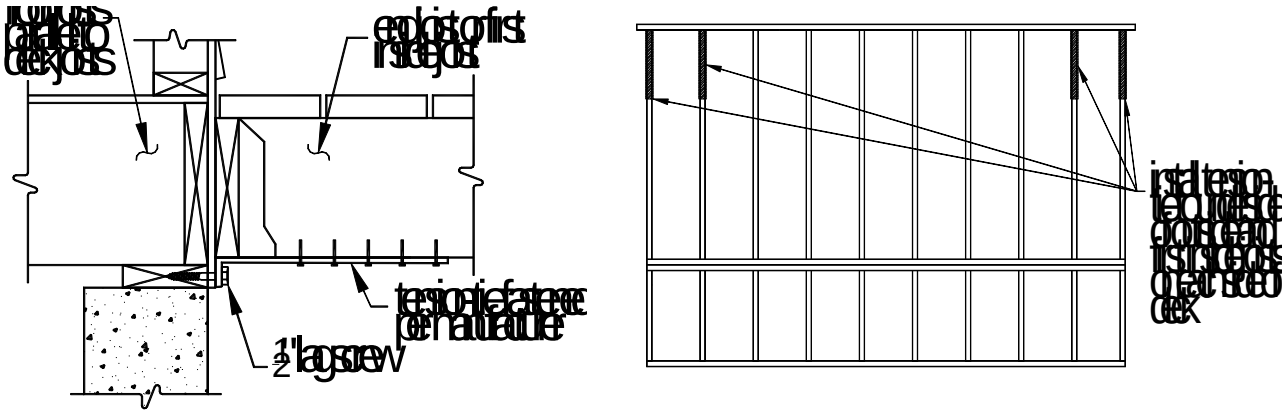

Tension-tie requirements. Tension ties, if used instead of perpendicular bracing as described above, must comply with all of the following, but are not permitted for free-standing decks:

1. The deck joists and floor joists must be parallel.

2. At least 4 ties must be installed, at the end joist and first inside joist at each end of the deck as shown in Figure 19. A set of tension-ties must be installed for each structurally independent section of a multi-level deck.
3. Approved tension-ties include the LTS19-TZ from USP or DTT1Z from Simpson Strong-Tie.
4. The minimum capacity of each tension-tie is 750 pounds.
5. Tension ties which are not available in a G-185 zinc coating require a barrier membrane separating the tension tie and the preservative-treated joist. The barrier membrane must be recommended for this location by its manufacturer.
6. Tension-ties must be attached to the underside of the joists in accordance with the manufacturer's instructions. Tension-ties must be attached to the exterior wall with lag screws as shown in Figure 19. Lag screws must penetrate a minimum of 3 inches into the sill plate or top plate of a wood-framed wall.
7. Where attaching to a concrete wall, lags screws may be replaced with adhesive or expansion anchors and a ½-inch threaded rod, with a withdrawal capacity of at least 750 pounds. The anchor must be installed in accordance with the manufacturer's instructions.

Figure 20
HOLD-DOWN TENSION DEVICE, WITH LEDGER BOARD

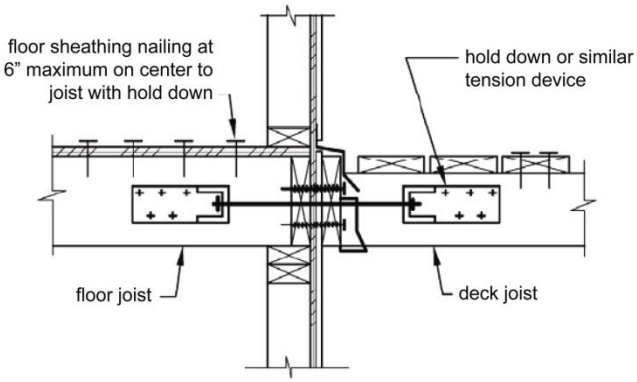

Hold-down tension devices. Hold-down tension devices, if used instead of perpendicular bracing as described above, must be provided in at least two locations per deck, and each device must have an allowable-stress-design capacity of at least 1,500 pounds.

Free-standing deck – attachment to house. Attach the deck's rim joist to the existing house exterior wall as shown in Figure 21 for a free-standing deck, if diagonal bracing parallel to the house is omitted, as described above. The wall must be sheathed with minimum $^{3}/_{8}$-inch wood structural panel sheathing. Use lag screws or through-bolts if fastening to an existing band joist or wall stud; and use expansion or adhesive anchors if fastening to concrete or masonry. Do not attach to brick veneers. Verify this condition in the field prior to utilizing this method. Fasteners must be 16 inches on center and staggered in 2 rows. Flashing over the rim joist is required and must be installed in accordance with the flashing provisions in section 8.

Figure 21
ATTACHMENT OF FREE-STANDING DECK TO HOUSE FOR LATERAL SUPPORT

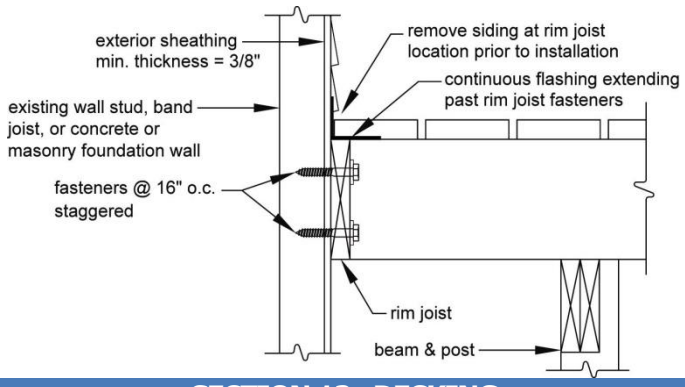

SECTION 12: DECKING

All decking materials must be wood or a wood-plastic composite and must comply with all of the following:

1. Wood decking must be 2x4s, 2x6s, or five-quarter span-rated decking boards. Wood-plastic-composite sizes must be in accordance with the manufacturer's instructions. Plastic decking may be used if it is approved by a professional testing organization for supporting a live load of 40 psf and is installed according to the manufacturer's instructions.
2. Decking must be attached in accordance with Figure 22, and may be placed at an angle of 45 to 90 degrees to the joists unless disallowed in the manufacturer's instructions. If the decking is wet, place it with no gap so that after drying, a ⅛-inch gap is created.
3. Decking may overhang a joist by up to 3 inches unless disallowed in the manufacturer's instructions.
4. The center-to-center joist spacing may be up to 24 inches for wood decking, but may not exceed 16 inches for wood-plastic-composite decking unless specified otherwise by the manufacturer.
5. Each wood decking member must bear on a minimum of 4 joists or intermediate blocking between joists.
6. Placement and attachment of wood-plastic composites must be in accordance with the manufacturer's instructions.
7. Attach the decking to the rim joist in accordance with Figure 23.

Figure 22
TYPICAL DECKING

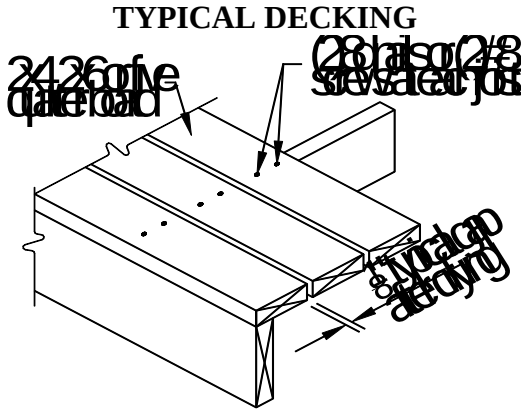

Figure 23
RIM JOIST CONNECTION

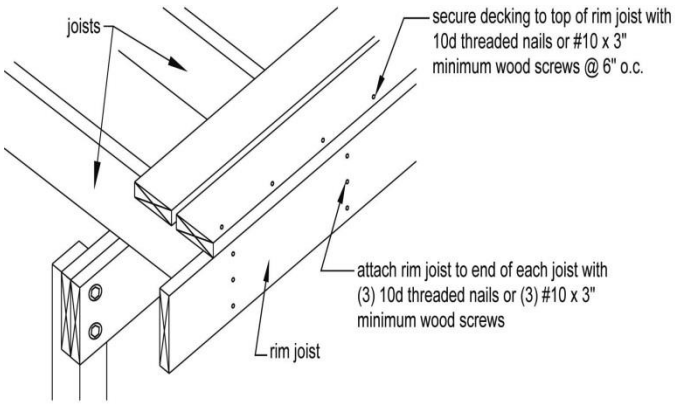

SECTION 13: GUARD AND POSTS

All open sides of a deck area that is more than 24 inches above grade – at any point within 36 inches beyond the edge of the deck – must have a guard that complies with Figure 24 and with all of the following:

1. Required horizontal guards shall not have openings from the walking surface to the required guard height which allow passage of a sphere 4 inches in diameter, when applying a force of 4 pounds.
2. Required guards at stairs shall not have openings which allow passage of a sphere $4^3/_8$ inches in diameter, when applying a force of 4 pounds, other than the triangular opening at the side of an open stair formed by the riser, tread, and bottom rail of a guard, which shall not allow passage of a 6” sphere, when applying a force of 4 pounds.
3. Wet lumber must be spaced such that when shrinkage due to drying occurs, a compliant opening is maintained.
4. Rope, cable, or a similar non-rigid material may be used instead of balusters if it is strung with maximum openings of 3½ inches and with vertical supports no more than 4 feet apart.
5. The guard and posts must withstand a 200-pound load applied in any direction.
6. Guard-infill components, such as balusters and panel fillers, must withstand a horizontally applied, perpendicular load of 50 pounds on any one-foot-square area.
7. Wood-plastic composites of equivalent dimensions may be substituted for the guard cap and infill elements shown in Figure 24 if the manufacturer’s instructions permit this use.

Figure 24
GUARDS

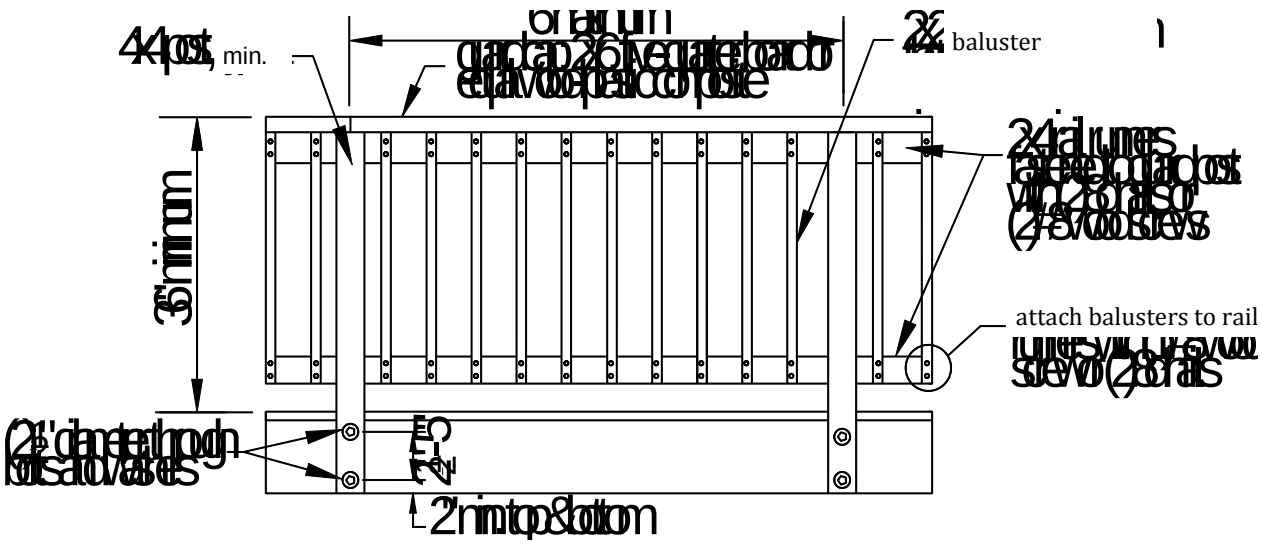

Guard posts. Guard posts must be attached to the deck structure in accordance with all of the following:

1. Notching guard posts, as shown in Figure 25, is prohibited.
2. Hold-down anchors, as shown in Figures 26 and 27, must be used to attach the guard post to the end joist and rim joist, respectively.
3. Hold-down anchors must have a minimum capacity of 1,800 pounds.
4. Guard posts may be attached to either side of the end joist or rim joist.
5. Bolt holes for a post must be at least 2 inches from the wood edge, at least 2½ inches apart, and no more than 5 inches apart.

Figure 25
POST NOTCHING PROHIBITED

Figure 26
GUARD POST TO END JOIST

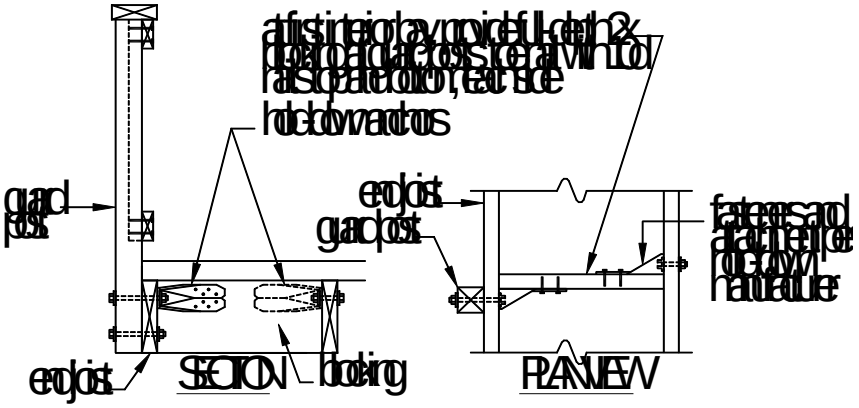

Figure 26
GUARD POST TO RIM JOIST

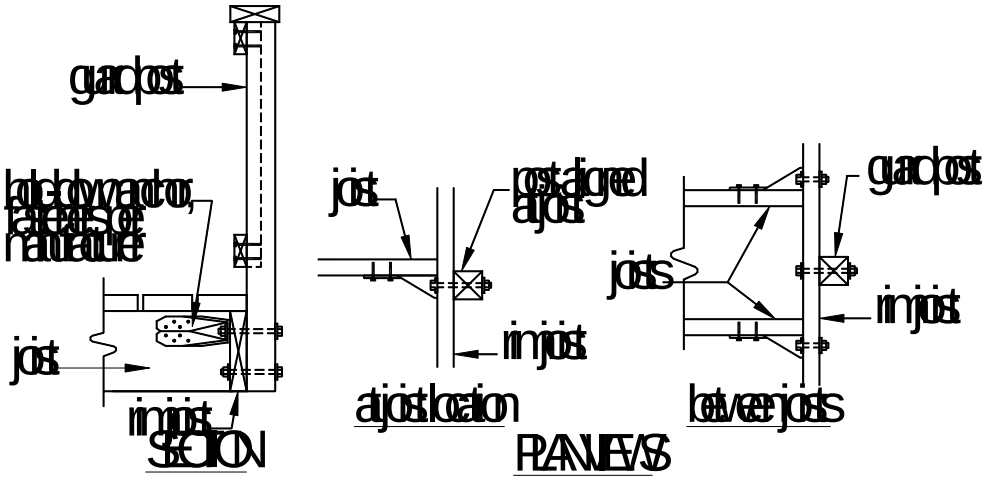

SECTION 14: STAIRS

Stair dimensions. Stair dimensions must comply with all of the following:

1. The minimum width of a stairway is 36 inches.
2. Handrails and associated trim may project a maximum of 4½ inches into the required width at each side of the stairway. The minimum clear width at and below the handrail, including at treads and landings, cannot be less than 31½ inches where a handrail is installed on one side, and 27 inches where handrails are provided on both sides.
3. Stair geometry and openings must be as shown in Figure 27.

Figure 27
TREADS AND RISERS

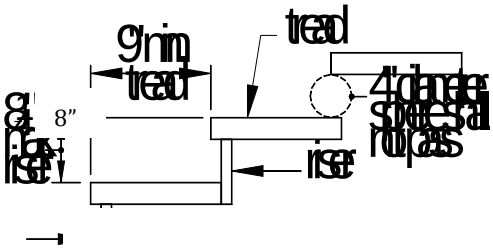

4. Within a stairway flight, the largest tread depth may not exceed the smallest tread depth by more than $^{3}/_{8}$ inch, and the largest riser height may not exceed the smallest riser height by more than $^{3}/_{8}$ inch.
5. If the total vertical height of a stairway exceeds 12 feet, an intermediate landing is required and must be constructed as a free-standing deck with flush beams and with posts.
6. Any landing width must equal or exceed the total width of the stairway it serves.

Stair stringers. Stringers must comply with all of the following:

1. Stringers must be sawn or solid 2x12s complying with the above tread and riser dimensions.
2. Cut stringers must be spaced no more than 18 inches on center.
3. Stringers must bear on a solid surface, a minimum of 3 ½ inches thick and 8 inches in diameter, and attach to the deck or a landing in accordance with Figure 28. Prior to placement of solid surface, all loose or organic material shall be removed.
4. Stringer-span length is measured using the horizontally projected distance between the centerlines of bearing at each end.
5. The span length of a cut stringer must not exceed 6 feet-0 inches, and the throat size of cut stringers must not be less than 5 inches, as shown in Figure 29.

Solid-stringer exception: Stringers for a stairway that has a width of 36 inches may have a horizontally projected span of up to 13 feet 3 inches if the stairway is framed solely with 2 solid stringers.

Intermediate-supported stringers: If the total stringer length exceeds the above dimensions, a 4x4 post may be provided to support the stringer and shorten its span length. The 4x4 post must be notched and bolted to the stringer in accordance with Figure 2. The post must bear over the middle one-third of a footing that is constructed in accordance with Figure 29 and must be attached as shown in Figure 2. An intermediate landing as described above may also be provided to shorten the stringer span.

Figure 28
STRINGER BEARING

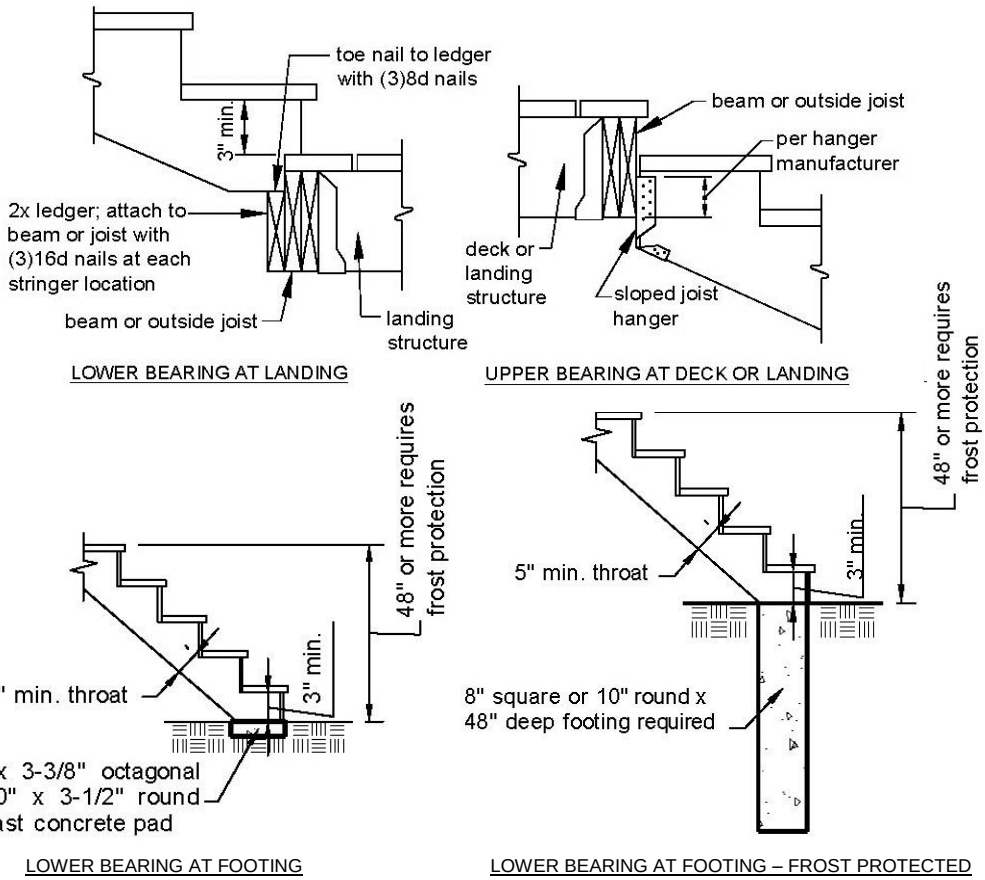

Figure 29
STAIR OR POST FOOTING

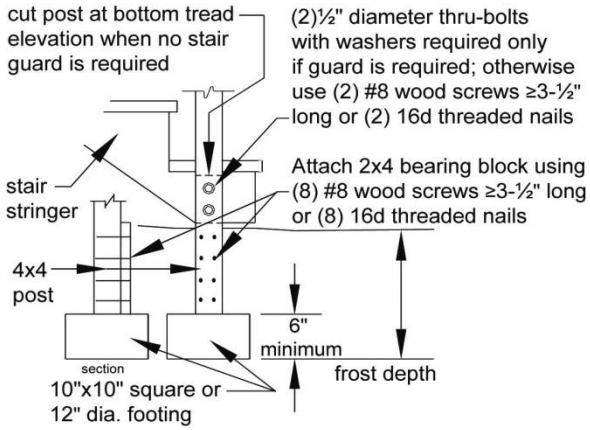

Figure 30
STRINGER SPAN LENGTH

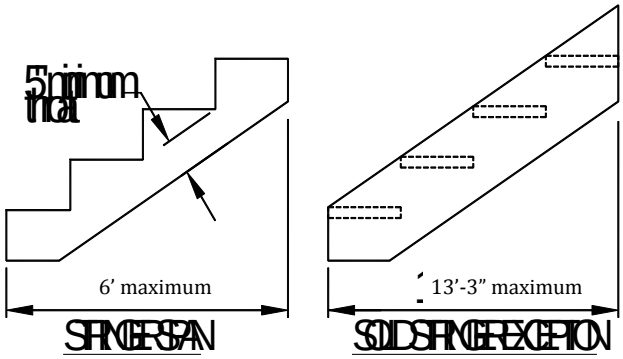

Tread and riser material. Treads and risers must comply with all of the following:

1. Tread material must be equivalent to the decking specified in section 12 and be attached in accordance with Figure 31, except wood-plastic composites must be attached in accordance with the manufacturer's instructions.
2. Stairs constructed using the solid-stringer exception noted above must have treads constructed of 2x wood material only and be attached in accordance with Figure 30.
3. Risers that are not open (as shown in Figure 27) must be framed with 1x lumber minimum or an manufacturer recommended wood-plastic composite.

Figure 31
STAIRWAY TREADS

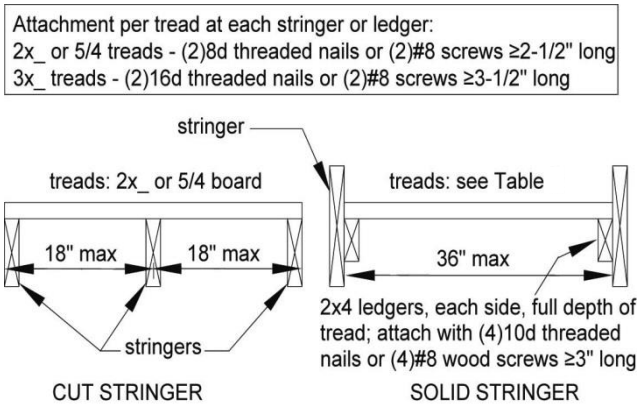

Table 7
MINIMUM TREAD SIZES[1]

Species	Cut Stringer	Solid Stringer
Douglas Fir/Larch, Hem/Fir, SPF[2]	2x4 or 5/4	2x8 or 3x4
Southern Pine	2x4 or 5/4	2x8
Redwood, Western Cedars, Ponderosa Pine[3], Red Pine[3]	2x4 or 5/4	2x10 or 3x4

[1] Assumes 300 lb concentrated load, L/288 deflection limit, No. 2 grade, and wet service conditions.
[2] Incising assumed for refractory species including Douglas fir-larch, hem-fir, and spruce-pine-fir.
[3] Design values based on northern species with no incising assumed.

Stair guards. Guards must be provided on all open sides of stairs consisting of more than 3 risers. Stair guards must comply with section 13 and Figure 32.

Figure 32
STAIR GUARDS

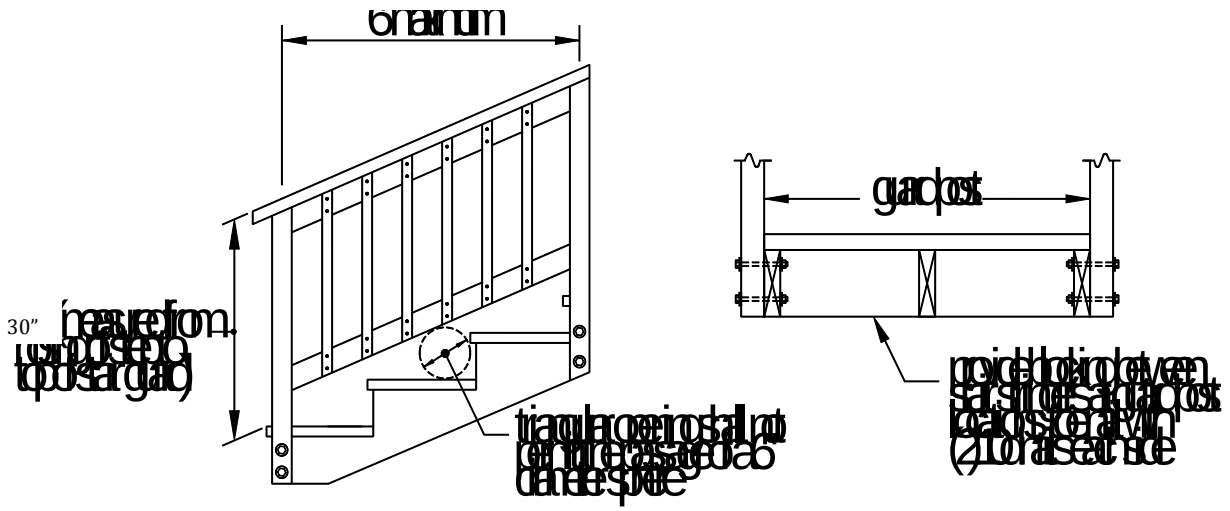

Stair handrails. A flight of stairs with more than 3 risers must have at least one handrail that complies with all of the following:

1. The handrail must be located at least 30 inches, but no more than 38 inches above the nosing of the treads – except that a volute, turnout, starting easing, or transition fitting may depart from these dimensions. Measurement must be taken from the nosing to the top of the rail.
2. The handrail must be attached to a stair guard or exterior wall acting as a barrier as shown in Figure 33.
3. The handrail and connecting hardware must be decay- and corrosion-resistant.
4. The handrail must have a smooth surface with no sharp corners and must be graspable, as shown in Figure 34. Recessed sections may be shaped from a 2x6 or five-quarter board, as shown there.
5. Handrails must run continuously from a point directly over the lowest riser to a point directly over the highest riser.
6. Handrails may be interrupted by guard posts.

Figure 33
STAIR HANDRAILS

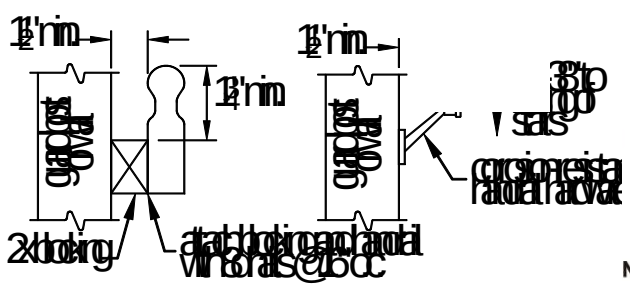

Figure 34
HANDRAIL GRASPABILITY

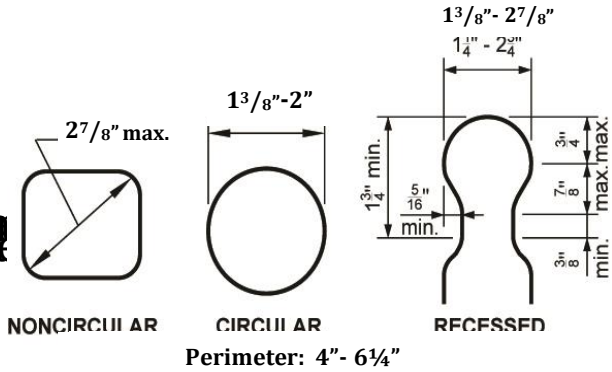

Spiral stairs. Stair dimensions above are for standard stairs secured in accordance with methods shown in this appendix. Spiral stairs are allowed at decks when designed in accordance with the provisions of Chapter SPS 321.04. Connection of spiral stairs to decks and the supporting load path

shall be designed in accordance with accepted engineering practices and with applicable provisions of the Uniform Dwelling Code.

SECTION 15: FRAMING PLAN

A typical framing plan shows a bird's-eye or plan view of the joist and beam layout; the location of the ledger board, diagonal bracing or hold-down devices, posts, and footings; and the type, size, and spacing of the ledger board fasteners. You can use the sample typical deck framing plan shown on the next page in combination with the requirements in this document to complete your deck.

Figure 35
TYPICAL DECK FRAMING PLAN

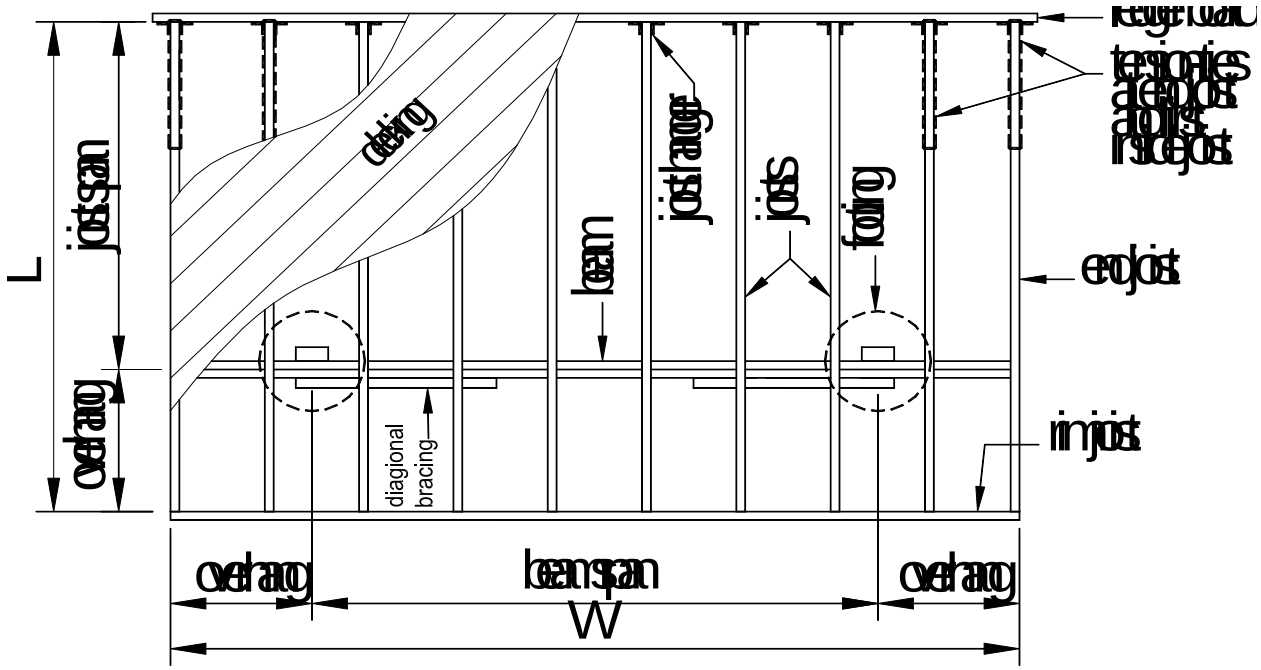

Decking: ☐ 2x4 ☐ 2x6 ☐ five-quarter board ☐ wood-plastic composite (per ASTM D 7032)
☐ Other decking, evaluation report number:_____

Joists: size: ☐ 2x6 ☐ 2x8 ☐ 2x10 ☐ 2x12 spacing: ☐ 12 in. ☐ 16 in. ☐ 24 in.
joist span dimension: _____ft. - _____in.
overhang: ☐ Yes ☐ No overhang dimension: _____ft. - _____in.
rim joist: ☐ 2x6 ☐ 2x8 ☐ 2x10 ☐ 2x12

Beam(s): number of plies: ☐ 2 ☐ 3 size: ☐ 2x6 ☐ 2x8 ☐ 2x10 ☐ 2x12
overhang: ☐ Yes ☐ No overhang dimension: _____ft. - _____in.

Posts: size: ☐ 4x4 ☐ 4x6 ☐ 6x6 height: _____ft. - _____in.

Footings: size:_____in. ☐ square ☐ round thickness: _____in.

Ledger: ledger board size: ☐ 2x8 ☐ 2x10 ☐ 2x12 ☐ Not applicable (free-standing deck)
fastener: ☐ Through bolt ☐ Lag screw ☐ Wood screw
☐ Expansion anchor ☐ Adhesive anchor

Lateral support: ☐ Tension-tie ☐ Diagonal bracing, size: ☐ 2x
(not permitted for free-standing deck)

Deck size: L=_____ft. - _____in. W=_____ft. - _____in.

SECTION 10. Chapters SPS 320 to 325 Appendix C is created to read:

Chapters SPS 320 – 325 Appendix C
Supplemental Deck Features and Reference Information

CONTENTS

1. Wood preservatives for ground contact.
2. Specifications for fasteners.
3. Sources of design values.
4. Joist spans for alternate wood species.
5. Framing around a chimney or bay window.
6. Attachment of ledger boards to metal-plate-connected wood floor trusses.

1. Wood preservatives for ground contact. The following Table lists common pressure-preservative treatments and retention levels, in pounds per cubic foot, for sawn lumber in ground contact – based on the American Wood Protection Association's *Book of Standards*.

Table C–1
PRESERVATIVE TREATMENTS AND RETENTION LEVELS FOR GROUND CONTACT (IN POUNDS PER CUBIC FOOT)

Species	ACQ-B	ACQ-C	ACQ-D	CA-B	CuN-W
Southern Pine	0.40	0.40	0.40	0.21	0.11
Douglas Fir-Larch	0.40	0.40	NR	0.21	0.11
Hem-Fir	0.40	0.40	0.40	0.21	0.11
Ponderosa Pine	0.40	0.40	0.40	0.21	0.11
Red Pine	0.40	0.40	0.40	0.21	0.11
Spruce-Pine-Fir	NR[1]	0.40	NR	NR	NR
Redwood	NR	NR	NR	NR	NR

[1]NR = treatment not recommended.

2. Sources of design values. The sources of the design values in Appendix B are as follows:

- Table 1 – Minimum footing sizes: The Building Inspectors Association of Southeast Wisconsin, December 2014.
- Table 2 – Maximum post heights: *Typical Deck Details, Based on the 2009 International Residential Code*, Fairfax County, Virginia, July 2013.
- Tables 3A and 3B – Maximum beam spans: *Design for Code Acceptance 6,* American Wood Council, May 2013.
- Table 4 – Maximum joist spans: *Design for Code Acceptance 6* (DCA 6), American Wood Council, May 2013; except for the 2x6 values, which are from the Building Inspectors Association of Southeast Wisconsin, December 2014.
- Table 5 – Minimum joist-hanger download capacity: *Design for Code Acceptance 6,* American Wood Council, May 2013; except for the 2x6 values, which are repeated from the 2x8 values.
- Table 6 – Ledger-board-fastener spacing: *Design for Code Acceptance 6,* American Wood Council, May 2013.
- Figure 29 – Stringer span length, and Table 7 – Minimum tread sizes: *Design for Code Acceptance 6,* American Wood Council, May 2013.

- Table C–2 – Maximum joist spans for redwood, western cedars, ponderosa pine, and red pine: *Design for Code Acceptance 6,* American Wood Council, May 2013; except for the 2x6 values, which are from the Building Inspectors Association of Southeast Wisconsin, December 2014.
- Table C–3 – Trimmer joist download capacity: *Design for Code Acceptance 6,* American Wood Council, May 2013.

3. Joist spans for alternate wood species. The following Table lists maximum joist-span lengths for redwood, western cedars, ponderosa pine, and red pine.

Table C–2
MAXIMUM JOIST-SPAN LENGTH[1] FOR REDWOOD, WESTERN CEDARS, PONDEROSA PINE[2], AND RED PINE[2]

Joist Spacing (on center)	Joist Size	Without Overhang	With Overhangs
12"	2x6	8'-5"	7'-3"
	2x8	11'-8"	8'-6"
	2x10	14'-11"	12'-3"
	2x12	17'-5"	16'-5"
16"	2x6	7'-8"	7'-3"
	2x8	10'-7"	8'-6"
	2x10	13'-0"	12'-3"
	2x12	15'-1"	15'-1"
24"	2x6	6'-7"	6'-7"
	2x8	8'-8"	8'-6"
	2x10	10'-7"	10'-7"
	2x12	12'-4"	12'-4"

[1]Spans are based on 40 psf live load, 10 psf dead load, normal loading duration, wet service conditions and deflections of Δ=L/360 for main span and L/180 for overhang with a 220-lb. point load.

[2]Design values based on northern species with no incising assumed.

4. Alternate beam and joist spans. The table on the following two pages lists alternate beam and joist spans and corresponding footing sizes from the Southeast Wisconsin Building Inspectors Association that can be used instead of the values in Appendix B.

Beam and Footing Sizes with Overhangs

Based on No. 2 or better Southern Pine, Douglas Fir-Larch[2], and Ponderosa Pine

Joist Length (JL)[1]		Post Spacing (Measured Center to Center)																																				
			4'			5'			6'			7'			8'			9'			10'			11'			12'			13'			14'					
6'		Southern Pine Beam	1-2x6			1-2x6			1-2x8			2-2x6			2-2x8			2-2x8			2-2x10			2-2x10			2-2x12			3-2x10			3-2x12					
		Douglas Fir-Larch Beam	1-2x6			1-2x8			1-2x8			2-2x8			2-2x8			2-2x10			2-2x10			2-2x12			2-2x12			3-2x10			3-2x12					
		Ponderosa Pine Beam	1-2x6			1-2x8			1-2x8			2-2x8			2-2x8			2-2x10			2-2x10			2-2x12			2-2x12			3-2x10			3-2x12					
		Corner Footing	8	7	6	9	8	7	10	8	7	11	9	8	11	9	8	12	10	9	12	10	9	13	11	9	14	11	10	14	12	10	15	12	10			
		Intermediate Footing	10	8	7	11	9	8	12	10	9	13	11	9	14	12	10	15	12	11	15	13	11	16	13	12	17	14	12	17	14	13	18	15	13			
		Footing Thickness	6			6			6			6			6			6			6			6			6			6			8					
7'		Southern Pine Beam	1-2x6			1-2x8			1-2x8			2-2x8			2-2x8			2-2x10			2-2x10			2-2x12			2-2x12			3-2x12			3-2x12					
		Douglas Fir-Larch Beam	1-2x6			1-2x8			2-2x6			2-2x8			2-2x8			2-2x10			2-2x10			2-2x12			3-2x10			3-2x12			3-2x12					
		Ponderosa Pine Beam	1-2x6			1-2x8			2-2x6			2-2x8			2-2x8			2-2x10			2-2x12			2-2x12			3-2x10			3-2x12			Eng Bm					
		Corner Footing	9	7	7	10	8	7	11	9	8	11	9	8	12	10	9	13	11	9	13	11	10	14	12	10	15	12	10	15	12	11	16	13	11			
		Intermediate Footing	11	9	8	12	10	9	13	11	9	14	12	10	15	12	11	16	13	11	17	14	12	17	14	12	18	15	13	19	15	13	19	16	14			
		Footing Thickness	6			6			6			6			6			6			6			6			8			8			8					
8'		Southern Pine Beam	1-2x6			1-2x8			2-2x6			2-2x8			2-2x8			2-2x10			2-2x12			2-2x12			3-2x12			3-2x12			Eng Bm					
		Douglas Fir-Larch Beam	1-2x6			1-2x8			2-2x8			2-2x8			2-2x10			2-2x10			2-2x12			2-2x12			3-2x12			3-2x12			Eng Bm					
		Ponderosa Pine Beam	1-2x6			1-2x8			2-2x8			2-2x8			2-2x10			2-2x10			2-2x12			3-2x10			3-2x12			3-2x12			Eng Bm					
		Corner Footing	10	8	7	10	9	8	11	9	8	12	10	9	13	11	9	14	11	10	14	12	10	15	12	11	15	13	11	16	13	12	17	14	12			
		Intermediate Footing	12	10	8	13	11	9	14	12	10	15	12	11	16	13	11	17	14	12	18	15	13	19	15	13	19	16	14	20	16	14	21	17	15			
		Footing Thickness	6			6			6			6			6			6			8			8			8			8			8					
9'		Southern Pine Beam	1-2x6			1-2x8			2-2x8			2-2x8			2-2x10			2-2x12			2-2x12			3-2x10			3-212			Eng Bm			Eng Bm					
		Douglas Fir-Larch Beam	1-2x8			1-2x8			2-2x8			2-2x8			2-2x10			2-2x12			2-2x12			3-2x12			3-2x12			Eng Bm			Eng Bm					
		Ponderosa Pine Beam	1-2x8			2-2x6			2-2x8			2-2x8			2-2x10			2-2x12			2-2x12			3-2x12			3-2x12			Eng Bm			Eng Bm					
		Corner Footing	10	8	7	11	9	8	12	10	9	13	11	9	14	11	9	14	12	10	15	12	11	16	13	11	16	13	12	17	14	12	18	14	13			
		Intermediate Footing	12	10	9	14	11	10	15	12	11	16	13	11	17	14	12	18	15	13	19	15	13	20	16	14	20	17	15	21	17	15	22	18	16			
		Footing Thickness	6			6			6			6			6			8			8			8			8			8			8					
10'		Southern Pine Beam	1-2x6			1-2x8			2-2x8			2-2x8			2-2x10			2-2x12			2-2x12			3-2x12			3-2x12			Eng Bm			Eng Bm					
		Douglas Fir-Larch Beam	1-2x8			2-2x6			2-2x8			2-2x10			2-2x10			2-2x12			3-2x10			3-2x12			3-2x12			Eng Bm			Eng Bm					
		Ponderosa Pine Beam	1-2x8			2-2x6			2-2x8			2-2x10			2-2x10			2-2x12			3-2x10			3-2x12			Eng Bm			Eng Bm			Eng Bm					
		Corner Footing	10	9	8	12	10	8	12	10	9	13	11	10	14	12	10	15	12	11	16	13	11	16	14	12	17	14	12	18	15	13	18	15	13			
		Intermediate Footing	13	11	9	14	12	10	15	13	11	17	14	12	18	15	13	19	15	13	20	16	14	21	17	15	21	18	15	22	18	16	23	19	16			
		Footing Thickness	6			6			6			6			8			8			8			8			8			8			10					
11'		Southern Pine Beam	1-2x8			2-2x6			2-2x8			2-2x10			2-2x10			2-2x12			3-2x12			3-2x12			Eng Bm			Eng Bm			Eng Bm					
		Douglas Fir-Larch Beam	1-2x8			2-2x8			2-2x8			2-2x10			2-2x10			2-2x12			3-2x12			3-2x12			Eng Bm			Eng Bm			Eng Bm					
		Ponderosa Pine Beam	1-2x8			2-2x6			2-2x8			2-2x10			2-2x12			2-2x12			3-2x12			3-2x12			Eng Bm			Eng Bm			Eng Bm					
		Corner Footing	11	9	8	12	10	9	13	11	9	14	12	10	15	12	11	16	13	11	16	14	12	17	14	12	18	15	13	19	15	13	19	16	14			
		Intermediate Footing	13	11	10	15	12	11	16	13	12	17	14	12	19	15	13	20	16	14	21	17	15	22	18	15	22	18	16	23	19	17	24	20	17			
		Footing Thickness	6			6			6			6			8			8			8			8			8			10			10					
12'		Southern Pine Beam	1-2x8			2-2x6			2-2x8			2-2x10			2-2x12			2-2x12			3-2x12			3-2x12			Eng Bm			Eng Bm			Eng Bm					
		Douglas Fir-Larch Beam	1-2x8			2-2x8			2-2x8			2-2x10			2-2x12			3-2x10			3-2x12			3-2x12			Eng Bm			Eng Bm			Eng Bm					
		Ponderosa Pine Beam	1-2x8			2-2x8			2-2x8			2-2x10			2-2x12			3-2x10			3-2x12			Eng Bm			Eng Bm			Eng Bm			Eng Bm					
		Corner Footing	11	9	8	12	10	9	14	11	9	15	12	10	15	13	11	16	13	12	17	14	12	18	15	13	19	15	13	19	16	14	20	17	14			
		Intermediate Footing	14	12	10	15	13	11	17	14	12	18	15	13	19	16	14	20	17	15	21	18	15	22	18	16	23	19	17	24	20	17	25	21	18			
		Footing Thickness	6			6			6			8			8			8			8			8			10			10			10					

Beam and Footing Sizes with Overhangs

Based on No. 2 or better Southern Pine, Douglas Fir-Larch[2], and Ponderosa Pine

Joist Length (JL)[1]		Post Spacing (Measured Center to Center) 4'	5'	6'	7'	8'	9'	10'	11'	12'	13'	14'
13'	Southern Pine Beam	1-2x8	2-2x8	2-2x8	2-2x10	2-2x12	3-2x10	3-2x12	Eng Bm	Eng Bm	Eng Bm	Eng Bm
13'	Douglas Fir-Larch Beam	1-2x8	2-2x8	2-2x10	2-2x10	2-2x12	3-2x10	3-2x12	Eng Bm	Eng Bm	Eng Bm	Eng Bm
13'	Ponderosa Pine Beam	1-2x8	2-2x8	2-2x10	2-2x10	2-2x12	3-2x12	3-2x12	Eng Bm	Eng Bm	Eng Bm	Eng Bm
13'	Corner Footing	12 10 8	13 11 9	14 12 10	15 12 11	16 13 12	17 14 12	18 15 13	19 15 13	19 16 14	20 17 14	21 17 15
13'	Intermediate Footing	14 12 10	16 13 12	17 14 13	19 15 13	20 16 14	21 17 15	22 18 16	23 19 17	24 20 17	25 21 18	26 21 19
13'	Footing Thickness	6	6	6	8	8	8	8	10	10	10	10
14'	Southern Pine Beam	1-2x8	2-2x8	2-2x8	2-2x10	2-2x12	3-2x12	3-2x12	Eng Bm	Eng Bm	Eng Bm	Eng Bm
14'	Douglas Fir-Larch Beam	1-2x8	2-2x8	2-2x10	2-2x10	2-2x12	3-2x12	3-2x12	Eng Bm	Eng Bm	Eng Bm	Eng Bm
14'	Ponderosa Pine Beam	1-2x8	2-2x8	2-2x10	2-2x12	2-2x12	3-2x12	Eng Bm	Eng Bm	Eng Bm	Eng Bm	Eng Bm
14'	Corner Footing	12 10 9	13 11 10	15 12 10	16 13 11	17 14 12	18 14 13	18 15 13	19 16 14	20 17 14	21 17 15	22 18 15
14'	Intermediate Footing	15 12 11	17 14 12	18 15 13	19 16 14	21 17 15	22 18 16	23 19 16	24 20 17	25 21 18	26 21 19	27 22 19
14'	Footing Thickness	6	6	8	8	8	8	10	10	10	10	10
15'	Southern Pine Beam	1-2x8	2-2x8	2-2x10	2-2x12	2-2x12	3-2x12	3-2x12	Eng Bm	Eng Bm	Eng Bm	Eng Bm
15'	Douglas Fir-Larch Beam	2-2x6	2-2x8	2-2x10	2-2x12	2-2x12	3-2x12	Eng Bm	Eng Bm	Eng Bm	Eng Bm	Eng Bm
15'	Ponderosa Pine Beam	2-2x6	2-2x8	2-2x10	2-2x12	3-2x10	3-2x12	Eng Bm	Eng Bm	Eng Bm	Eng Bm	Eng Bm
15'	Corner Footing	12 10 9	14 11 10	15 12 11	16 13 12	17 14 12	18 15 13	19 16 14	20 16 14	21 17 15	22 18 15	22 18 16
15'	Intermediate Footing	15 13 11	17 14 12	19 15 13	20 17 14	21 18 15	23 19 16	24 20 17	25 21 18	26 21 19	27 22 19	28 23 20
15'	Footing Thickness	6	6	8	8	8	10	10	10	10	10	12
16'	Southern Pine Beam	1-2x8	2-2x8	2-2x10	2-2x12	3-2x10	3-2x12	Eng Bm	Eng Bm	Eng Bm	Eng Bm	Eng Bm
16'	Douglas Fir-Larch Beam	2-2x6	2-2x8	2-2x10	2-2x12	3-2x10	3-2x12	Eng Bm	Eng Bm	Eng Bm	Eng Bm	Eng Bm
16'	Ponderosa Pine Beam	2-2x6	2-2x8	2-2x10	2-2x12	3-2x12	3-2x12	Eng Bm	Eng Bm	Eng Bm	Eng Bm	Eng Bm
16'	Corner Footing	13 11 9	14 12 10	15 13 11	17 14 12	18 15 13	19 15 13	20 16 14	20 17 15	21 18 15	22 18 16	23 19 16
16'	Intermediate Footing	16 13 11	18 15 13	19 16 14	21 17 15	22 18 16	23 19 17	25 20 18	26 21 18	27 22 19	28 23 20	29 24 21
16'	Footing Thickness	6	8	8	8	8	10	10	10	10	12	12

Notes:

1. Joist Length (J_L) is Joist Span (L_J) plus any cantilever at the beam that is being sized.
2. Incising assumed for refractory species Douglas Fir-Larch.
3. All footing sizes above are base diameters (in inches) and are listed for THREE SOIL CAPACITIES. Soil capacity is based on the requirements of State of Wisconsin SPS 321.15 (3).[4]
4. For square footings, insert the diameter (d) into the following formula: $\sqrt{((d/2)^2 \times \pi)}$. This number will give you the square dimension and shall be rounded up to the nearest inch.

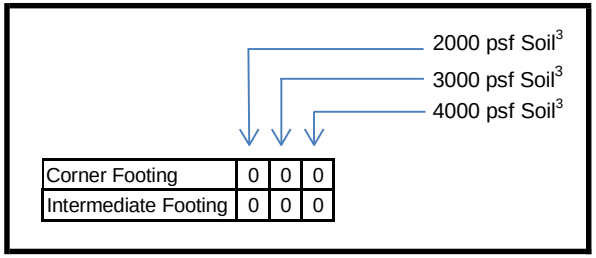

5. Framing around a chimney or bay window. All members at a chimney or bay window must be framed in accordance with Figure C–1. Headers may span a maximum of 6'-0". Where a chimney or bay window is wider than 6'-0", one or more 6x6 posts may be added to reduce header spans to less than 6'-0". In such cases, the post footing must meet the requirements in section 2 of Appendix B. Plan submittal and approval is required for headers with a span length greater than 6'-0". Headers must be located no more than 3'-0" from the end of the trimmer joist.

Triple trimmer joists are required on each side of the header if joist spacing is 12" or 16" o.c. or if the trimmer joist span exceeds 8'-6"; otherwise, double trimmer joists are permitted. Trimmer joists may bear on the beam and extend past the beam centerline up to $L_J/4$ as shown in Figures 5 and 7 in Appendix B, or the trimmer joist may attach to the side of the beam with joist hangers as shown in Figure 6 in Appendix B. Joist hangers must each have a minimum download capacity in accordance with Table C–3. Bolts or lag screws used to attach the hanger to the ledger must fully extend through the ledger into the 2-inch nominal lumber band joist (1½" actual) or the EWP rim board. See Figure 15 in Appendix B for fastener spacing, and edge and end distances. Otherwise a free-standing deck is required.

Figure C–1
DETAIL FOR FRAMING AROUND A CHIMNEY OR BAY WINDOW

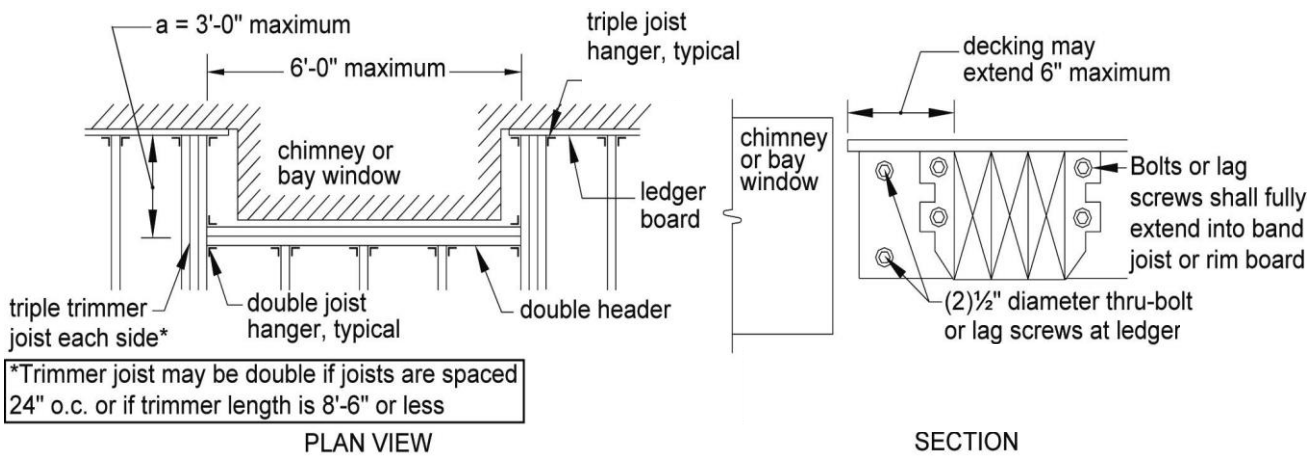

Table C–3
TRIMMER JOIST HANGER DOWNLOAD CAPACITY

Joist Size	Minimum Capacity, lbs
2x8	1050
2x10	1380
2x12	1500

6. Attachment of ledger boards to metal-plate-connected wood floor trusses. The research report on the following pages shows acceptable methods for attaching a ledger board to a metal-plate-connected wood-floor-truss system.

File reference: SPS 320-325/Rules decks 11_department

(Page intentionally skipped.)

Attachment of Residential Deck Ledger to Metal Plate Connected Wood Truss Floor System

SRR No. 1408-01

Prepared for SBCA

Report Written by:

Jim Vogt, P.E.

October 1, 2014

Table of Contents

Introduction ..... **page 3**

Key Definitions ..... **page 3**

Background ..... **page 3**

Application ..... **page 4**

Installation ..... **page 4**

Findings ..... **page 11**

References and Substantiating Data ..... **page 11**

Introduction:

This research report provides construction details for residential deck ledger attachment to metal plate connected wood truss floor systems. The applicable codes and standards follow the *2009* and *2012 International Building Code* (*IBC*) and the *2009* and *2012 International Residential Code* (*IRC*). Proper attachment of the deck ledger to the house is critical for ensuring that an "attached" deck is safely and securely supported at this location. This report provides details for attaching a 2" nominal lumber deck ledger to residential floor systems constructed with metal plate connected wood (MPCW) floor trusses.

Key Definitions:

Deck Ledger – A horizontal lumber beam attached to an existing wall and used to tie in construction elements such as porch roofs and decks. A deck ledger is installed as part of the deck frame construction and supports one end of the deck joists.

Truss – An engineered structural component, assembled from wood members, metal connector plates and other mechanical fasteners, designed to carry its own weight and superimposed design loads. The truss members form a semi-rigid structural framework and are assembled such that the members form triangles.

Wood Structural Panel (WSP) – A panel manufactured from wood veneers, strands or wafers or a combination of veneer and wood strands or wafers bonded together with waterproof synthetic resins or other suitable bonding systems. Examples include: plywood, Oriented Strand Board (OSB), waferboard and composite panels.

Background:

The *2009* and *2012 IRC* include prescriptive provisions for attaching a 2" nominal lumber deck ledger to a 2" nominal lumber band joist bearing directly on a sill plate or wall plate using ½"-diameter bolts or lag screws. AF&PA's American Wood Council, in cooperation with the International Code Council, has also developed *Design for Code Acceptance No. 6* (*DCA6*) – *Prescriptive Residential Deck Construction Guide*, available at awc.org.

The prescriptive provisions for the deck ledger connection to the band joist in the *IRC* and *DCA6* are based on the results from a series of ultimate load tests conducted at Virginia Polytechnic Institute and State University (VT) Department of Wood Science and Forest Products, and Washington State University (WSU) Wood Materials and Engineering Laboratory. This testing evaluated the capacity 2" nominal pressure-preservative-treated (PPT) Hem-Fir (HF) and Southern Pine (SP) ledgers attached to either 2" nominal Spruce-Pine-Fir (SPF) or 1" net Douglas-Fir (DF) laminated veneer lumber (LVL) band joists, through $^{15}/_{32}$"-thick oriented strand board (OSB) sheathing, with ½"-diameter hot-dipped galvanized (HDG) bolts or lag screws, meeting the requirements *of ANSI/ASME Standard B18.2.1*.

The deck ledger assemblies evaluated at VT and WSU were deemed to represent commonly accepted means of connecting deck ledgers to band joints that cannot be evaluated using the provisions of the *National Design Specification® for Wood Construction* (*NDS®*) because:

1. The ledger is not in direct contact with the band joist (i.e., separated by $^{15}/_{32}$" OSB sheathing).
2. The minimum required penetration depth of four diameters (4D) is not met when using ½"-diameter lag screws into an $1^{1}/_{2}$"-thick band joist.

Application:

The details and fastener spacing tables provided in this report for connecting a 2" nominal lumber deck ledger to a residential floor system constructed with MPCW trusses use a single shear reference lateral design value, Z, of 710 lbs. for a ½"-diameter bolt and 375 lbs. for a ½" x 6" lag screw. These lateral design values were developed from the VT and WSU testing, and assume the fasteners are installed in accordance with the *NDS* requirements for clearance holes, lead holes, edge distance and end distance.

Detail 1 includes construction information for attaching 2" nominal lumber deck ledgers to the ends of MPCW floor trusses spaced no more than 24" o.c. Table 1 provides the maximum on-center spacing for each ½"-diameter bolt or ½" x 6" lag screw used to attach the ledger to the floor truss system for deck joist spans up to 18', assuming a design deck load of 40 psf live load (or 40 psf snow load) and 10 psf dead load. Table 2 includes similar information as Table 1, except for a design deck load of 60 psf live load (or 60 psf snow load) and 10 psf dead load.

Detail 2 includes construction information for attaching 2" nominal lumber deck ledgers to the side of a MPCW floor ladder frame with 4x4 vertical webs spaced no more than 16" o.c. Table 3 provides the maximum on-center spacing for each ½"-diameter bolt and ½" x 6" lag screw used to attach the ledger to the ladder frame for deck joist spans up to 18', assuming a design deck load of 40 psf live load (or 40 psf snow load) and 10 psf dead load. Table 4 includes similar information as Table 3, except for a design deck load of 60 psf live load (or 60 psf snow load) and 10 psf dead load.

Detail 3 includes deck lateral load connection options capable of resisting the 1500 lbf lateral load requirement specified in *2009* and *2012 IRC* Section 507.

Support of concentrated loads from deck beams of girders are beyond the scope of this report. Deck ledgers shall not be supported on stone or masonry veneer.

Installation:

The following is a summary of the minimum requirements and limitations for installing a 2" nominal lumber deck ledger with residential floor systems constructed with MPCW floor trusses.

1. Ledger must be 2x10 or 2x12 PPT or code-approved decay-resistant lumber with a specific gravity, G $\geq$ 0.43. Ledger shall be identified by the grade mark of, or certificate of inspection issued by, an approved lumber grading or inspection bureau or agency. PPT material must be pressure-treated with an approved process in accordance with American Wood Protection Association standards
2. Install ledger directly over wood structural sheathing ($^{15}/_{32}$" maximum thickness) fastened to the wall per the building code.
3. Attach ledger through wood structural sheathing into 2-ply 2x4 truss end vertical, 4x4 vertical web or key-block with ½" x 6" lag screws or ½"-diameter bolts with washers and nuts.

    3.1 Only one (1) fastener into each truss member or key-block.

    3.2 Install each fastener through the centerline of the truss member or key-block and position so as not to interfere with bottom and top chord joints and connector plates. Refer to Detail 1 and Detail 2 for spacing requirements

    3.3 Lag screws and bolts shall be installed according to *2005 NDS* requirements. A "test" installation is recommended before drilling the lead holes, to ensure that the lead holes are neither too small nor too large.

- ½" x 6" lag screws:
  - Lead holes for the threaded portion shall be $^{5}/_{16}$".
  - Clearance holes shall be ½" and the same depth of penetration as the length of unthreaded shank.
- ½"-diameter bolts:
  - Holes shall be a minimum of $^{17}/_{32}$" to a maximum of $^{9}/_{16}$".

All fasteners used with PPT wood shall be hot-dip zinc-coated galvanized steel, stainless steel, silicon bronze, or copper. Fasteners to be hot-dipped galvanized shall meet the requirements of *ASTM A153 – Standard Specification for Zinc Coating (Hot-Dip) on Iron and Steel Hardware*, Class D, for fasteners $^{3}/_{8}$" diameter and smaller or Class C for fasteners with diameters over $^{3}/_{8}$". Lag screws, bolts, nuts and washers are permitted to be mechanically deposited zinc-coated steel with coating weights in accordance with *ASTM B695*, Class 55, minimum.

All hardware (e.g., joist hangers, hold-down devise, etc.) shall be galvanized or shall be stainless steel. Hardware to be hot-dipped prior to fabrication shall meet *ASTM A653 – Standard Specification for Steel Sheet, Zinc-Coated (Galvanized) or Zinc-Iron Alloy-Coated (Galvannealed) by the Hot-Dip Process,* G-185 coating. Hardware to be hot-dipped galvanized after fabrication shall meet *ASTM A123 – Specification for Zinc (Hot-Dip Galvanized) Coatings on Iron and Steel Products*.

- Fasteners and hardware exposed to saltwater or located within 300' of a salt water shoreline shall be stainless steel grade 304 or 316.
- Fasteners and hardware shall be of the same corrosion-resistant material.
- Other coated or non-ferrous fasteners or hardware shall be as approved by the authority having jurisdiction.

4. Install flashing at top of ledger for water tightness. Flashing shall be corrosion-resistant metal of minimum nominal 0.019" thickness or an approved non-metallic material. Do not use aluminum flashing in direct contact with lumber treated with preservatives containing copper, such as ACQ, Copper Azole or ACZA.
5. Two-ply 2x4 truss end verticals, 4x4 truss vertical webs and key-blocks connected to ledger with lag screws or bolts shall have a specific gravity, G ≥ 0.42 (includes DF, HF, SP and SPF).
   - Construct key-blocks with minimum 2x4 No. 2 or better lumber.
   - Install key-blocks at required locations. Cut to fit tight.
   - Refer to Detail 1 and Detail 2 for additional information concerning key-block construction and attachment.

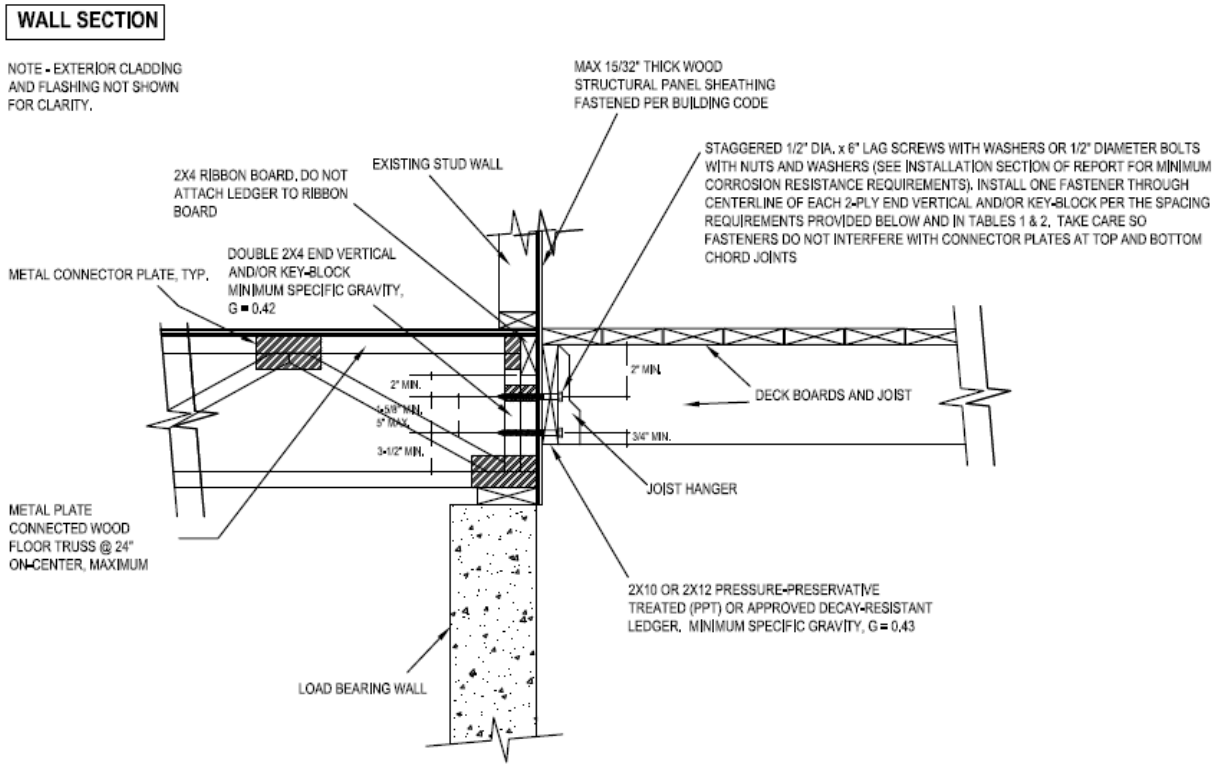

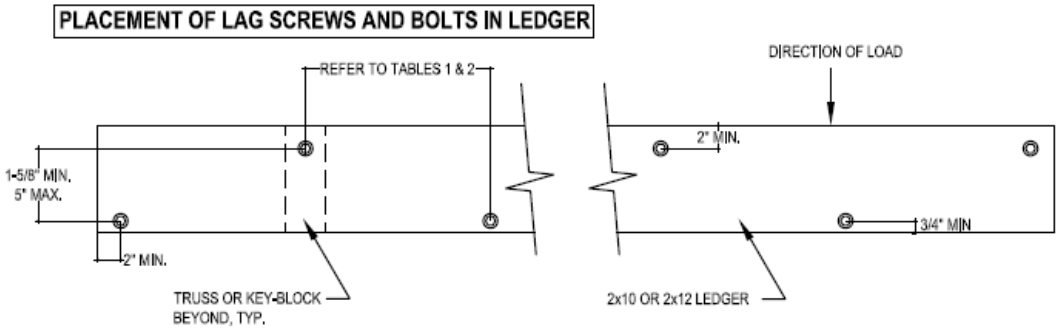

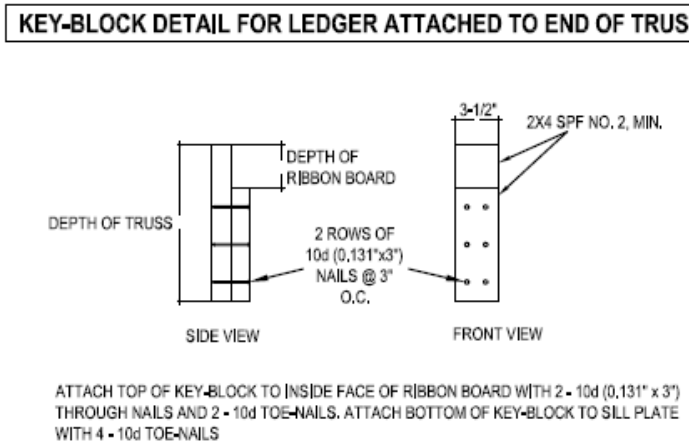

Detail 1: Attachment of Deck Ledger to Floor System with MPCW Trusses

Joist Span	≤ to 6'	6'-1" to 8'	8'-1" to 10'	10'-1" to 12'	12'-1" to 14'	14'-1" to 16'	16'-1" to 18'
Connection Details	On-center Spacing of Fasteners (in.)[4]						
½"x 6" lag screw with 15/32",max., wood structural panel sheathing	24	12[5]	12[5]	12[5]	12[5]	8[6]	8[6]
½" diameter bolt with 15/32", max., wood structural panel sheathing	24	24	24	24	24	12[5]	12[5]

1. Ledgers shall be flashed in accordance with applicable building code requirements to prevent water from contacting the exposed wood structural sheathing and floor truss.
2. Snow load shall not be assumed to act concurrently with live load.
3. Ledgers must be 2x10 or 2x12 PPT or code-approved decay-resistant lumber with specific gravity, G ≥ 0.43. Truss 2-ply 2x4 end verticals and key-blocks must have a G ≥ 0.42.
4. Stagger lag screws and bolts as shown in Detail 1.
5. Requires key-blocks at 24" o.c., maximum. Attach ledger to 2-ply end vertical of each truss with one (1) fastener and to each key-block with one (1) fastener. Refer to Detail 1 for key-block construction and installation information.
6. Requires two (2) key-blocks at 8" o.c., maximum, between each truss. Attach ledger to 2-ply end vertical of each truss with one (1) fastener and to each key-block with one (1) fastener. Refer to Detail 1 for key-block construction and installation information.

Table 1: Deck Ledger Connection to Ends of MPCW Floor Trusses Spaced 24" o.c., Max.[1,2,3]
(Deck Live Load = 40 psf, Deck Dead Load = 10 psf, Snow Load ≤ 40 psf)

Joist Span	≤ to 6'	6'-1" to 8'	8'-1" to 10'	10'-1" to 12'	12'-1" to 14'	14'-1" to 16'	16'-1" to 18'
Connection Details	On-center Spacing of Fasteners (in.)[4]						
½" x 6" lag screw with 15/32",max., wood structural sheathing	12[5]	12[5]	12[5]	8[6]	8[6]	8[6]	Use bolted connection
½" diameter bolt with 15/32", max., wood structural sheathing	24	24	24	12[5]	12[5]	12[5]	12[5]

1. Ledgers shall be flashed in accordance with applicable building code requirements to prevent water from contacting the exposed wood structural sheathing and floor truss.
2. Snow load shall not be assumed to act concurrently with live load.
3. Ledgers must be 2x10 or 2x12 PPT or code-approved decay-resistant lumber with specific gravity, G ≥ 0.43. Truss 2-ply 2x4 end verticals and key-blocks must have a G ≥ 0.42.
4. Stagger lag screws and bolts as shown in Detail 1.
5. Requires key-blocks at 24" o.c., maximum. Attach ledger to 2-ply end vertical of each truss with one (1) fastener and to each key-block with one (1) fastener. Refer to Detail 1 for key-block construction and installation information.
6. Requires two (2) key-blocks at 8" o.c., maximum, between each truss. Attach ledger to 2-ply end vertical of each truss with one (1) fastener and to each key-block with one (1) fastener. Refer to Detail 1 for key-block construction and installation information.

Table 2: Deck Ledger Connection to Ends of MPCW Floor Trusses Spaced 24" o.c., Max.[1,2,3]
(Deck Live Load = 60 psf, Deck Dead Load = 10 psf, Snow Load ≤ 60 psf)

WALL SECTION

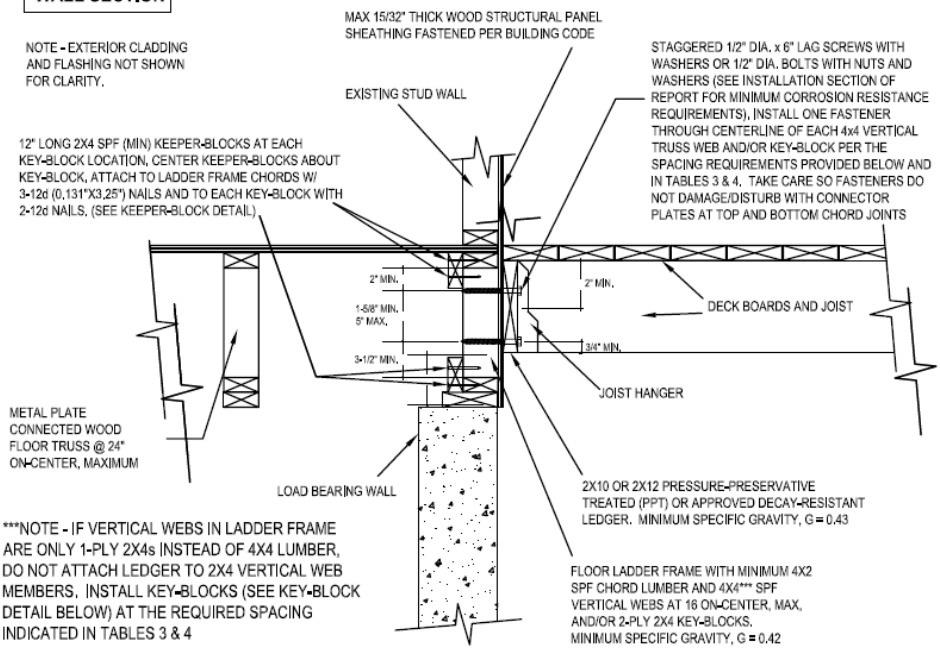

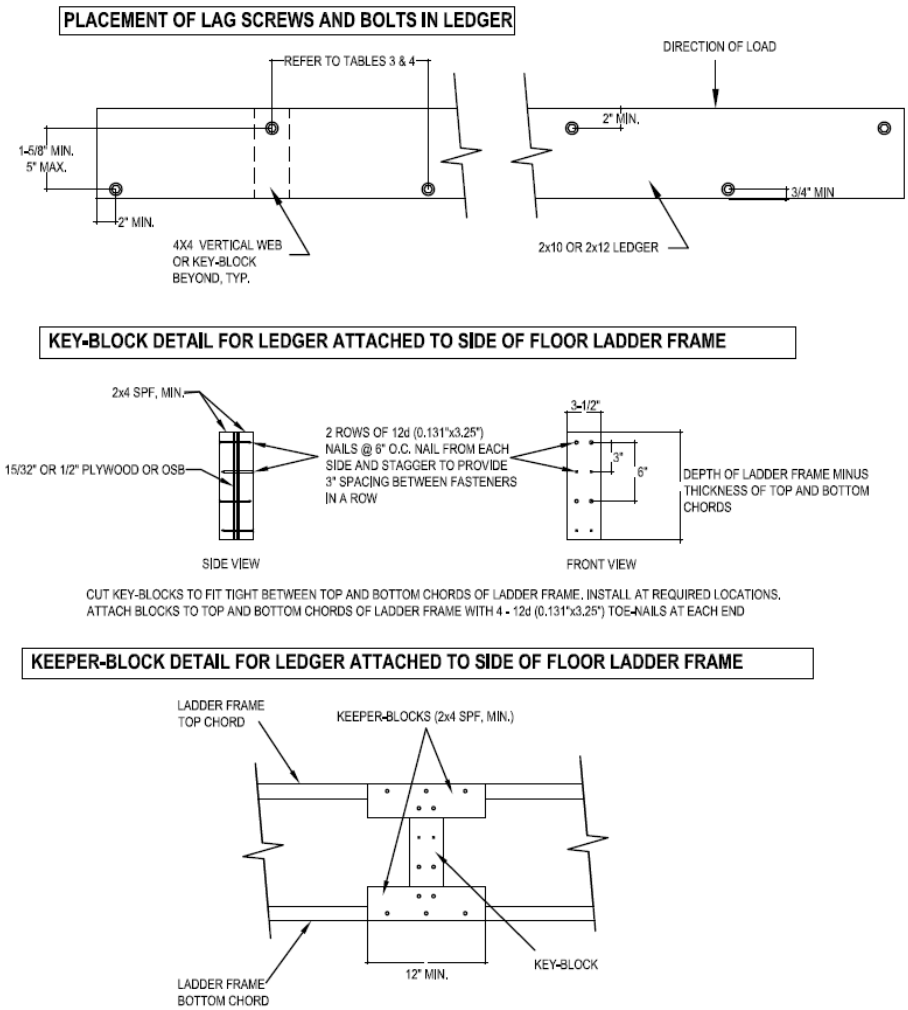

Detail 2: Attachment of Deck Ledger to Floor System with MPCW Trusses,
When Ledger is Installed Parallel to Truss Span & Spacing of Screws is Less Than the Spacing of the Verticals

Joist Span	< 6' to 8'	8'-1" to 10'	10'-1" to 12'	12'-1" to 14'	14'-1" to 16'	16'-1" to 18'
Connection Details	On-center Spacing of Fasteners (in.)[4]					
½" x 6" lag screw with 15/32",max., wood structural sheathing	16	16	8[5]	8[5]	8[5]	8[5]
½" diameter bolt with 15/32", max., wood structural sheathing	32	32	16	16	16	16

1. Ledgers shall be flashed in accordance with applicable building code requirements to prevent water from contacting the exposed wood structural sheathing and floor truss.
2. Snow load shall not be assumed to act concurrently with live load.
3. Ledgers must be 2x10 or 2x12 PPT or code-approved decay-resistant lumber with specific gravity, G > 0.43. Truss 4x4 vertical web and key-blocks must have a G > 0.42.
4. Stagger lag screws and bolts as shown in Detail 2.
5. Requires key-blocks at 16" o.c., maximum. Attach ledger to each 4x4 vertical web with one (1) fastener and to each key-block with one (1) fastener. Refer to Detail 2 for key-block construction and installation information.

Table 3: Deck Ledger Connection to Side of MPCW Floor Ladder Frame with 4s4 Vertical Webs Spaced at 16" o.c., Max.[1,2,3]

(Deck Live Load = 40 psf, Deck Dead Load = 10 psf, Snow Load $\leq$ 40 psf)

Joist Span	< 6' to 8'	8'-1" to 10'	10'-1" to 12'	12'-1" to 14'	14'-1" to 16'	16'-1" to 18'
Connection Details	On-center Spacing of Fasteners (in.)[4]					
½" x 6" lag screw with 15/32",max., wood structural sheathing	16	8[5]	8[5]	8[5]	8[5]	Use bolted connection
½" diameter bolt with 15/32", max., wood structural sheathing	32	16	16	16	8[5]	8[5]

1. Ledgers shall be flashed in accordance with applicable building code requirements to prevent water from contacting the exposed wood structural sheathing and floor truss.
2. Snow load shall not be assumed to act concurrently with live load.
3. Ledgers must be 2x10 or 2x12 PPT or code-approved decay-resistant lumber with specific gravity, G > 0.43. Truss 4x4 vertical web and key-blocks must have a G > 0.42.
4. Stagger lag screws and bolts as shown in Detail 2.
5. Requires key-blocks at 16" o.c., maximum. Attach ledger to each 4x4 vertical web with one (1) fastener and to each key-block with one (1) fastener. Refer to Detail 2 for key-block construction and installation information.

Table 4: Deck Ledger Connection to Side of MPCW Floor Ladder Frame with 4x4 Vertical Webs Spaced at 16" o.c., Max.[1,2,3]

(Deck Live Load = 60 psf, Deck Dead Load = 10 psf, Snow Load $\leq$ 60 psf)

LEDGER ATTACHED TO ENDS OF TRUSSES

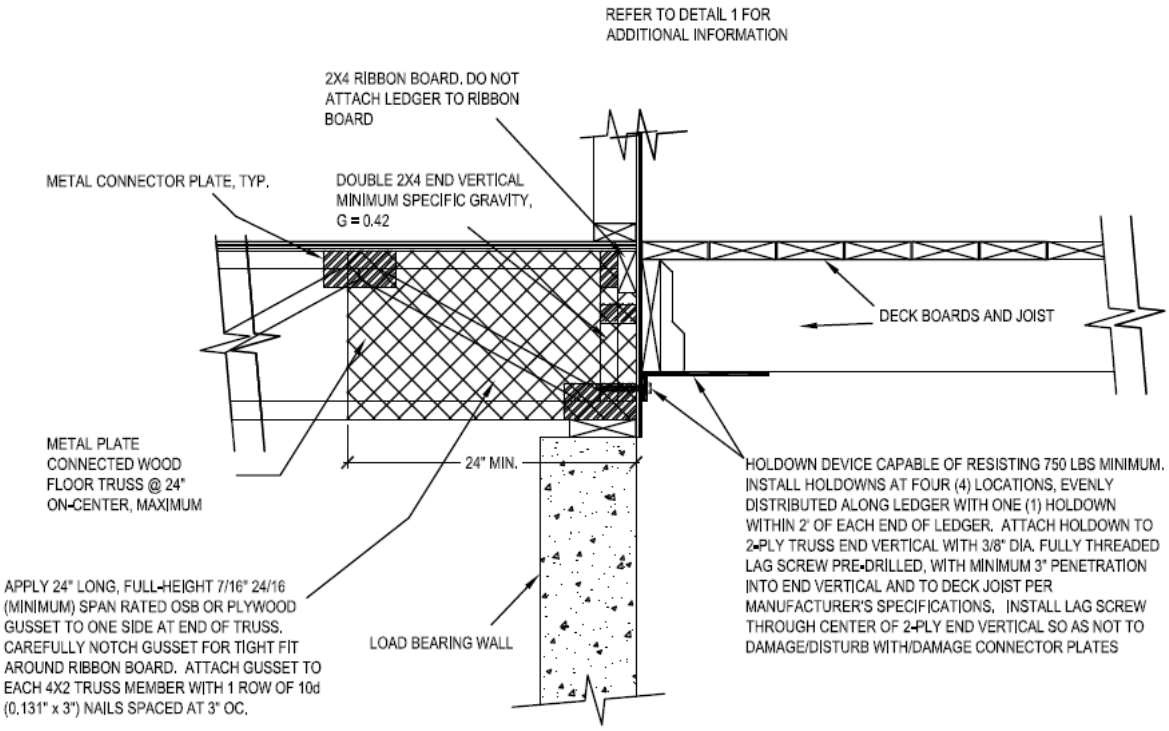

LEDGER ATTACHED TO SIDE OF FLOOR LADDER FRAME

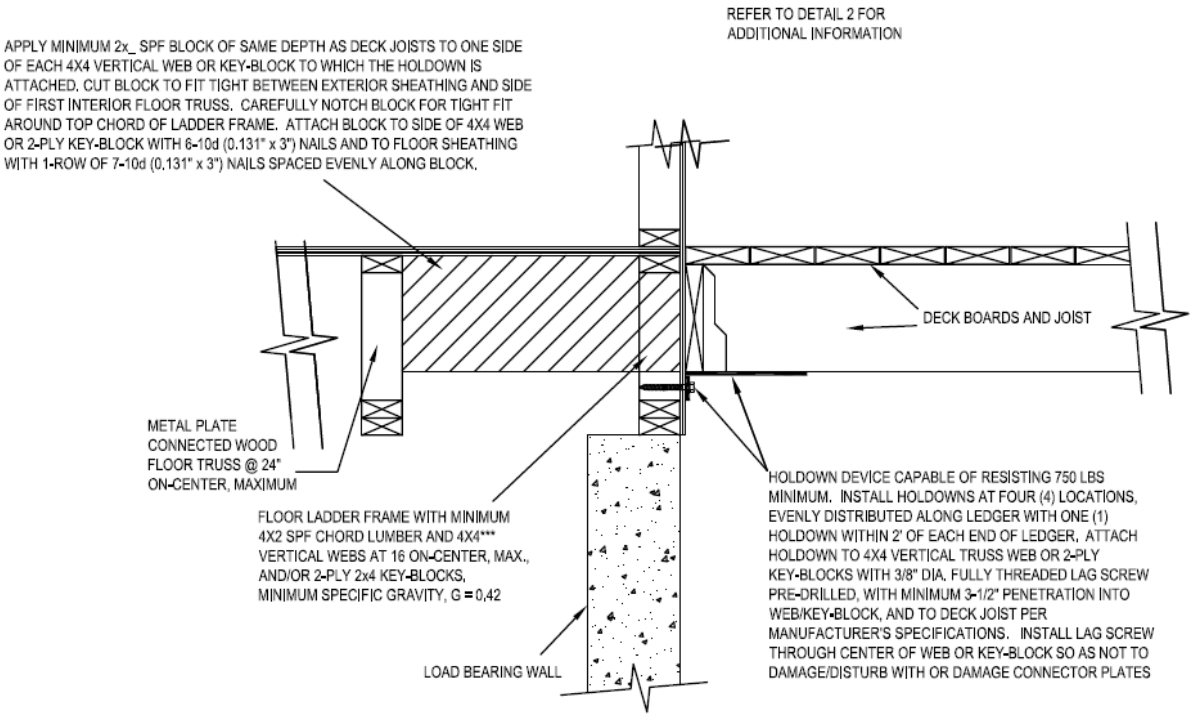

Findings:

Nailing deck ledgers to metal plate connected wood truss floor systems is not sufficient. The deck ledger must be attached to the truss or key-block with lag screws or bolts. Various options and connection details for achieving the connection of the deck ledger to the metal plate connected wood truss floor system are provided in this report, which may be referred to by the building designer to achieve a code-conforming deck ledger connection.

IBC Section 104.11 and *IRC* Section R104.11 (*IFC* Section 104.9 is similar) state:

> **104.11 Alternative materials, design and methods of construction and equipment.** The provisions of this code are not intended to prevent the installation of any material or to prohibit any design or method of construction not specifically prescribed by this code, provided that any such alternative has been *approved*. An alternative material, design or method of construction shall be *approved* where the *building official* finds that the proposed design is satisfactory and complies with the intent of the provisions of this code, and that the material, method or work offered is, for the purpose intended, at least the equivalent of that prescribed in this code. … Where the alternative material, design or method of construction is not *approved*, the *building official* shall respond in writing, stating the reasons the alternative was not *approved*.[1]

This research report is subject to periodic review and revision. For the most recent version of this report, visit sbcindustry.com. For information on the current status of this report, contact SBCA.

References and Substantiating Data:

Anderson, C.A., Woeste, F.E. and Loferski, J.R. 2003; *Manual for the Inspection of Residential Wood Decks and Balconies*; Forest Products Society, 2801 Marshall Ct., Madison, WI 53705.

ANSI/AWC NDS-2012, *ASD/LRFD NDS®*; *National Design Specification for Wood Construction*. 2012; American Wood Council, 222 Catoctin Circle, SE, Suite 201, Leesburg, VA 20175.

Carradine, D.M., Bender, D., Loferski, J.R. and Woeste, F.E. 2005; Residential Deck Ledger Design; *Building Safety Journal*, December, 2005: (4-7).

Carradine, D.M., Bender, D., Loferski, J.R. and Woeste, F.E. 2006; Residential Deck Ledger Connection Testing and Design; *Structure Magazine*, May, 2008: (53-56).

Design for Code Acceptance, DCA 6, Prescriptive Residential Wood Deck Construction Guide; 2009; American Wood Council, 222 Catoctin Circle, SE, Suite 201, Leesburg, VA 20175.

Loferski, J.R., Woeste, F.E., Caudill, R., Platt, T. and Smith, Q. 2004; Load-Tested Deck Ledger Connections; *Journal of Light Construction*. 22(6):71-78.

Woeste, F.E. 2008; Safe and Durable Coastal Decks; *Coastal Contractor*, March/April, 2008: (1-7).

[1] The last sentence is adopted language in the 2015 codes.

SECTION 11. EFFECTIVE DATE. The rules adopted in this order shall take effect on the first day of the month following publication in the Wisconsin administrative register, pursuant to s. 227.22 (2) (intro.), Stats.

(END OF TEXT OF RULE)

Dated _____ Agency _____

(Member of the Board or Secretary)
(board or department name)