Removed by Register November 2004 No. 587. For current adm. code see: http://docs.legis.wisconsin.gov/code/admin_code.



# Chapter Comm 82

## APPENDIX

The material contained in this appendix is for clarification purposes only. The notes, illustrations, etc., are numbered to correspond to the number of the rule as it appears in the text of the code.

**A–82.11 (29)** BRANCH INTERVALS.

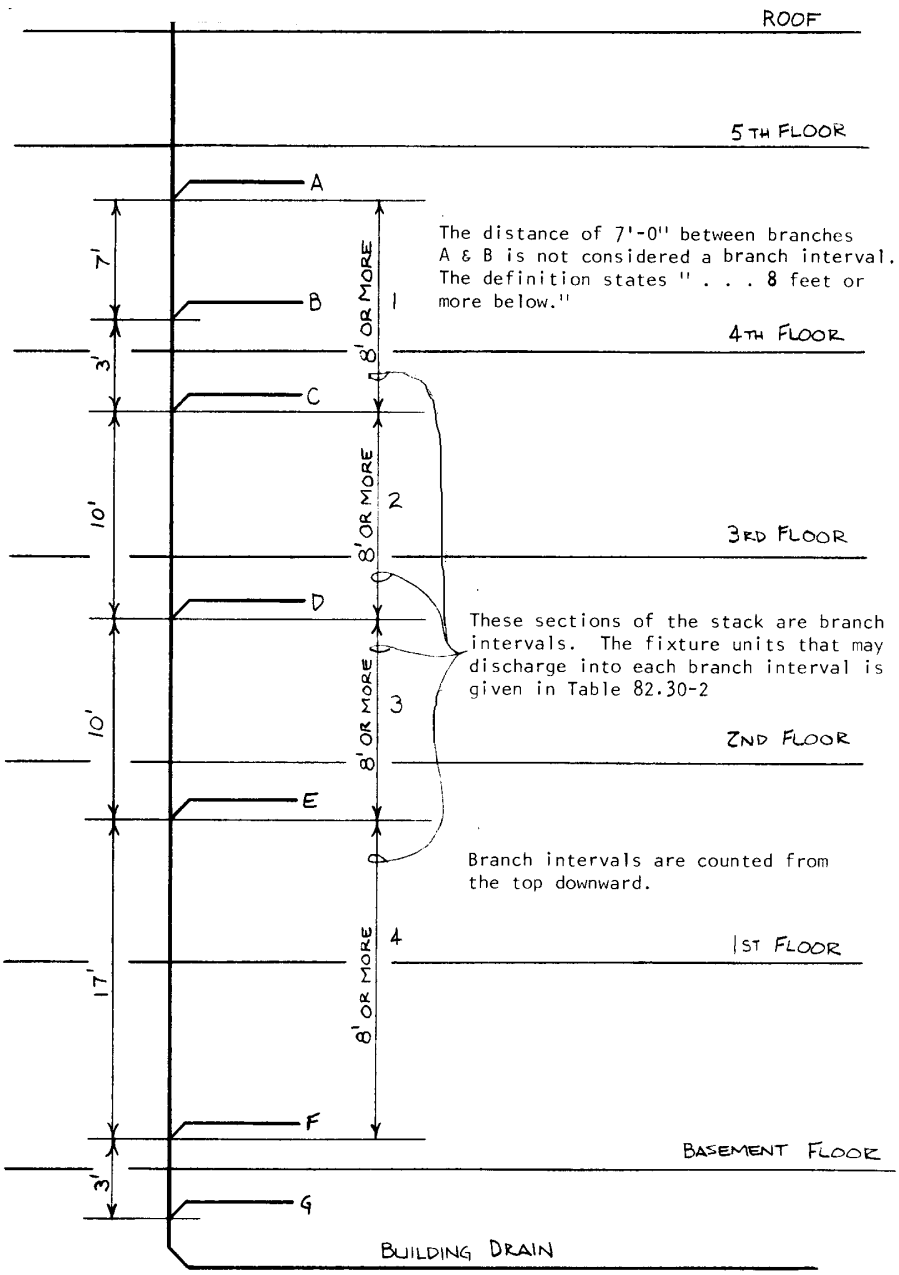

Removed by Register November 2004 No. 587. For current adm. code see: http://docs.legis.wisconsin.gov/code/admin_code.



**A–82.11 (140)** SPRINGLINE OF PIPE

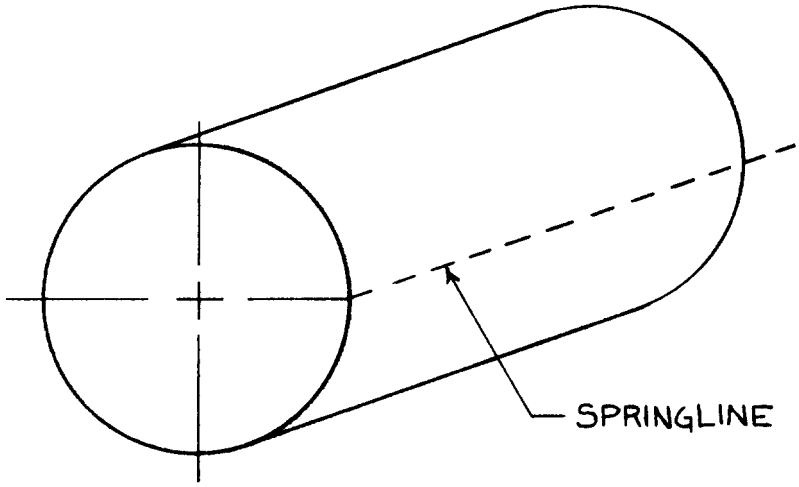


On a round pipe the springline is along the horizontal centerline.

Removed by Register November 2004 No. 587. For current adm. code see: http://docs.legis.wisconsin.gov/code/admin_code.



**A−82.20 (2)** AGENT MUNICIPALITIES. The department has designated the following municipalities the authority to review and approve plumbing plans and specifications for those plumbing installations located within the boundary limits of the municipality and which require approval under s. Comm 82.20.

**Note:** This list is maintained by the department and is subject to change.

Appleton, City of
100 N. Appleton St.
Appleton, WI 54911−4799
Phone (920) 832−6419
FAX (920) 832−6464

Eau Claire, City of
203 S. Farwell St.
Eau Claire, WI 54702
Phone (715) 839−4947
FAX (715) 839−4939

Green Bay, City of
100 N. Jefferson St., Rm. 403
Green Bay, WI 54301
Phone (920) 448−3296
FAX (920) 448−3117

Greenfield, City of
7325 W. Forest Home Ave.
Greenfield, WI 53220
Phone (414) 329−5328
FAX (414) 543−9615

Janesville, City of
18 N. Jackson St.
PO Box 5005
Janesville, WI 53547−5005
Phone (608) 755−3064
FAX (608) 755−3196

Kenosha, City of
Dept. of Housing
625 52nd St., Rm. 100
Kenosha, WI 53144
Phone (262) 653−4263
FAX (262) 653−4254

Madison, City of
215 Martin Luther King Jr. Blvd.
PO Box 2984
Madison, WI 53701−2984
Phone (608) 266−4561
FAX (608) 266−6377

Milwaukee, City of
Municipal Bldg., Rm. 1017
809 N. Broadway St.
Milwaukee, WI 53202
Phone (414) 286−3116
FAX (414) 286−8667

Oak Creek, City of
Public Works Inspection Div.
8640 S. Howell Ave.
Oak Creek, WI 53154
Phone (414) 768−6547
FAX (414) 768−9587

Oshkosh, City of
215 Church Ave.
Oshkosh, WI 54901
Phone (920) 236−5052
FAX (920) 236−5084

Racine, City of
730 Washington Ave.
Racine, WI 53403
Phone (262) 636−9164
FAX (262) 636−9298

Sheboygan, City of
City Hall, 3rd Fl.
828 Center Ave.
Sheboygan, WI 53081
Phone (920) 459−3478
FAX (920) 459−3967

Removed by Register November 2004 No. 587. For current adm. code see: http://docs.legis.wisconsin.gov/code/admin_code.



**A−82.20 (4)** PLANS AND SPECIFICATIONS. The following is a list of water quality management agencies and the areas they serve.

**Note:** This listing is compiled by the department of natural resources and is subject to periodic update.

| AGENCY | AREAS SERVED |
|---|---|
| East Central Wisconsin Regional Planning Agency<br>132 Main Street<br>Menasha, WI 54952<br>(920) 751−4770 | Counties of Calumet, Fond du Lac, Green Lake, Marquette, Menominee, Outagamie, Shawano, Waupaca, Waushara, Winnebago |
| Dane County Regional Planning Commission<br>217 South Hamilton, Room 403<br>Madison, WI 53703<br>(608) 266−4137 | County of Dane |
| Brown County Planning Commission<br>100 N. Jefferson Street, Room 608<br>Green Bay, WI 54301<br>(920) 448−3400 | County of Brown |
| Southeastern Wisconsin Regional Planning Commission<br>916 North East Avenue<br>P. O. Box 1607<br>Waukesha, WI 53187−1607<br>(262) 547−6721 | Counties of Kenosha, Milwaukee, Ozaukee, Racine, Walworth, Waukesha, Washington |
| West Central Wisconsin Regional Planning Commission<br>800 Wisconsin Street<br>Eau Claire, WI 54703−3606<br>(715) 836−2918 | "Chippewa−Eau Claire Metropolitan Planning Area;":<br>Cities of Altoona, Chippewa Falls, Eau Claire, *River Falls (est. completion July 2000),*<br>Towns of Brunswick, Hallie, Lafayette, Seymour, Tilden, Union, Washington |
| St. Croix County Planning Department<br>1101 Carmichael Road<br>Hudson, WI 54016<br>(715) 386−4673 | "Hudson Urban Area;" City of Hudson<br>Towns of Hudson, St. Joseph, Troy,<br>Village of North Hudson, Western 1/2 of Town of Warren |
| Bay−Lake Regional Planning Commission<br>211 N. Broadway, Suite 211<br>Green Bay, WI 54303−2757<br>(920) 448−2820 | Cities of Marinette, Kohler, Sheboygan, Sheboygan Falls, Sturgeon Bay, Manitowoc & *Two Rivers (est. completion Jan. 2000)*<br>Towns of Peshtigo, Porterfield, Mosel, Wilson, Lima, Herman, Sheboygan, Sheboygan Falls, Herman<br>Villages of Howards Grove, Kohler |
| Rock County Planning Agency<br>51 South Main Street<br>Janesville, WI<br>(608) 757−5310 | Cities of Janesville and Beloit<br>Towns of Beloit, Harmony, Rock, Janesville, LaPrairie, Turtle<br>Village of Clinton |
| LaCrosse/Onalaska<br>Office of City Engineer<br>400 LaCrosse Street<br>LaCrosse, WI 54601<br>(608) 789−7505 | Cities of LaCrosse, Onalaska<br>Towns of Shelby, Campbell |
| Portage County Planning Department<br>1516 Church Street<br>Stevens Point, WI 54481<br>(715) 346−1334 | "Stevens Point Urban Area;" City of Stevens Point<br>Villages of Plover, Park Ridge, Whiting<br>Towns of Hull, Linwood, Plover |

Removed by Register November 2004 No. 587. For current adm. code see: http://docs.legis.wisconsin.gov/code/admin_code.



| | |
|---|---|
| Marathon County Planning Department<br>210 River Drive<br>Wausau, WI 54403−5449<br>(715) 261−6040 | "Wausau Urban Area;" Cities of Wausau, Schofield<br>Towns of Maine, Stettin, Texas, Wausau, Weston "Rib Mountain Metropolitan Sewerage District;" Towns of Kronenwetter, Rib Mountain, Rothschild<br>Village of Weston |
| Wood County Planning<br>400 Market Street<br>Wisconsin Rapids, WI 54495<br>(715) 421−8466 | "Southern Wood County;" Cities of Nekoosa, Wisconsin Rapids<br>Towns of Grand Rapids, Port Edwards, Rudolph, Saratoga, Seneca, Sigel<br>Villages of Biron, Port Edwards, Rudolph |
| Dunn County Land Conservation<br>390 Red Cedar Street<br>Menomonie, WI 54751<br>(715) 232−1496 | City of Menomonie (Sanitary Sewer Extensions only) |
| Oconto County/West Shore<br>Oconto County Office of Land Use and Zoning<br>310 Washington Street<br>Oconto, WI 54153−1621<br>(920) 834−6827 | City of Oconto<br>Towns of Abrams, Little River, Little Suamico, Pensaukee, Stiles, Oconto |
| North Central Wisconsin Regional Planning Commission<br>407 Grant Street<br>Wausau, WI 54403<br>(715) 261−6565 | *City of Marshfield (est. completion July 2000)*<br>City of Merrill |
| Sauk County Planning & Zoning<br>505 Broadway<br>Baraboo, WI 53913<br>(608) 355−3285 | *City of Baraboo (est. completion July 2000)* |
| City of Superior<br>Administrative Engineer<br>1407 Hammond Avenue<br>Superior, WI 54880<br>(715) 394−0691 | City of Superior |
| Utilities General Manager<br>Sturgeon Bay Utilities<br>P.O. Box 259<br>230 East Vine Street<br>Sturgeon Bay, WI 54235<br>(920) 746−2820 | City of Sturgeon Bay |

Removed by Register November 2004 No. 587. For current adm. code see: http://docs.legis.wisconsin.gov/code/admin_code.



**A−82.30 (4)** The following table lists the gallons per minute (GPM) which can be expected to readily flow through a given size trap where the receptor has a height (H) as indicated.

Also listed is a drainage fixture unit (dfu) load which a given size receptor trap may be expected to adequately receive.

**Note:** A minimum individual 4−inch diameter trap and drain for a commercial type dishwasher is recommended.

| Receptor Trap Size (in inches) | H (in inches) | GPM | Drainage Fixture Units (dfu) |
|---|---|---|---|
| 1−1/2 | 12 | 4 | 2 |
| 2 | 14 | 8 | 4 |
| 3 | 15 | 12 | 6 |
| 4 | 17 | 40 | 20 |
| 5 | 20 | 70 | 35 |
| 6 | 22 | 120 | 60 |
| 8 | 25 | 250 | 125 |

Removed by Register November 2004 No. 587. For current adm. code see: http://docs.legis.wisconsin.gov/code/admin_code.



**A−82.30 (4) (d)** Section NR 110.13 (2) (c) reads: "NR 110.13 (2) (c) *Slope.* 1. Conventional gravity sewers shall be laid with uniform slope between manholes. All sewers shall be designated and constructed to give average velocities of not less than 60 centimeters per second (2.0 feet per second) when flowing full. The minimum slopes in Table 1 shall be provided. Slopes less than 0.4% may be permitted for 20 centimeter (8 inch) sewers. In such cases, however, the slope may not be less than 0.3%. The department (DNR) will approve these sewers only when the owner demonstrates that physical circumstances warrant the lesser slope. Furthermore, approval will not be granted until the department (DNR) has received written assurance from the operating authority that the authority will provide the additional maintenance which may result from the sedimentation due to decreased velocities."

**NR 110 Table 1**

| Sewer Size (in inches) | Minimum Slope (ft./100 ft.) |
|---|---|
| 8 (20 cm) | 0.40 |
| 10 (25 cm) | 0.28 |
| 12 (30 cm) | 0.22 |
| 15 (38 cm) | 0.15 |
| 18 (46 cm) | 0.12 |
| 21 (53 cm) | 0.10 |
| 24 (61 cm) | 0.08 |

Removed by Register November 2004 No. 587. For current adm. code see: http://docs.legis.wisconsin.gov/code/admin_code.



**A–82.30 (6) (b)** OFFSETS IN VERTICAL DRAINS.

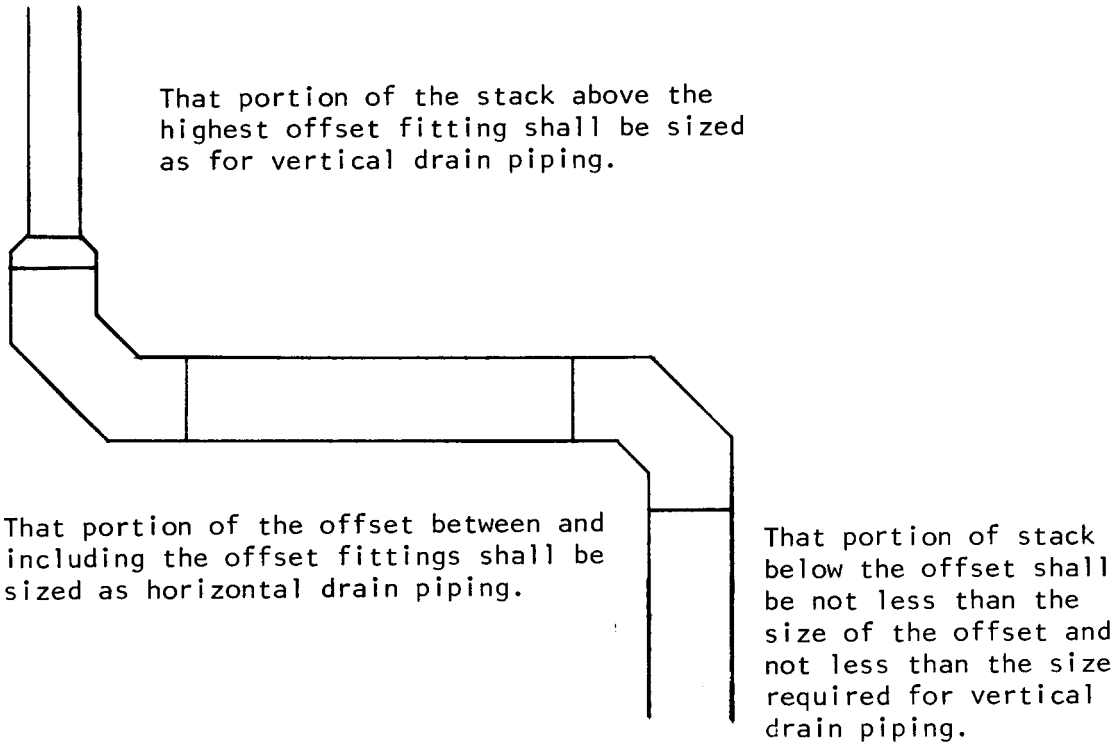


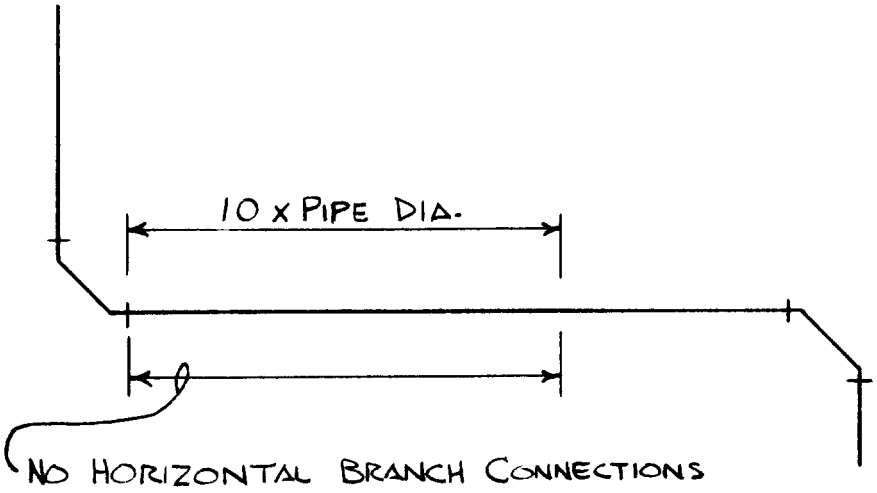

Removed by Register November 2004 No. 587. For current adm. code see: http://docs.legis.wisconsin.gov/code/admin_code.



**A–82.30 (7)** HORIZONTAL BRANCH DRAIN CONNECTION AT BASE OF A STACK.

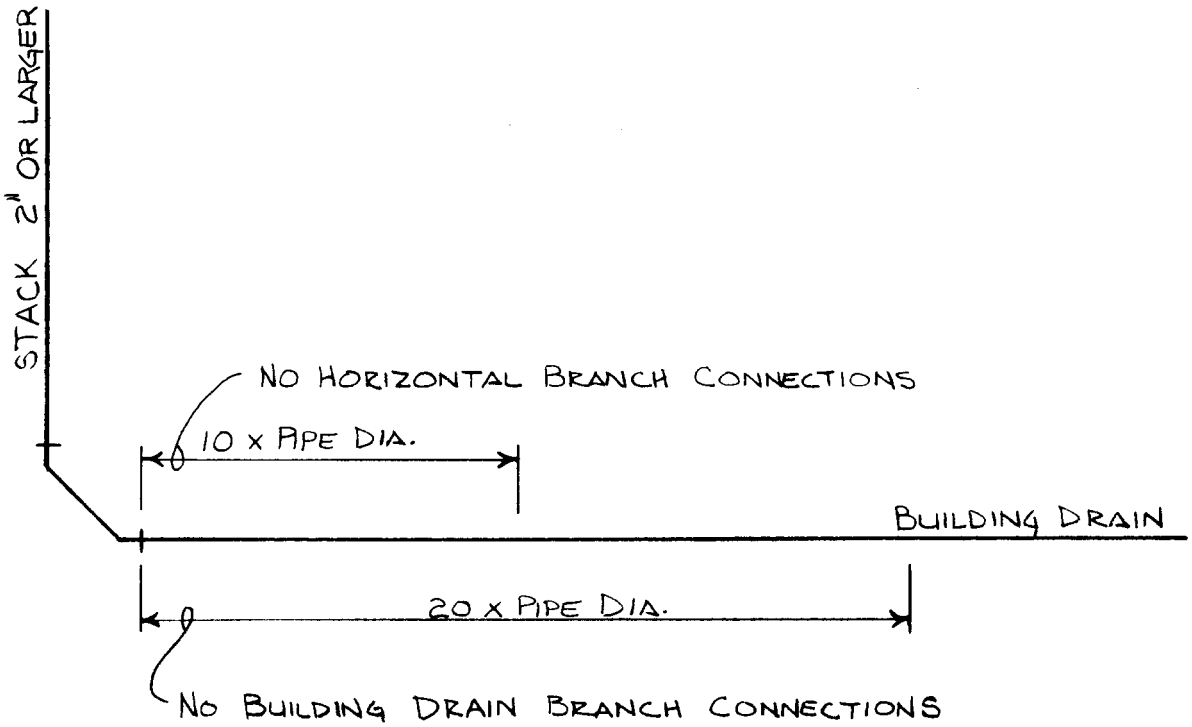


**A–82.30 (8)** MEASURING RADIUS OF A FITTING.

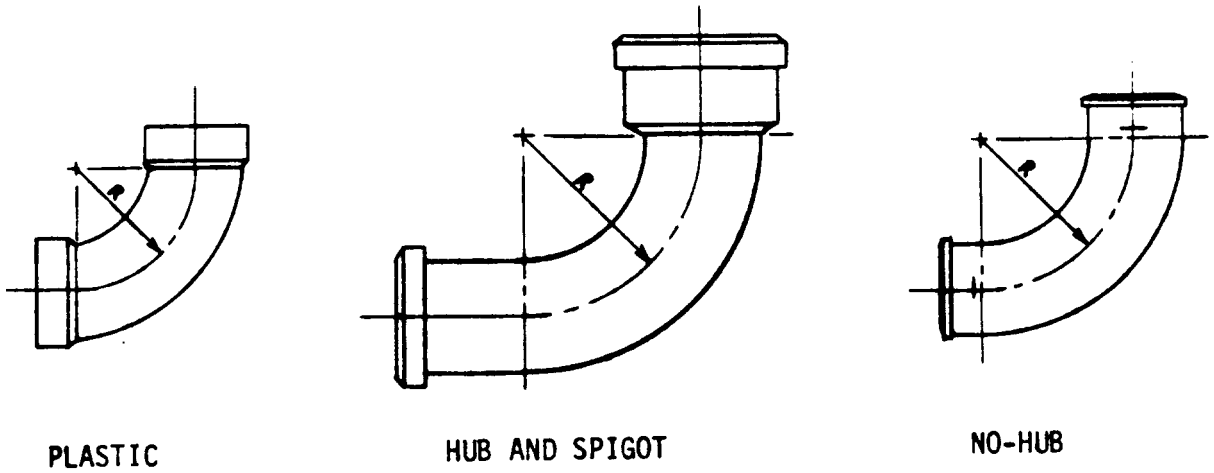

Removed by Register November 2004 No. 587. For current adm. code see: http://docs.legis.wisconsin.gov/code/admin_code.



**A–82.30 (9)** DRAIN FITTINGS AND CONNECTIONS.

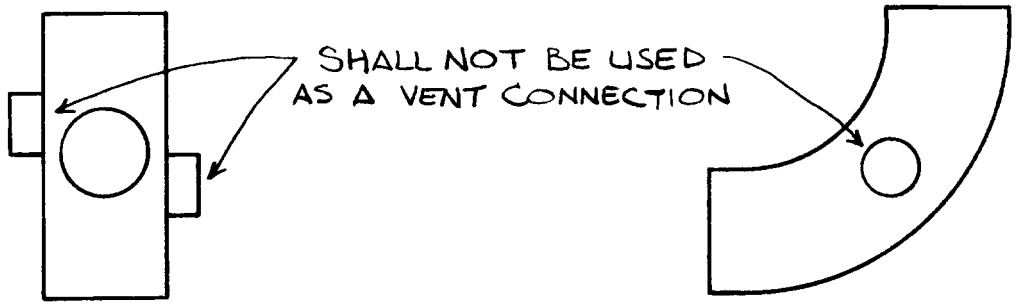


SIDE VIEW SIDE VIEW

SIDE INLETS

ALLOWED
(SIDE VIEW)

NOT ALLOWED
(TOP VIEW OR SIDE VIEW)

HEEL INLETS

Removed by Register November 2004 No. 587. For current adm. code see: http://docs.legis.wisconsin.gov/code/admin_code.



**A–82.30 (10) (a)** DETERMINING REQUIRED CAPACITY OF SANITARY PUMP.

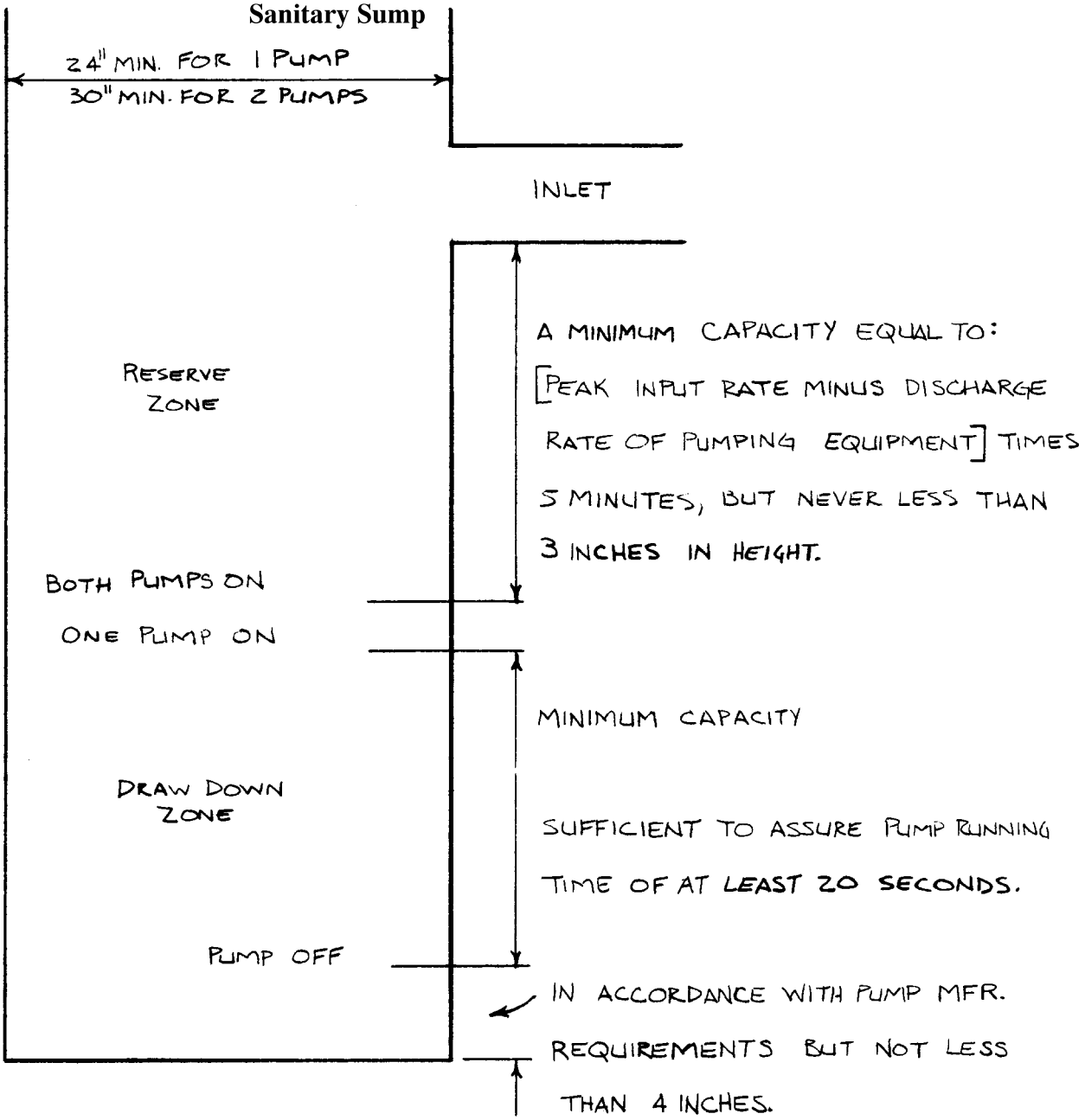

Removed by Register November 2004 No. 587. For current adm. code see: http://docs.legis.wisconsin.gov/code/admin_code.



**A−82.30 (10) (a)** SUMPS.

**Capacity of sumps**
**(in gallons)**

| Diameter of sump in inches | Volume in gal/ft | Diameter of sump in inches | Volume in gal/ft |
|---|---|---|---|
| 24 | 23.5 | 41 | 68.6 |
| 25 | 25.5 | 42 | 72.1 |
| 26 | 27.6 | 43 | 75.5 |
| 27 | 29.7 | 44 | 79.1 |
| 28 | 32.0 | 45 | 82.7 |
| 29 | 34.3 | 46 | 86.5 |
| 30 | 36.8 | 47 | 90.2 |
| 31 | 39.2 | 48 | 94.0 |
| 32 | 41.8 | 54 | 119.0 |
| 33 | 44.5 | 60 | 147.0 |
| 34 | 47.2 | 66 | 178.0 |
| 35 | 50.0 | 72 | 211.5 |
| 36 | 52.8 | 78 | 248.4 |
| 37 | 55.9 | 84 | 288.1 |
| 38 | 59.0 | 90 | 330.8 |
| 39 | 62.1 | 96 | 376.3 |
| 40 | 65.3 | 108 | 477.3 |

**A−82.30 (10) (b) 3.** VELOCITY AND FLOW RELATIONSHIP MAINTAINING 2 FEET PER SECOND.

**Schedule 40 PVC**
**VELOCITY AND FLOW RELATIONSHIP**
**MAINTAINING 2 FEET PER SECOND**

| Nominal Inside Diameter (in inches) | Actual Inside Diameter (in inches) | GPM creating 2 ft. per second |
|---|---|---|
| $1^1/_4$ | 1.38 | 9 |
| 1 ½ | 1.61 | 13 |
| 2 | 2.067 | 21 |
| 3 | 3.068 | 46 |
| 4 | 4.026 | 79 |

Removed by Register November 2004 No. 587. For current adm. code see: http://docs.legis.wisconsin.gov/code/admin_code.



**A−82.30 (11) (b)** BUILDING DRAINS SERVING ANY BUILDING.

Removed by Register November 2004 No. 587. For current adm. code see: http://docs.legis.wisconsin.gov/code/admin_code.



**A−82.30 (11) (c)** BUILDING SEWER INSULATION. Sketch provides an illustration of an acceptable building sewer insulation for Zone C.

Removed by Register November 2004 No. 587. For current adm. code see: http://docs.legis.wisconsin.gov/code/admin_code.



**A−82.30 (11) (d)** SETBACKS FOR VARIOUS CONTAMINANT SOURCES. Setbacks for various contaminant sources as specified in s. NR 812.08 (4) (a) to (e). Section NR 812.08 (4) (a) to (e) reads:

"**NR 812.08 (4)** RELATION TO CONTAMINATION SOURCES. Minimum separating distances between any new potable or nonpotable well, reservoir or spring and existing sources of contamination; or between new sources of contamination and existing potable or nonpotable wells, reservoirs or springs shall be maintained as described in this subsection. The minimum separating distances of this subsection do not apply to dewatering wells approved under s. NR 812.09 (4) (a). Greater separation distances may be required for wells requiring plan approval under s. NR 812.09. Separation distance requirements to possible sources of contamination will not be waived because of property lines. Minimum separating distances are listed in Table A and are as follows:

(a) Eight feet between a well or reservoir and a:

1. Buried gravity flow sanitary or storm building drain having pipe conforming to ch. Comm 84;
2. Buried gravity flow sanitary or storm building sewer having pipe conforming to ch. Comm 84;
3. Watertight clear water waste sump;
4. Buried clear water waste drain having pipe conforming to ch. Comm 84;
5. Buried gravity flow foundation drain;
6. Rainwater downspout outlet;
7. Cistern;
8. Buried building foundation drain connected to a clear water waste drain or other subsoil drain;
9. Noncomplying pit, subsurface pumproom, alcove, or reservoir;
10. Nonpotable well;
11. Fertilizer or pesticide storage tank with a capacity of less than 1,500 gallons, but only when the well is nonpotable;

    **Note:** For potable wells see par. (d) 1.
12. Plastic silage storage and transfer tube;
13. Yard hydrant;
14. Swimming pool, measured to the nearest edge of the water; or
15. Dog or other small pet house, animal shelter or kennel housing not more than 3 adult pets on a residential lot.

(b) Twenty–five feet between a well or reservoir and a:

1. Buried grease interceptor or trap;
2. Septic tank;
3. Holding tank;
4. Buried building drain or building sewer having pipe not conforming to ch. Comm 84, wastewater sump, or non–watertight clear water waste sumps,
5. Buried pressurized sanitary building sewer having pipe conforming to ch. Comm 84;
6. Buried gravity manure sewer;
7. Lake, river, stream, ditch or stormwater detention pond or basin measured to the regional high water elevation in the case of a lake or stormwater detention pond, to the edge of the floodway in the case of a river or stream or to the edge in the case of a ditch or stormwater detention basin;
9. Liquid–tight barn gutter;
10. Animal barn pen with concrete floor;
11. Buried pressurized sewer pipe conveying manure provided that the pipe meets ASTM specification D–2241, with standard dimension ratio of 21 or less or pressure pipe meeting the requirements of s. NR 110.13 (6) (f) or 811.62.
12. Buried fuel oil tanks serving single family residences, including any associated buried piping;
13. Discharge to ground from a water treatment device;
14. Vertical shaft installed below grade used for intake of air for a heating or air conditioning system; or
15. Buried sanitary or storm collector sewer serving 4 or fewer living units or having a diameter of 6 inches or less.

Removed by Register November 2004 No. 587. For current adm. code see: http://docs.legis.wisconsin.gov/code/admin_code.



(c) Fifty feet between a well or reservoir and a:

1. Soil absorption unit receiving less than 8,000 gallons/day, existing, abandoned or alternate, but not including a school soil absorption unit;

   **Note:** For school soil absorption units see par. (e); for soil absorption units receiving more than 8,000 gallons/day see par. (f) 3.

2. Privy;
3. Pet waste pit disposal unit;
4. Animal shelter;
5. Animal yard;
6. Silo;
7. Buried sewer used to convey manure having pipe conforming to ch. Comm 84 that does not meet the specifications in par. (b);
8. Liquid tight manure hopper or reception tank;
9. Filter strip;
10. Buried sanitary or storm collector sewer serving more than 4 living units or larger than 6 inches in diameter except that wells may be located or sewers installed such that a well is less than 50 feet, but at least 25 feet, from gravity collector sewers smaller than 16 inches in diameter or from force main collector sewers 4 inches or smaller in diameter provided that within a 50–foot radius of the well the installed sewer pipe meets the allowable leakage requirements of AWWA C600 and the requirements for water main equivalent type pipe as follows:

a. For sewers >4” diameter, but <16” diameter: PVC pipe >4” diameter, but <12” diameter shall meet AWWA C900 with elastomeric joints having a standard dimension ratio of 18 or less; PVC pipe >12” diameter, but <16” diameter shall meet AWWA C905 with elastomeric joints having a standard dimension ratio of 18 or less; Ductile iron pipe shall meet AWWA C115 or AWWA C151 having a thickness class 50 or more.

b. For sewers <3” diameter, the pipe shall be any rigid pipe in the ch. Comm 84 “Table for Pipe and Tubing for Water Services and Private Water Mains,” including approved ABS, brass, cast iron, CPVC, copper (not including type M copper) ductile iron, galvanized steel, polybutylene (PB), polyethylene (PE), PVC, or stainless steel pipe.

11. An influent sewer to a wastewater treatment plant;
12. The nearest existing or future grave site in cemeteries;
13. Wastewater treatment plant effluent pipe;
14. Buried pressurized sewer having pipe not conforming to ch. Comm 84; or
15. Manure loading area.

    **Note:** The minimum separating distance between a well or reservoir and a lift station is based on the presence of a sewer force main at the lift station.

(d) One hundred feet between a well or reservoir and a:

1. Bulk surface storage tank with a capacity greater than 1,500 gallons or any bulk buried storage tank regardless of capacity, including, for both surface or buried tanks, associated buried piping for any solid, semi–solid or liquid product but not including those regulated under par. (b) 12. This subdivision includes, but is not limited to petroleum product tanks, waste oil tanks and pesticide or fertilizer storage tanks not regulated under par. (a) 11. This subdivision does not include septic, holding and manure reception tanks, or liquified petroleum gas tanks as specified in ch. Comm 11.
2. Liquid–tight, fabricated manure or silage storage structure, in ground or at ground surface;
3. Wastewater treatment plant structure, conveyance or treatment unit; or
4. Dry fertilizer or pesticide storage building or area when more than 100 pounds of either or both materials are stored;
5. Well, drill hole or water system used for the underground placement of any waste, surface or subsurface water or any substance as defined in s. 160.01 (8), Stats.;
6. Stormwater infiltration basin;
7. Uncovered storage of silage on the ground surface;
8. Water–tight silage storage trench or pit; or
9. Lift station.

Removed by Register November 2004 No. 587. For current adm. code see: http://docs.legis.wisconsin.gov/code/admin_code.



(e) Two hundred feet between a school well and a soil absorption unit receiving less than 8,000 gallons per day, existing or abandoned.

(ee) One hundred fifty feet between a well or reservoir and a temporary manure stack.

(f) Two hundred fifty feet between a well or reservoir and a:

1. Manure stack.
2. Earthen or excavated manure storage structure.

   **Note:** Variances from the separating distances may be granted as specified in s. NR 812.43 for earthen storage and manure stacks constructed and maintained to the specifications of Soil Conservation Standards No. 425 or 312, respectively.
3. Soil absorption unit receiving 8,000 or more gallons per day, existing, abandoned, or alternate.
4. Sludge landspreading or drying area.
5. An earthen silage storage trench or pit.
6. Liquid waste disposal system including, but not limited to a treatment pond or lagoon, ridge and furrow system and spray irrigation system.

   **Note:** Variance from this separating distance may be granted for treatment ponds r lagoons constructed and maintained to an approval granted under ch. NR 213.
7. Salvage yard.
8. A salt or deicing material storage area including the building structure and the surrounding area where the material is transferred to vehicles. This subdivision does not include bagged deicing material.
9. Solid waste processing facility.
10. Solid waste transfer facility.
11. The boundaries of a landspreading facility for spreading of petroleum–contaminated soil regulated under ch. NR 718 while that facility is in operation.

(g) Twelve hundred feet between a well or reservoir and:

1. The nearest edge of an existing, proposed or abandoned landfill, measured to the nearest fill area of abandoned landfills, if known, otherwise measured to the nearest property line;
2. The nearest edge of a coal storage area in excess of 500 tons; or
3. A hazardous waste treatment facility regulated by the department.

Removed by Register November 2004 No. 587. For current adm. code see: http://docs.legis.wisconsin.gov/code/admin_code.



**A–82.30 (11) (f)** CONNECTION TO PRESSURIZED PUBLIC SEWER.

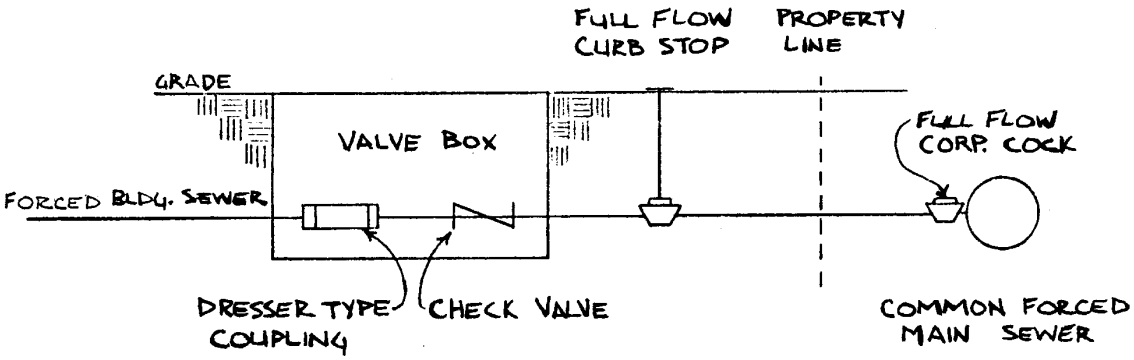

Removed by Register November 2004 No. 587. For current adm. code see: http://docs.legis.wisconsin.gov/code/admin_code.



**A−82.31 (4) (a)** WHERE A VENT STACK AND STACK VENT ARE REQUIRED.

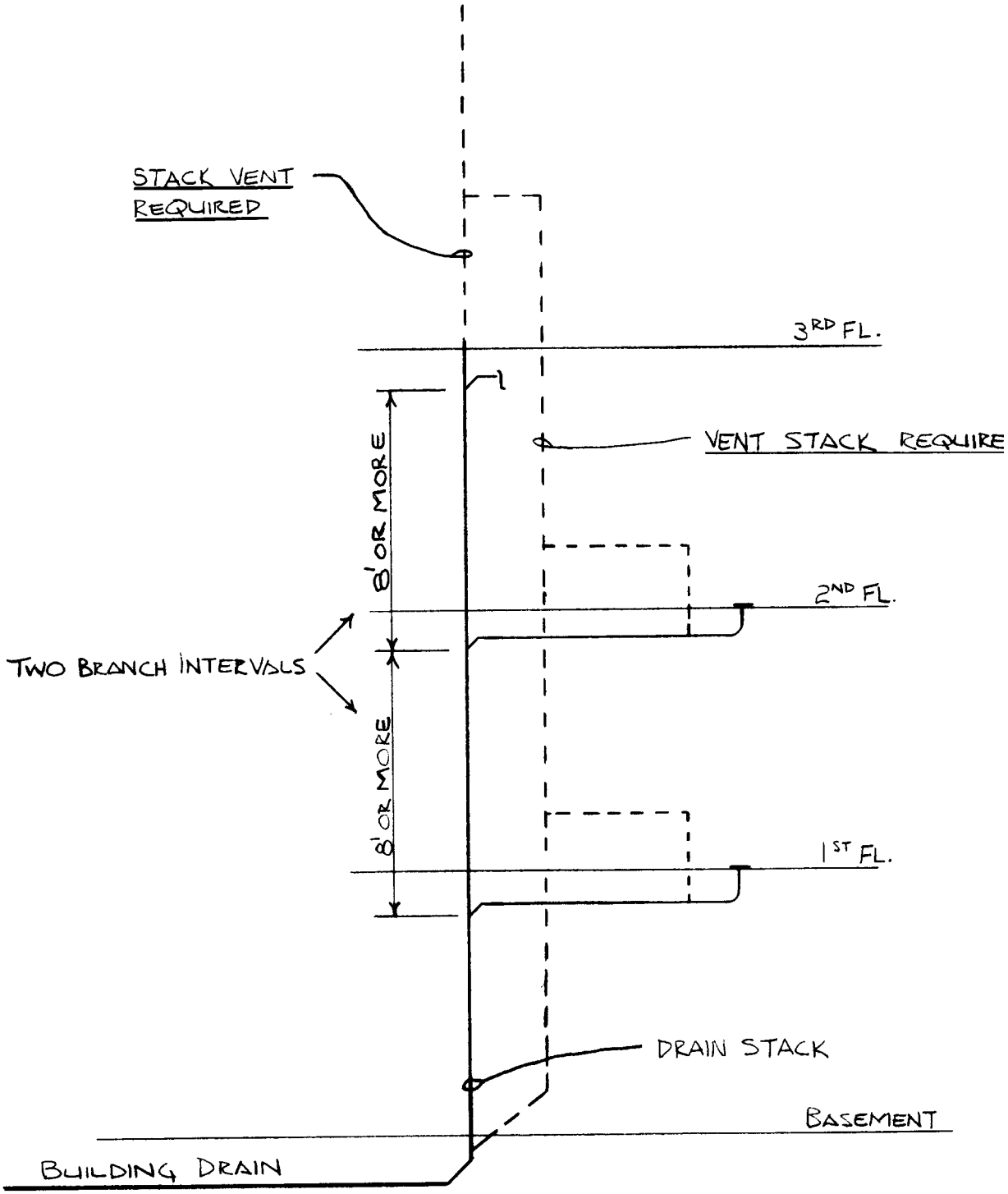

Removed by Register November 2004 No. 587. For current adm. code see: http://docs.legis.wisconsin.gov/code/admin_code.



**A–82.31 (4) (a)** WHERE A VENT STACK AND STACK VENT ARE NOT REQUIRED.

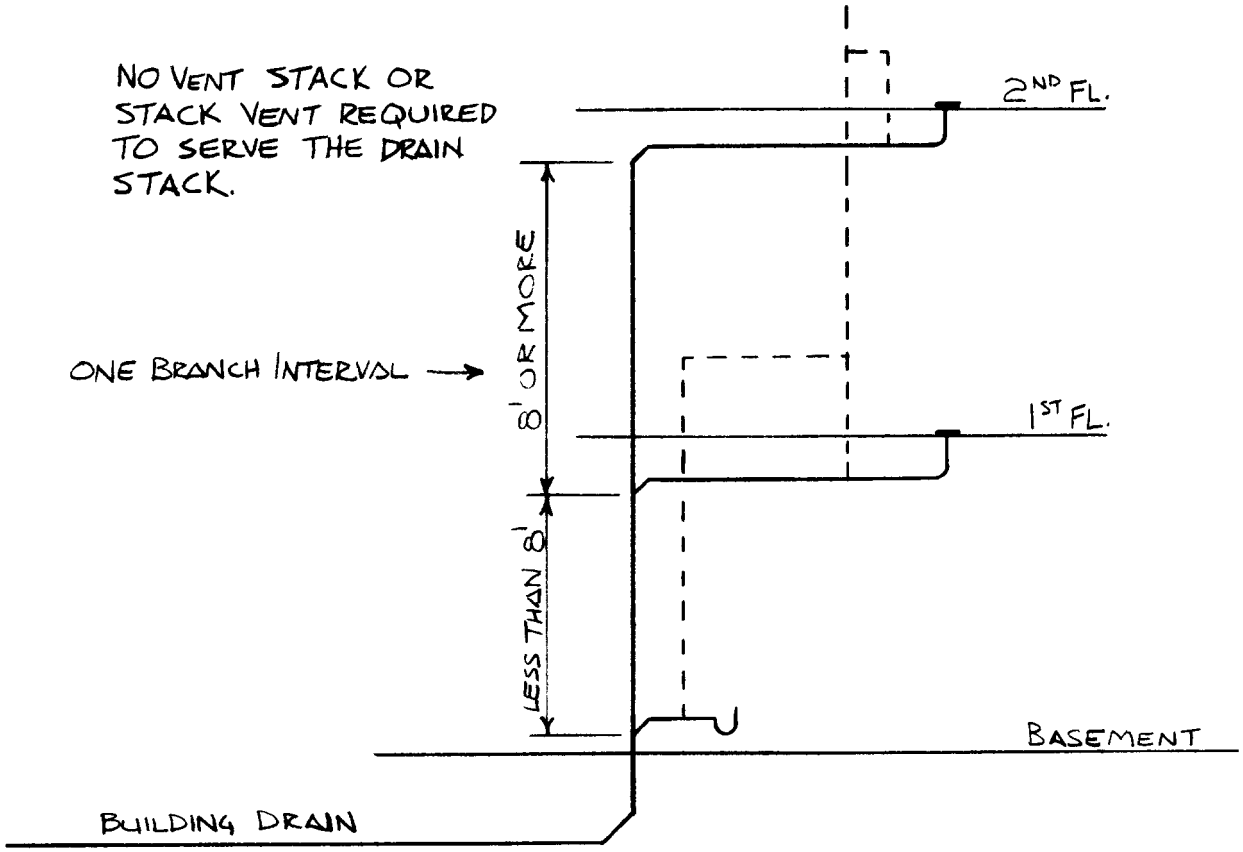

Removed by Register November 2004 No. 587. For current adm. code see: http://docs.legis.wisconsin.gov/code/admin_code.



**A–82.31 (4) (b)** INSTALLATION OF VENT STACK AND STACK VENT.

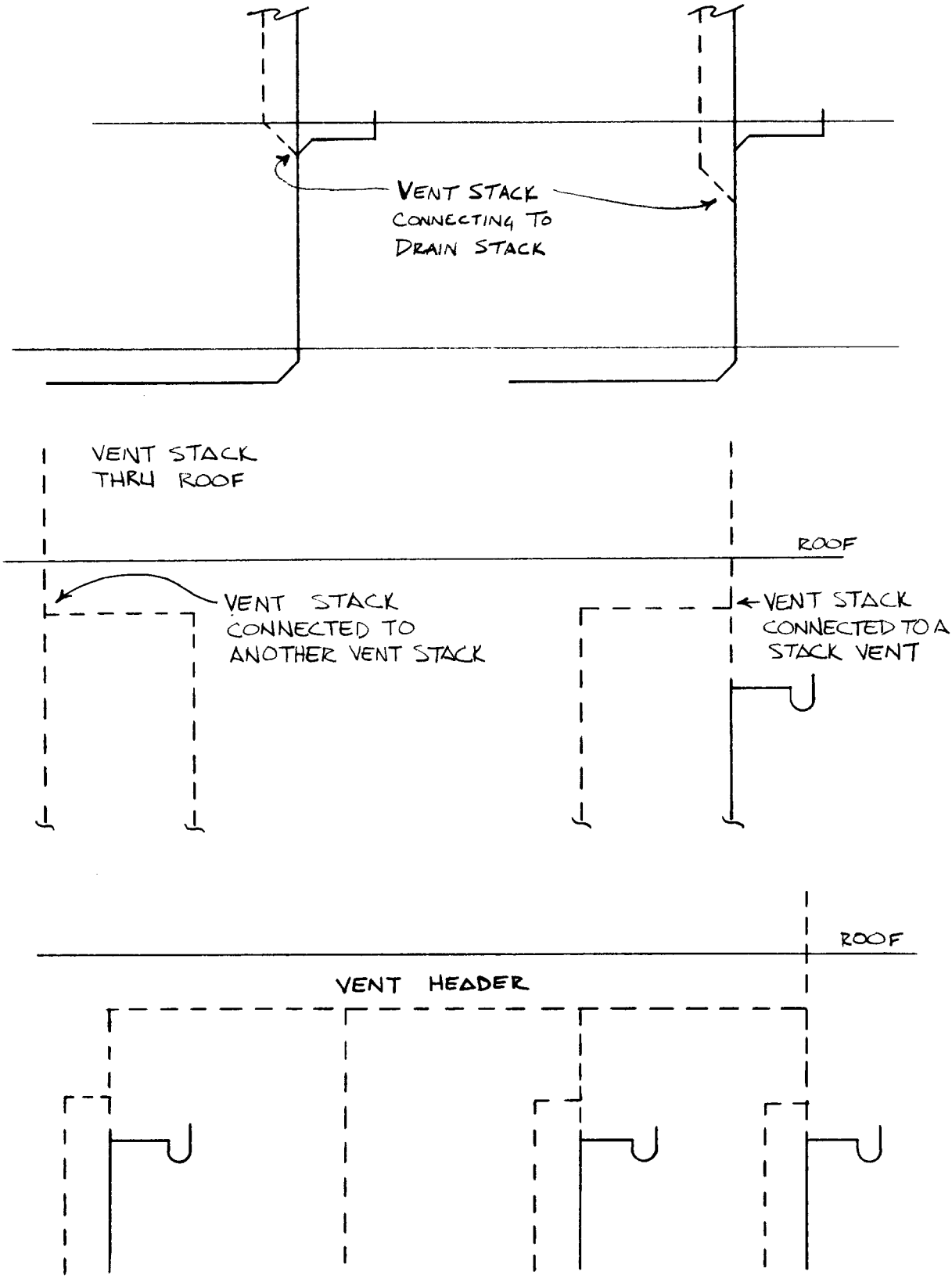

Removed by Register November 2004 No. 587. For current adm. code see: http://docs.legis.wisconsin.gov/code/admin_code.



**A–82.31 (5) (a)** Relief vent for offsets of 30 to 45 degrees.

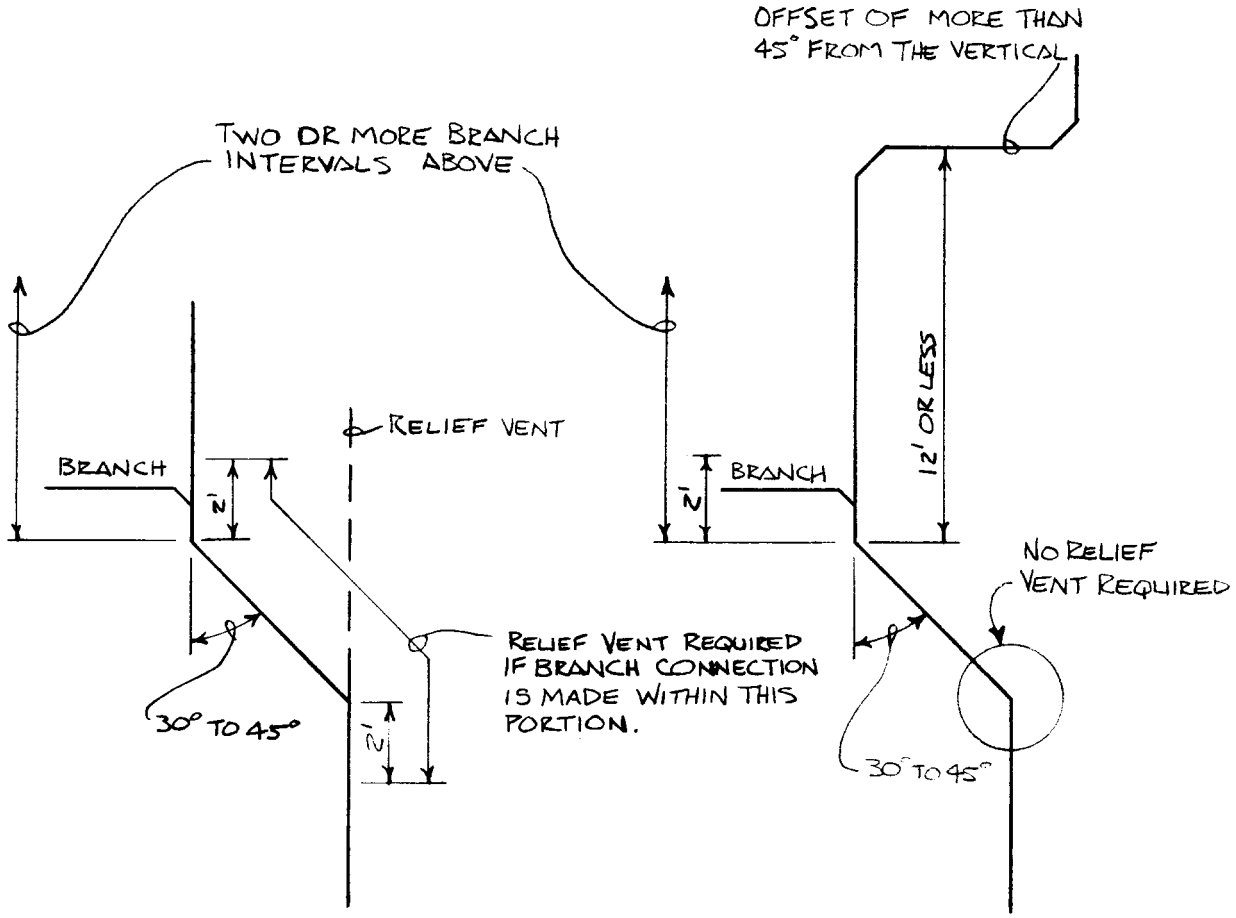

Removed by Register November 2004 No. 587. For current adm. code see: http://docs.legis.wisconsin.gov/code/admin_code.



**A–82.31 (5) (b)** RELIEF AND YOKE VENTS FOR OFFSETS OF MORE THAN 45 DEGREES.

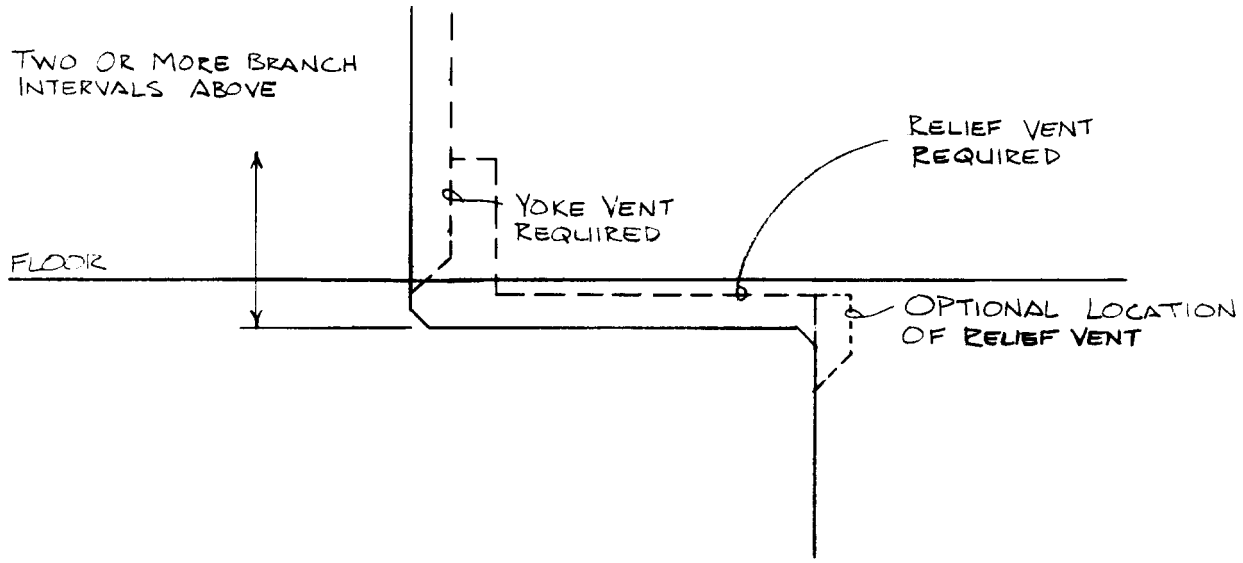


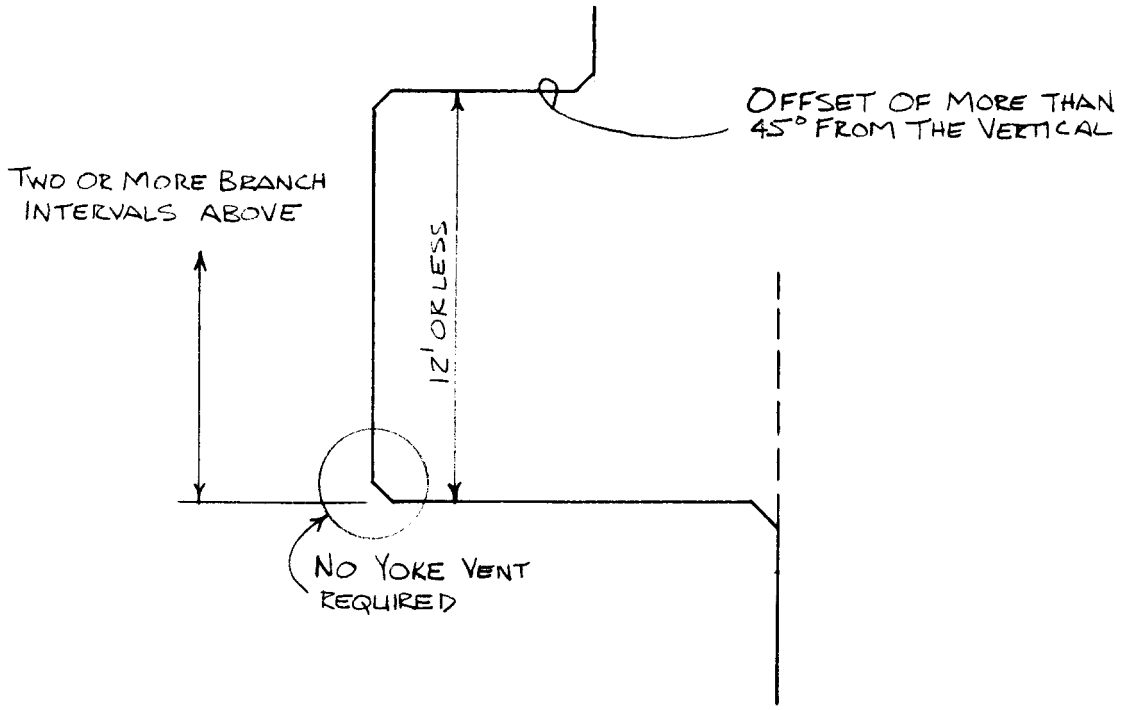

Removed by Register November 2004 No. 587. For current adm. code see: http://docs.legis.wisconsin.gov/code/admin_code.



**A–82.31 (7)** RELIEF VENTS FOR BUILDING DRAINS.

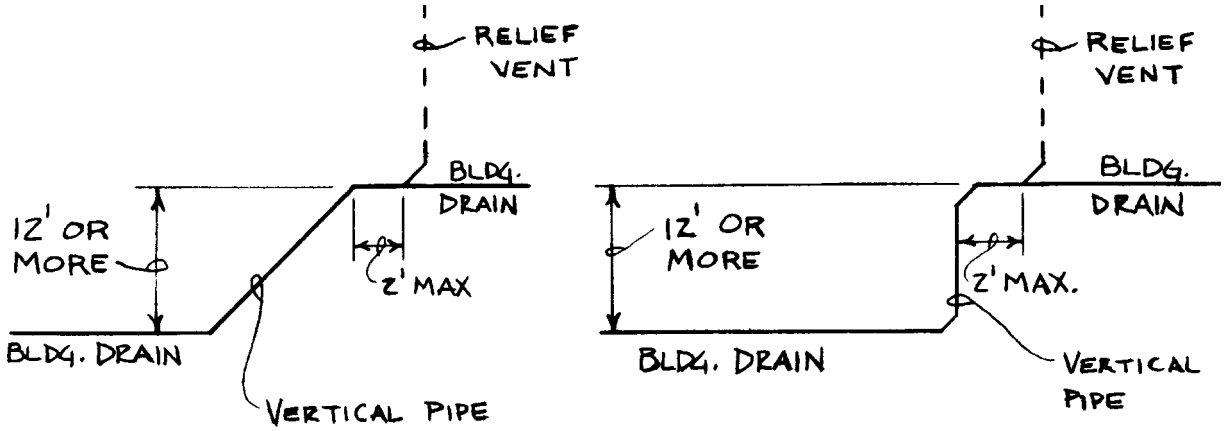


**A–82.31 (9)** FIXTURE VENTS.

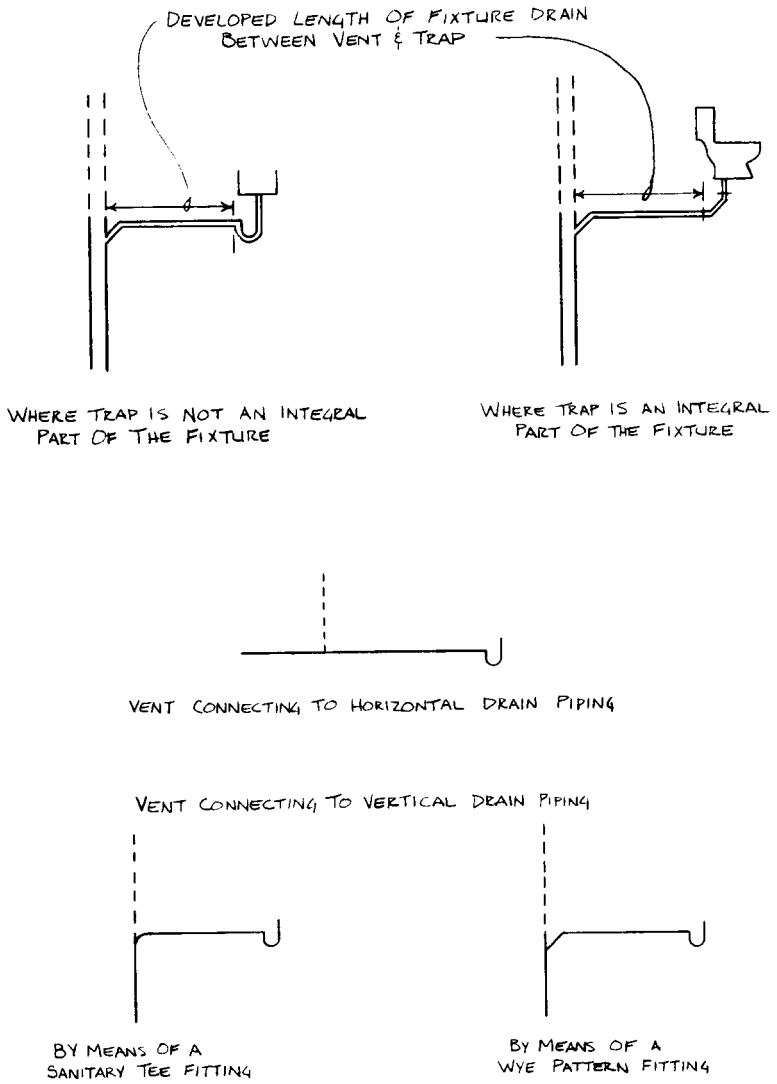

Removed by Register November 2004 No. 587. For current adm. code see: http://docs.legis.wisconsin.gov/code/admin_code.



**A–82.31 (10)** CIRCUIT VENTING.

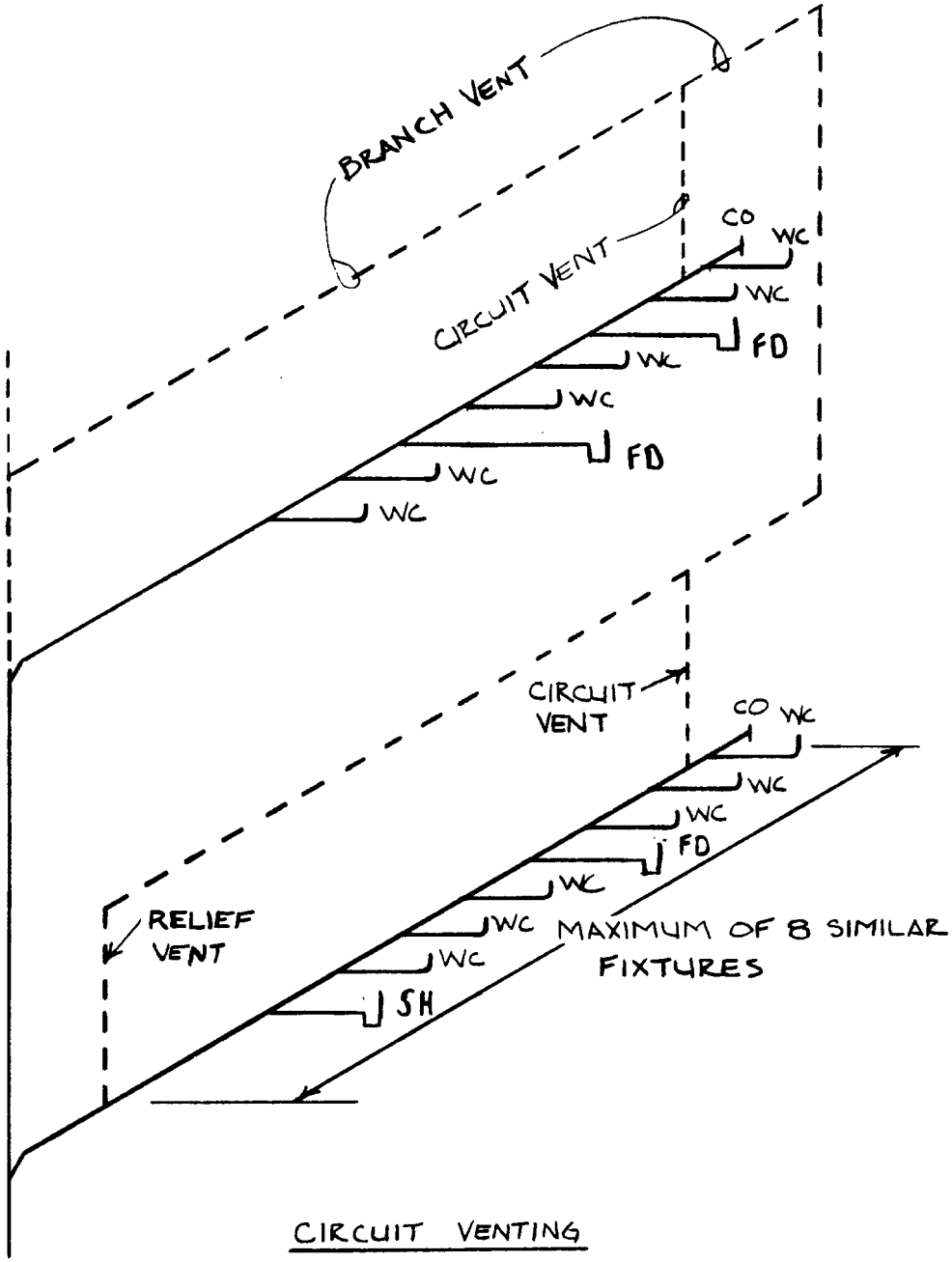

Removed by Register November 2004 No. 587. For current adm. code see: http://docs.legis.wisconsin.gov/code/admin_code.



**A–82.31 (10)** CIRCUIT VENTING.

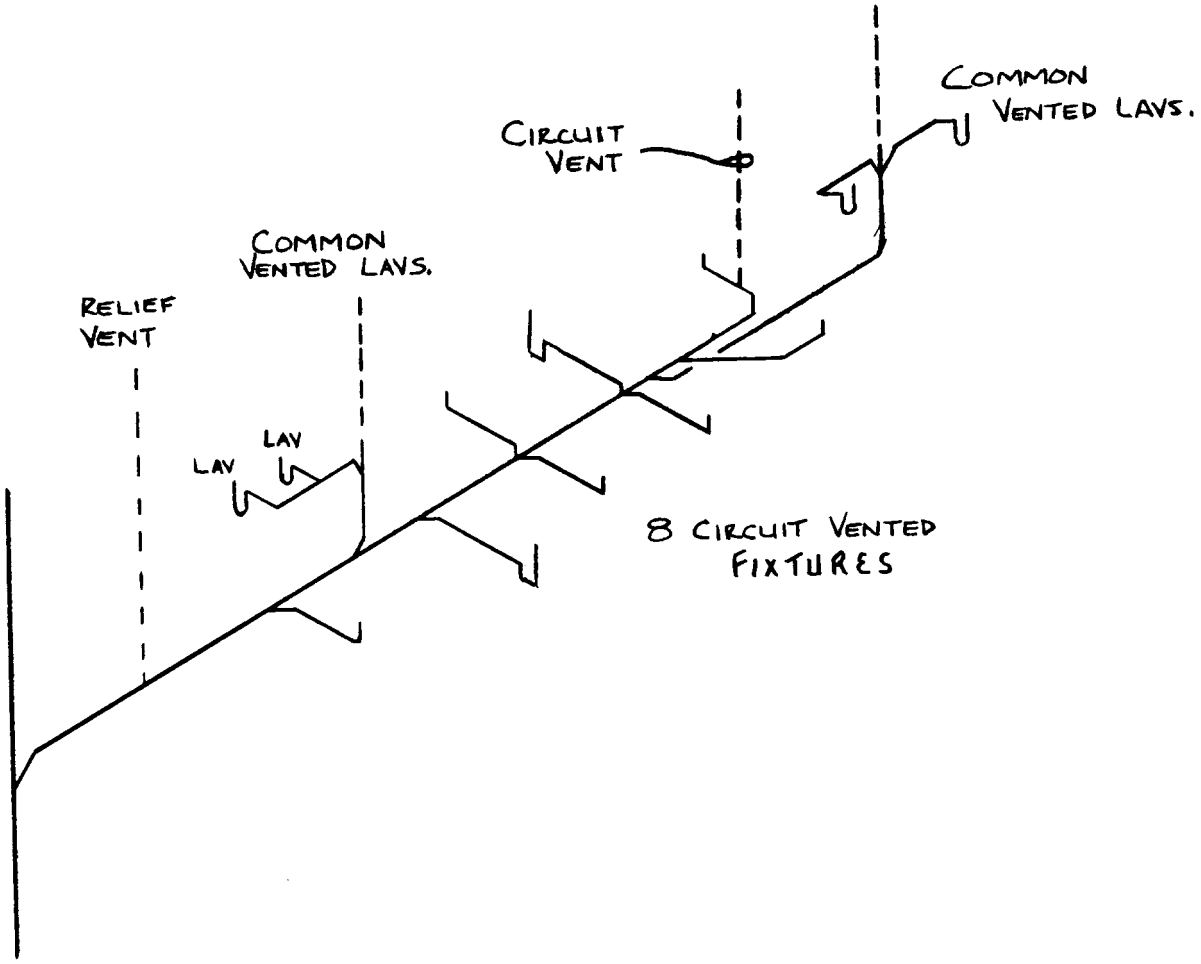

Removed by Register November 2004 No. 587. For current adm. code see: http://docs.legis.wisconsin.gov/code/admin_code.



**A–82.31 (10)** CIRCUIT VENTING.

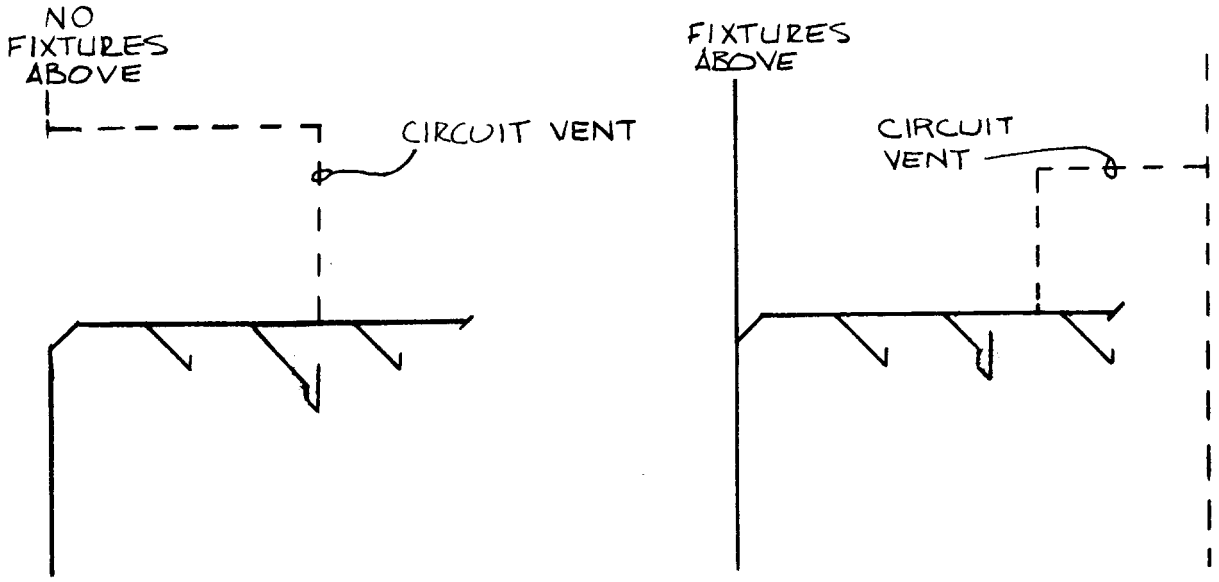


CIRCUIT VENTING
3 FIXTURES

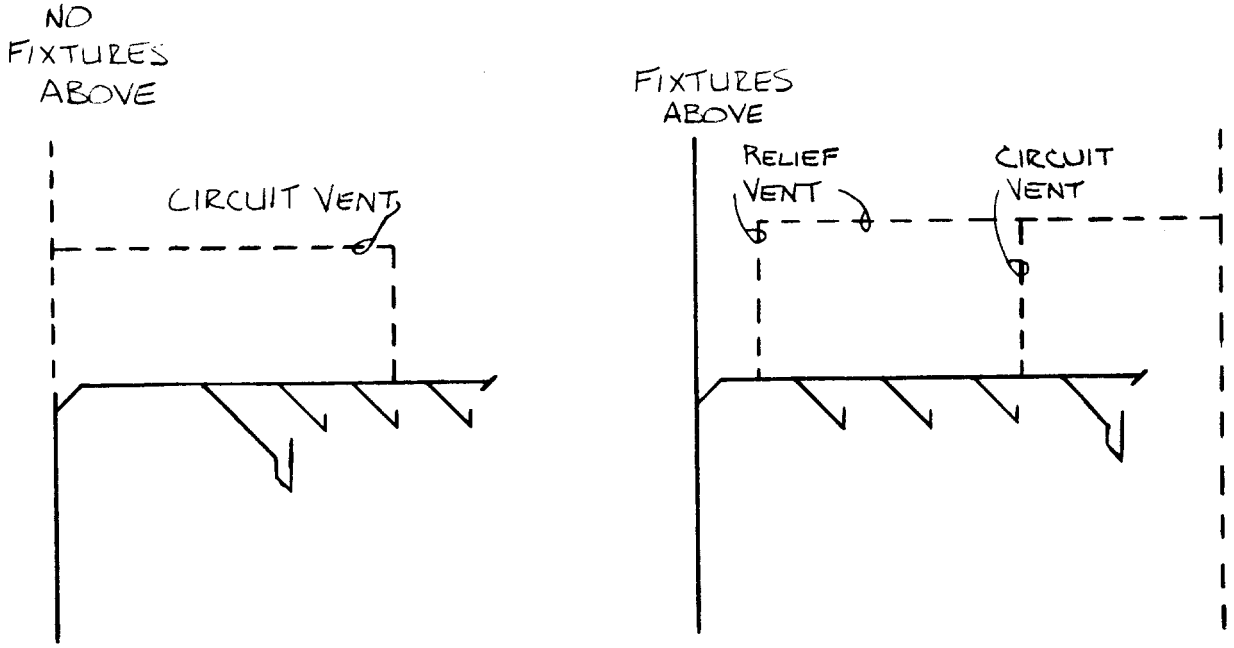


CIRCUIT VENTING 4 OR
MORE FIXTURES

Removed by Register November 2004 No. 587. For current adm. code see: http://docs.legis.wisconsin.gov/code/admin_code.



**A–82.31 (10)** CIRCUIT VENTING.

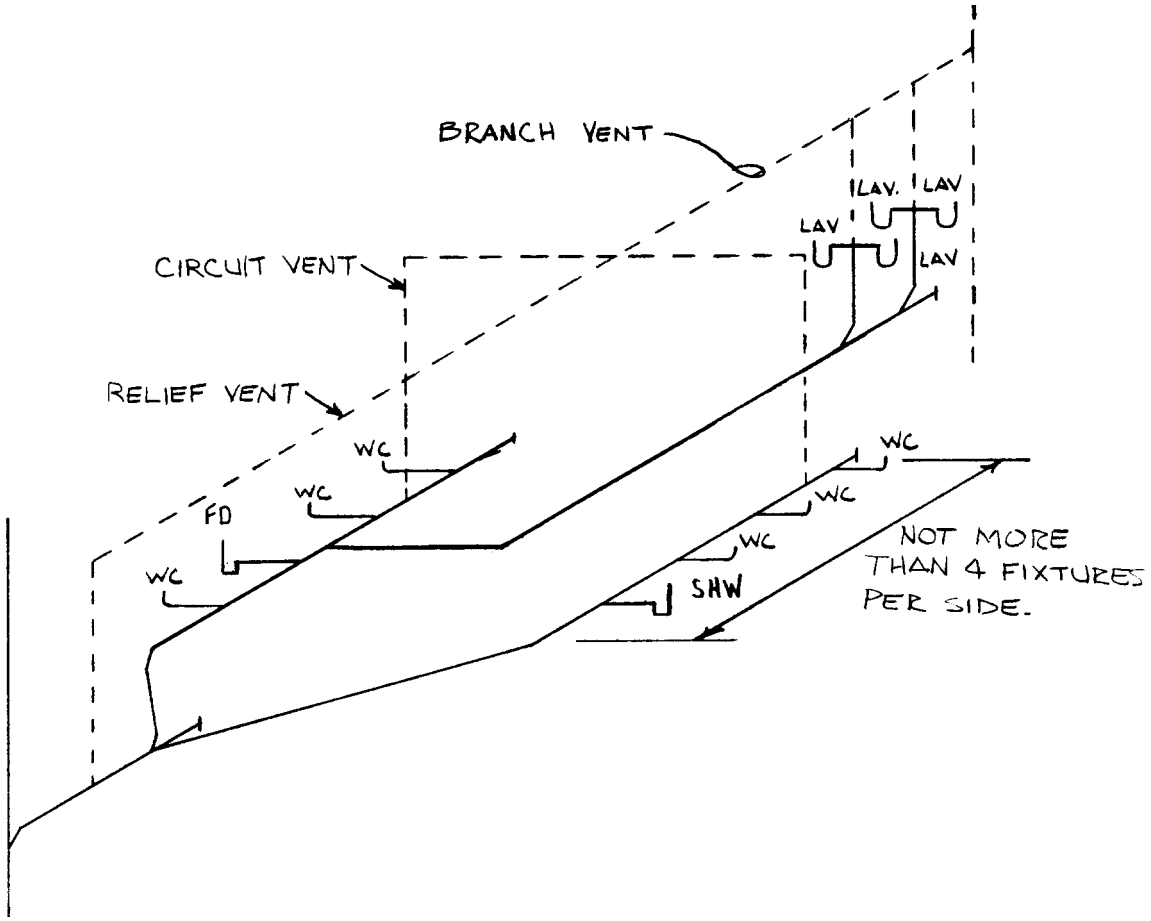


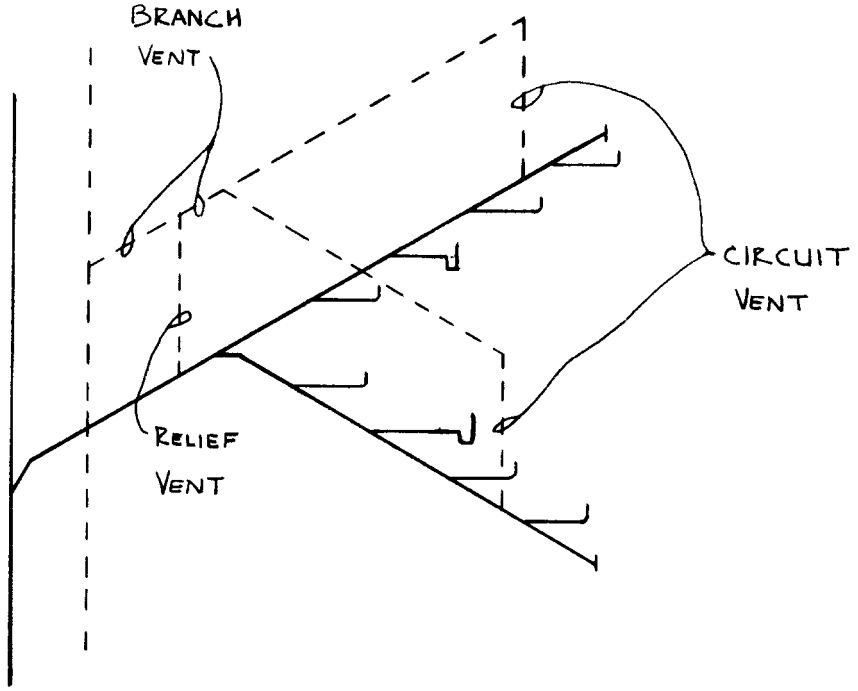

Removed by Register November 2004 No. 587. For current adm. code see: http://docs.legis.wisconsin.gov/code/admin_code.



**A–82.31 (11) (a)** COMMON VENTS, VERTICAL DRAINS.

COMMON VENT SERVING ANY TWO FIXTURES

**A–82.31 (11) (b)** COMMON VENTS, HORIZONTAL DRAINS.

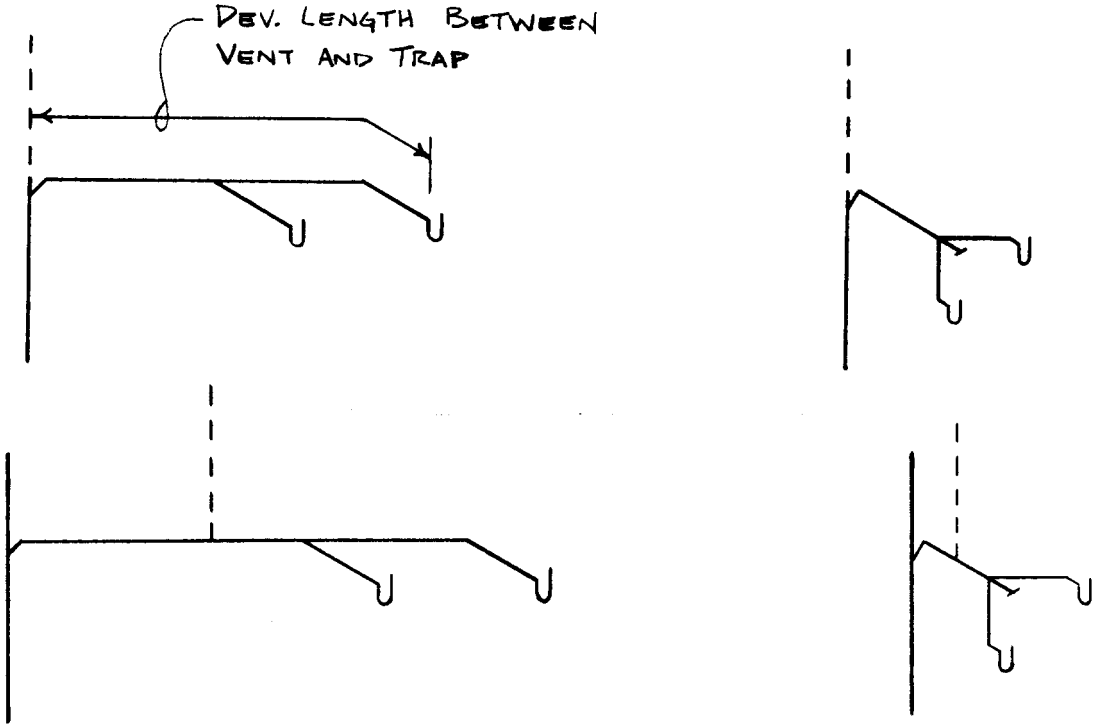

Removed by Register November 2004 No. 587. For current adm. code see: http://docs.legis.wisconsin.gov/code/admin_code.



**A–82.31 (12)** ISLAND FIXTURE VENTING.

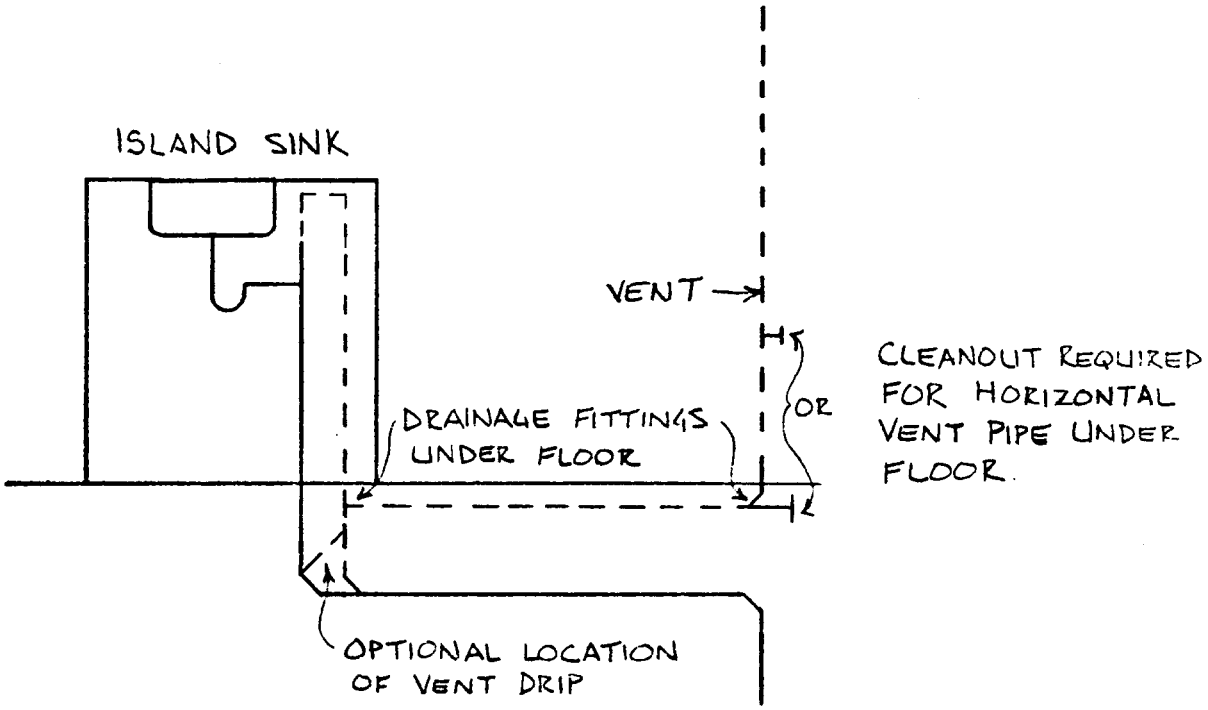


**A–82.31 (13) (a)** VERTICAL WET VENTS.

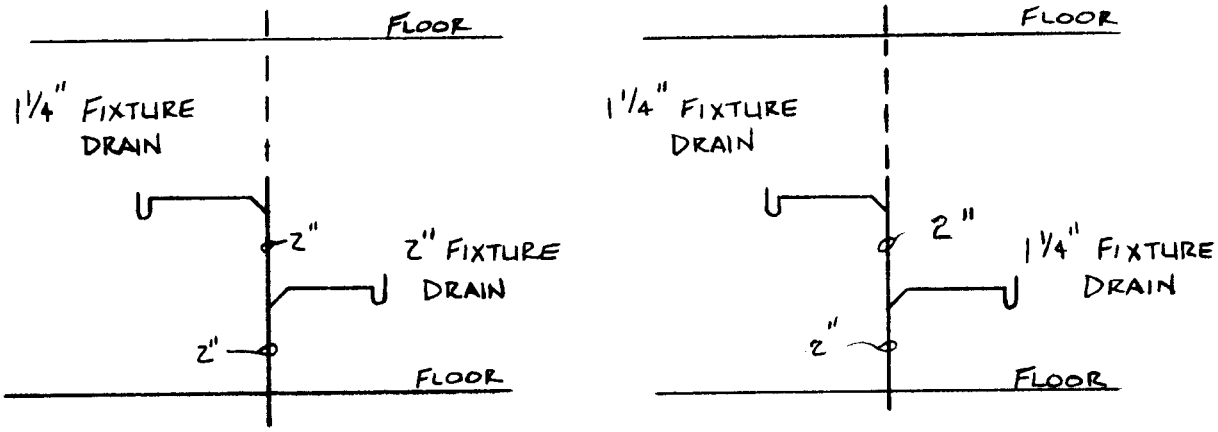

Removed by Register November 2004 No. 587. For current adm. code see: http://docs.legis.wisconsin.gov/code/admin_code.



**A–82.31 (13) (b)** HORIZONTAL WET VENTS.

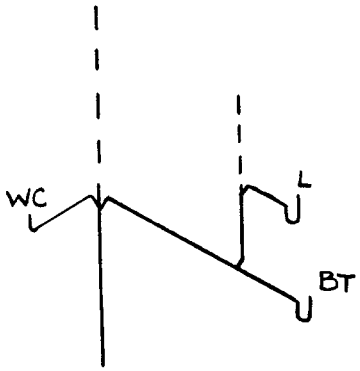


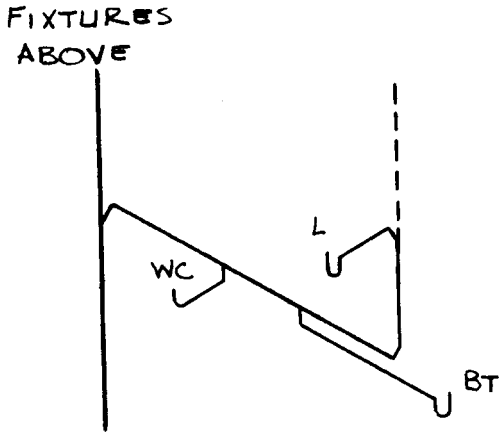


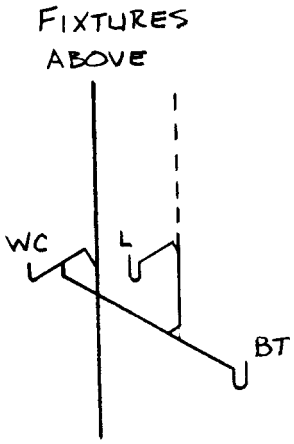


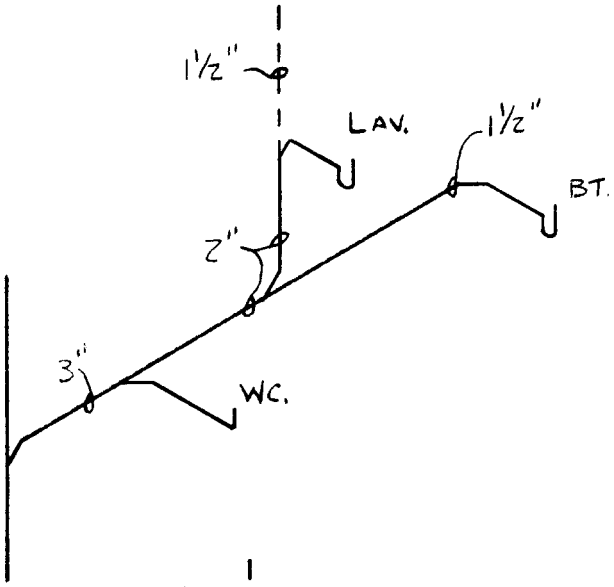


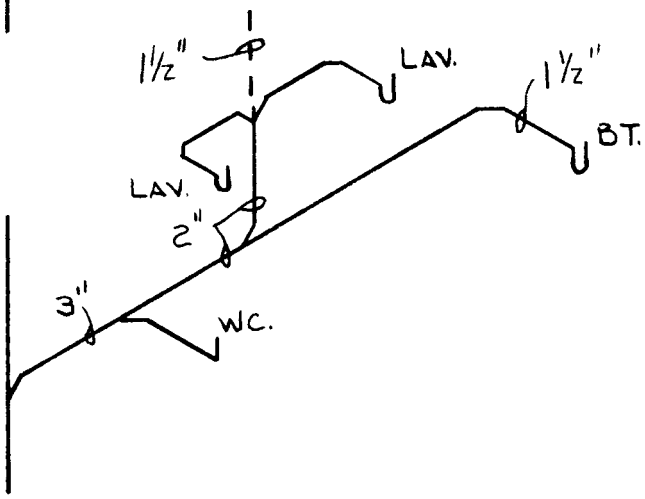

Removed by Register November 2004 No. 587. For current adm. code see: http://docs.legis.wisconsin.gov/code/admin_code.



**A−82.31 (13) (b)** HORIZONTAL WET VENTS.

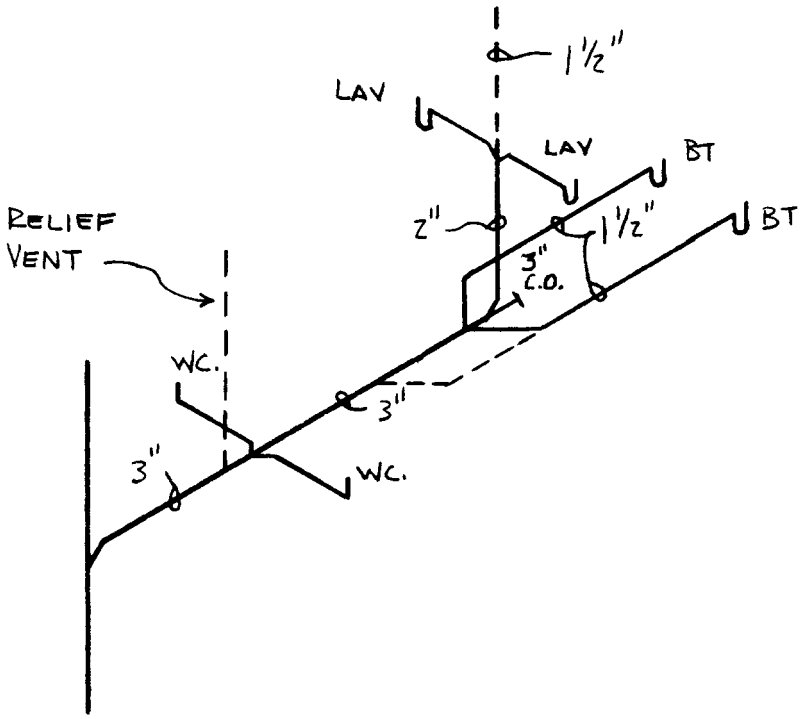


HORIZONTAL WET VENTS

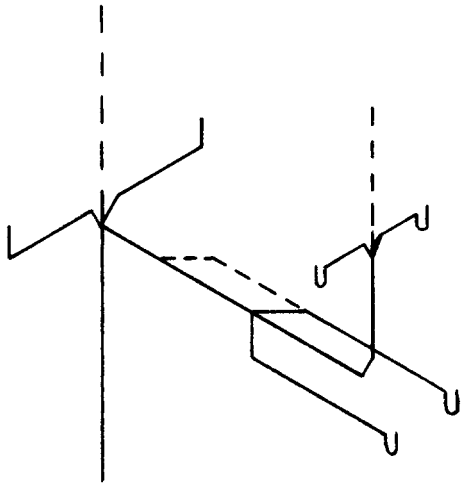

Removed by Register November 2004 No. 587. For current adm. code see: http://docs.legis.wisconsin.gov/code/admin_code.



**A–82.31 (13) (c)** WET VENTING – FLOOR OUTLET FIXTURES.

INDIVIDUAL VENT FOR FLOOR OUTLET FIXTURE SERVING AS A WET VENT

COMMON VENT FOR FLOOR OUTLET FIXTURES SERVING AS A WET VENT

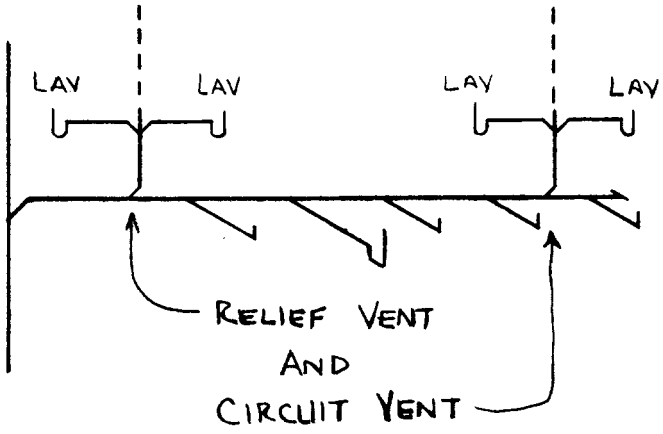


SERVING AS A WET VENT

Removed by Register November 2004 No. 587. For current adm. code see: http://docs.legis.wisconsin.gov/code/admin_code.



**A–82.31 (14) (a) and (b)** SIZING VENT STACKS AND STACK VENTS.

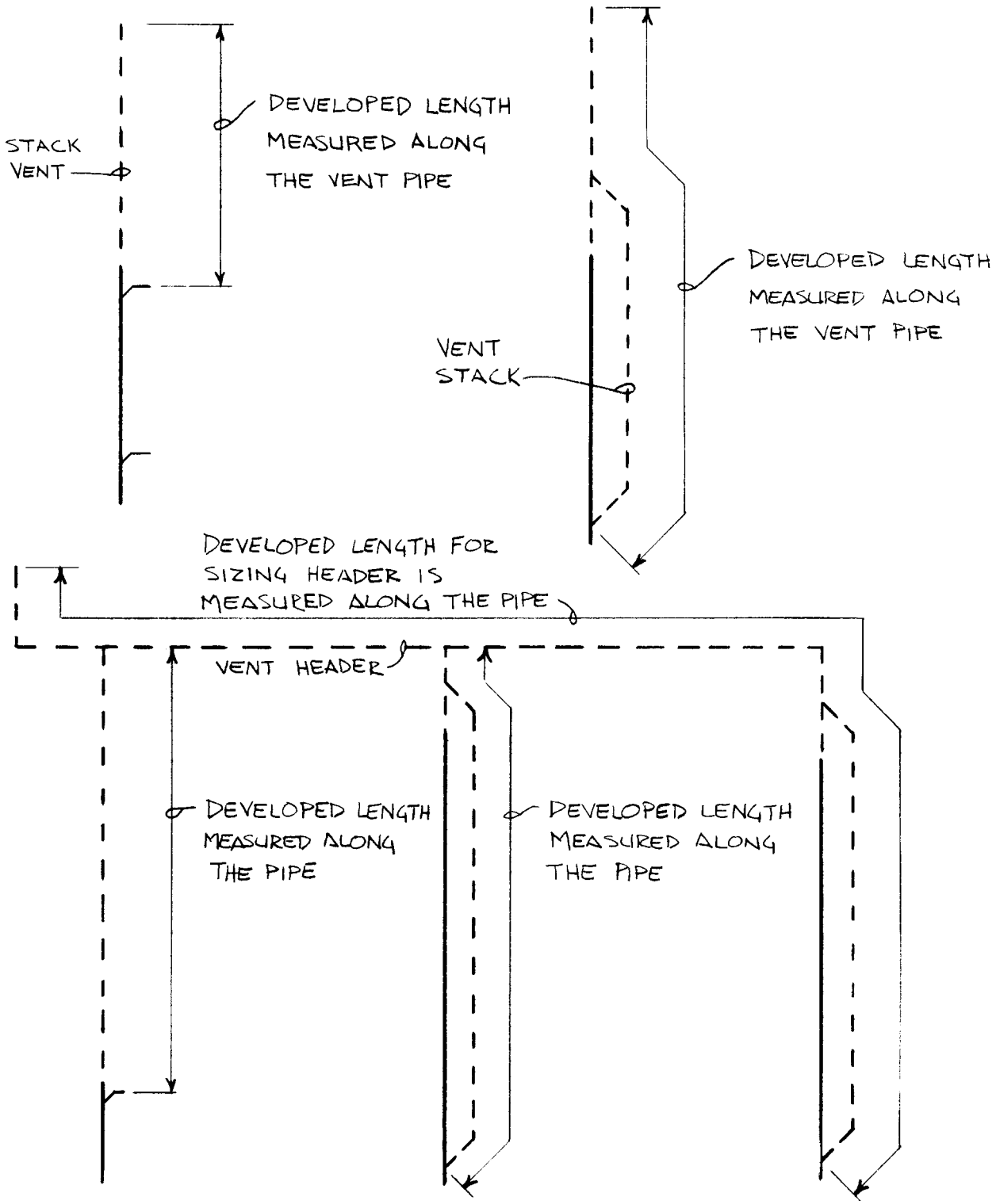

Removed by Register November 2004 No. 587. For current adm. code see: http://docs.legis.wisconsin.gov/code/admin_code.



**A–82.31 (14) (c)** SIZING BRANCH VENTS.

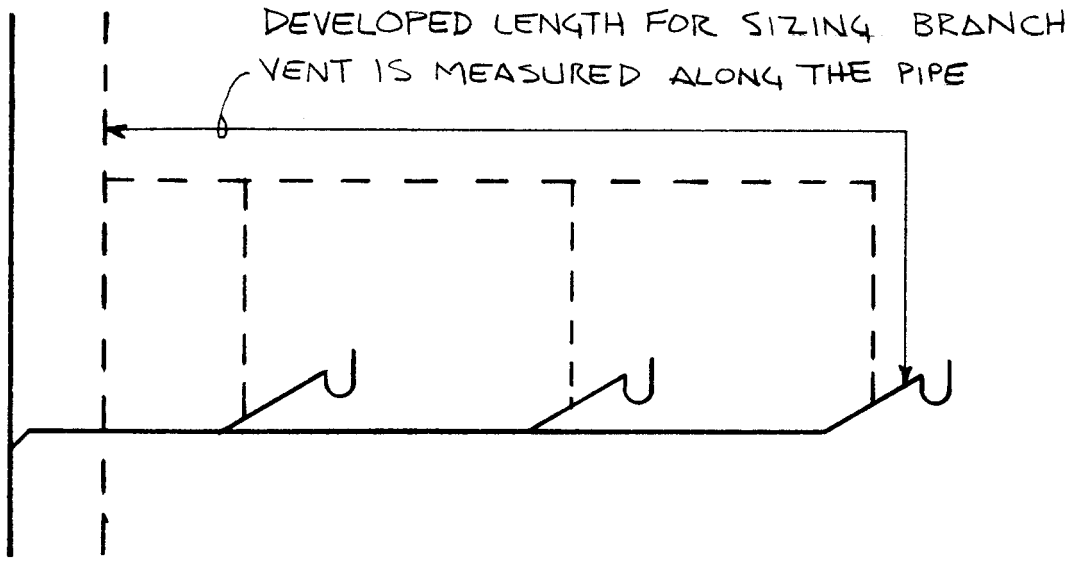


**A–82.31 (14) (d)** SIZING INDIVIDUAL VENTS.

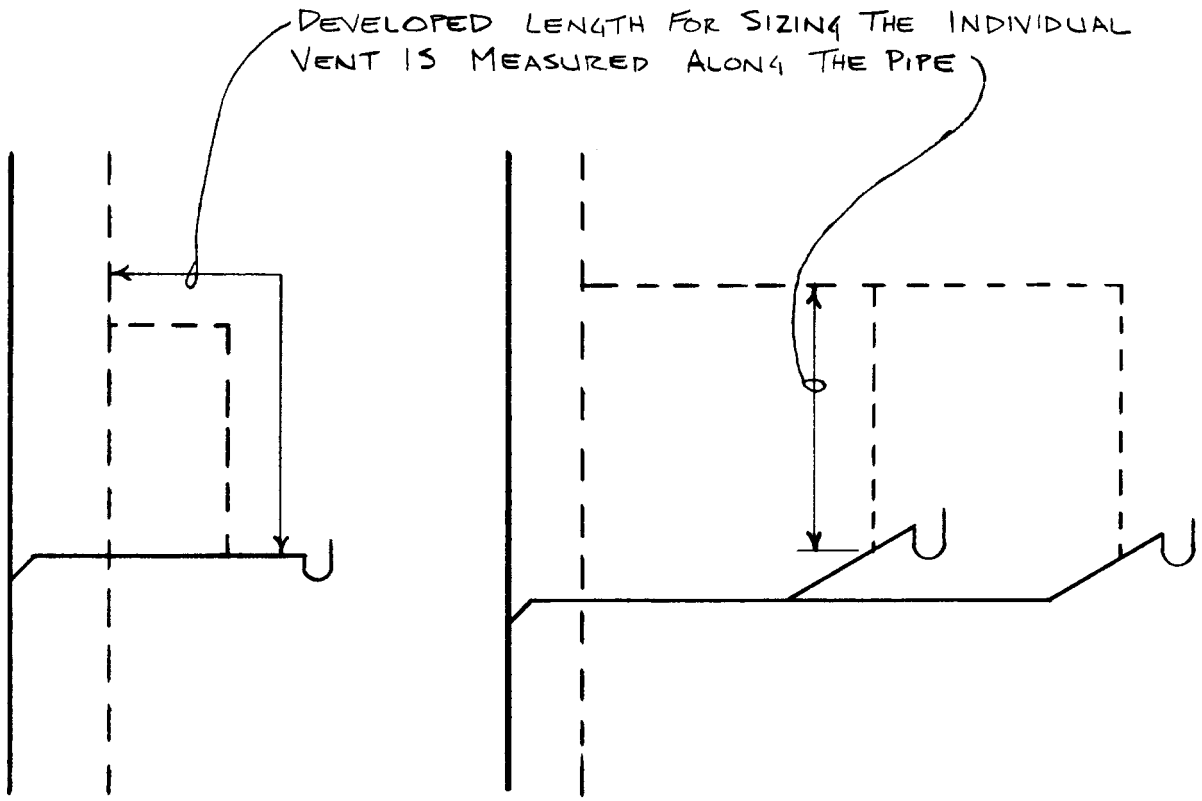

Removed by Register November 2004 No. 587. For current adm. code see: http://docs.legis.wisconsin.gov/code/admin_code.



**A–82.31 (14) (c)** SIZING BRANCH VENTS SERVING A WET VENT.

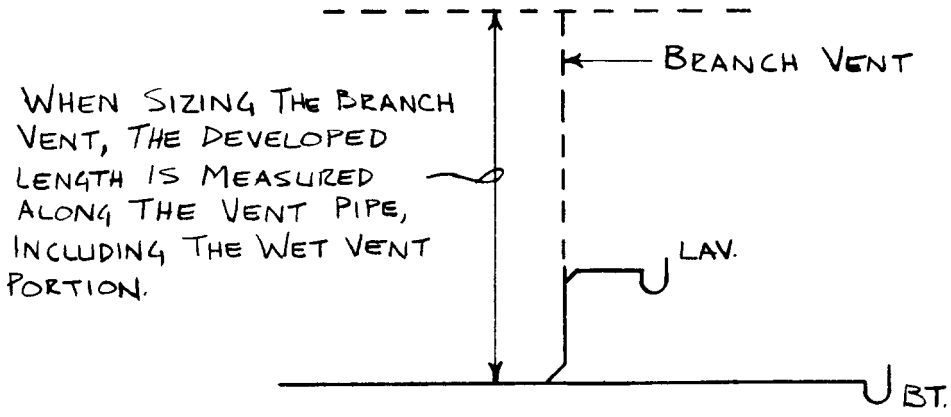


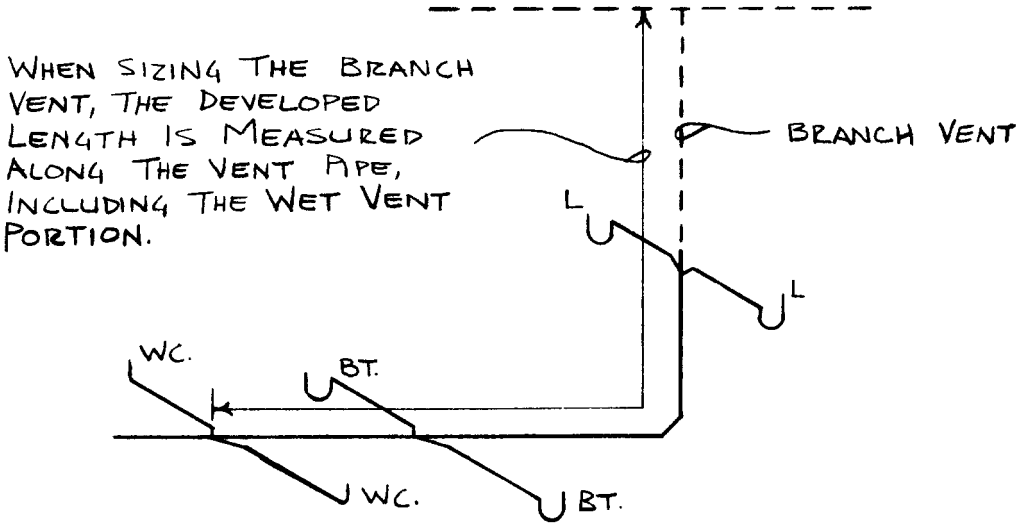

Removed by Register November 2004 No. 587. For current adm. code see: http://docs.legis.wisconsin.gov/code/admin_code.



**A–82.31 (15) (a)** VENT GRADES AND CONNECTIONS.

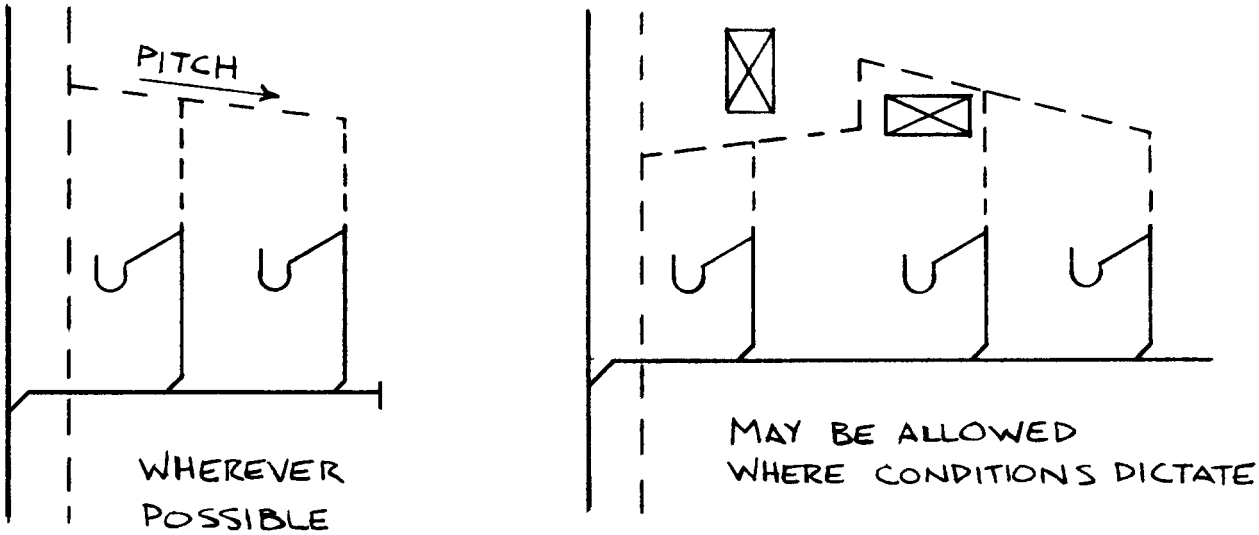


**A–82.31 (15) (b)** VENT GRADES AND CONNECTIONS.

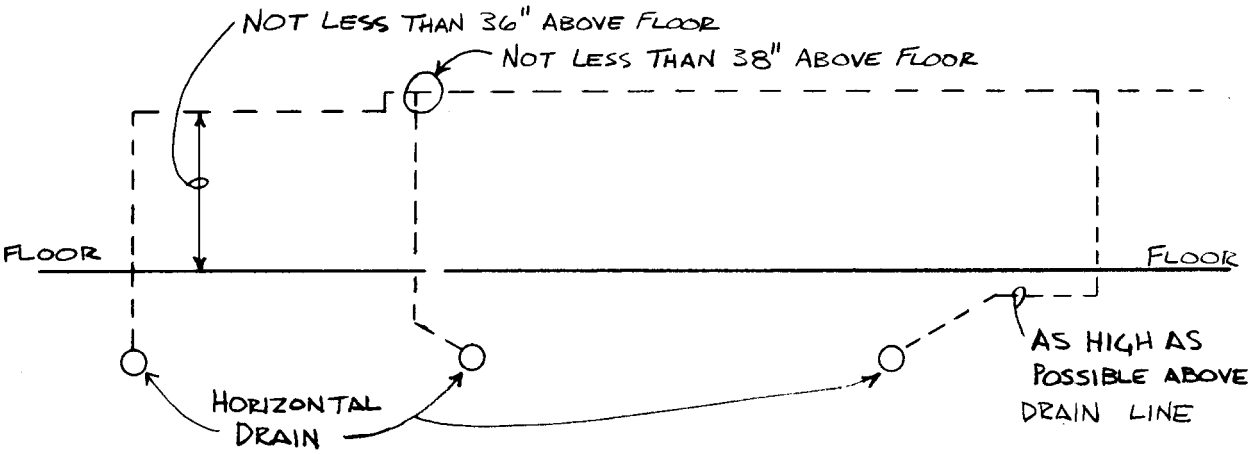

Removed by Register November 2004 No. 587. For current adm. code see: http://docs.legis.wisconsin.gov/code/admin_code.



**A–82.31 (16)** VENT TERMINALS.

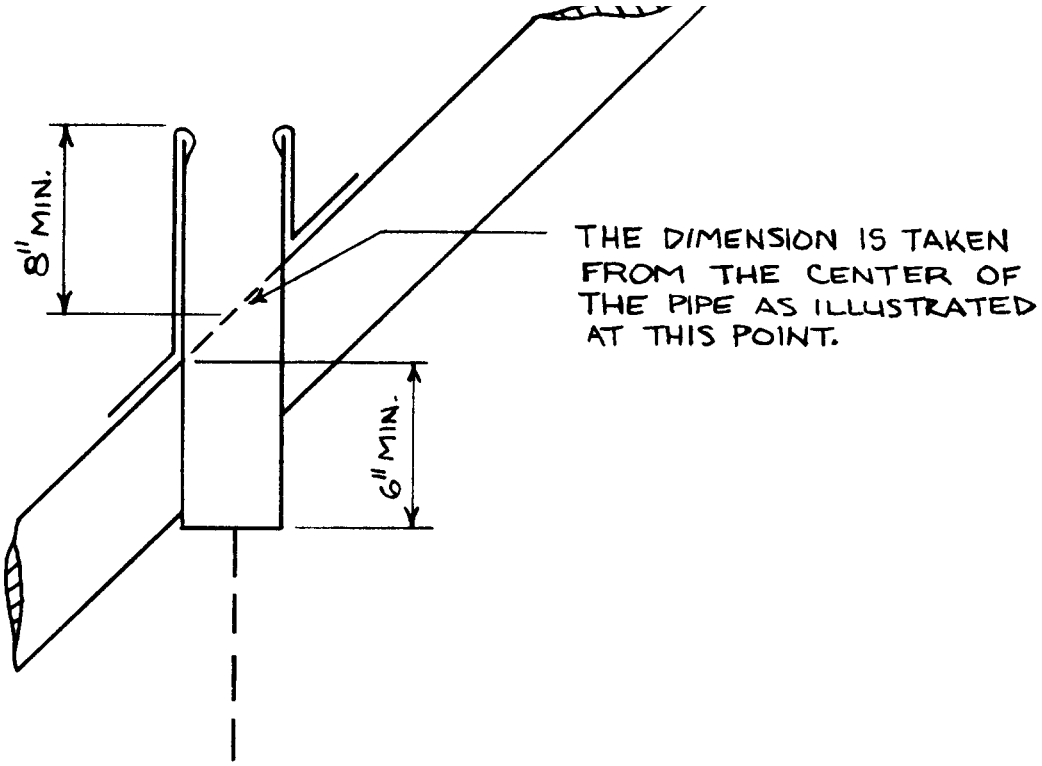


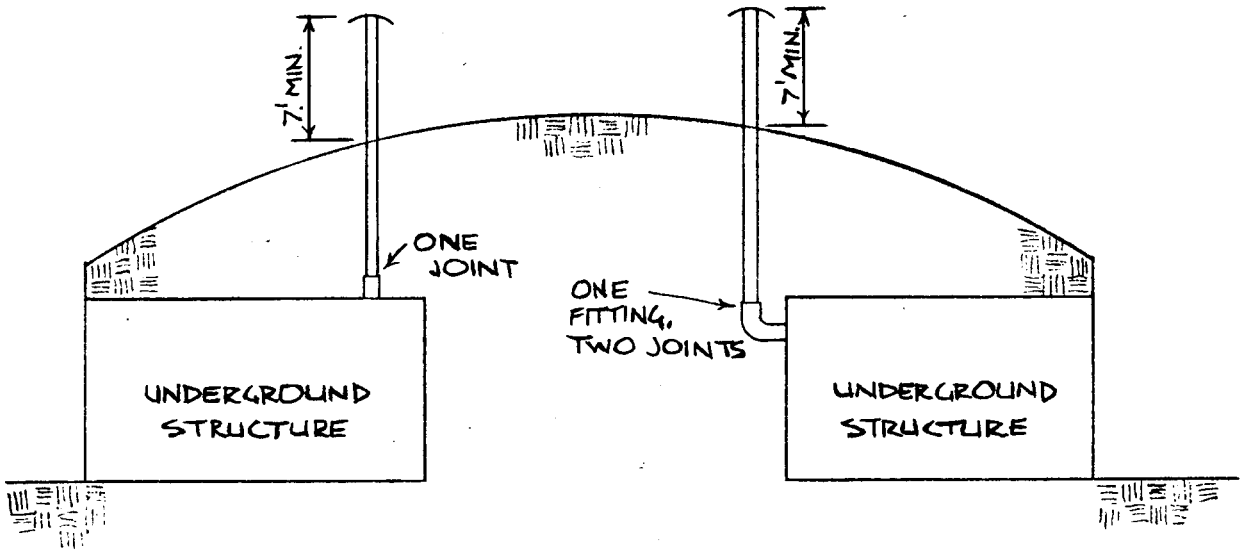


VENT TERMINALS FOR UNDERGROUND STRUCTURES

Removed by Register November 2004 No. 587. For current adm. code see: http://docs.legis.wisconsin.gov/code/admin_code.



**A–82.31 (17) (a)** COMBINATION DRAIN AND VENT STACKS.

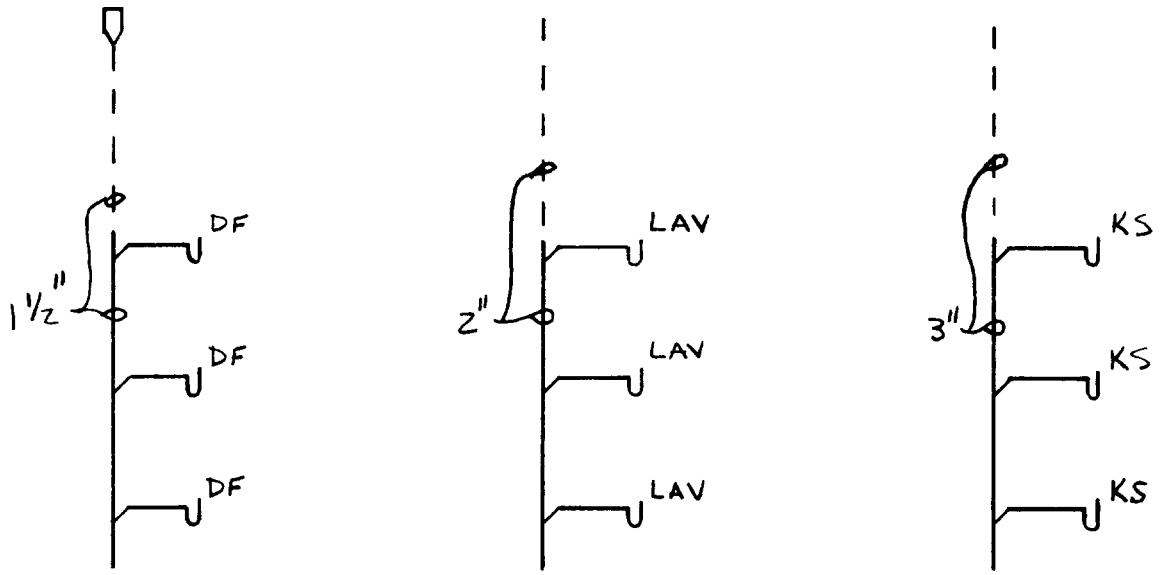


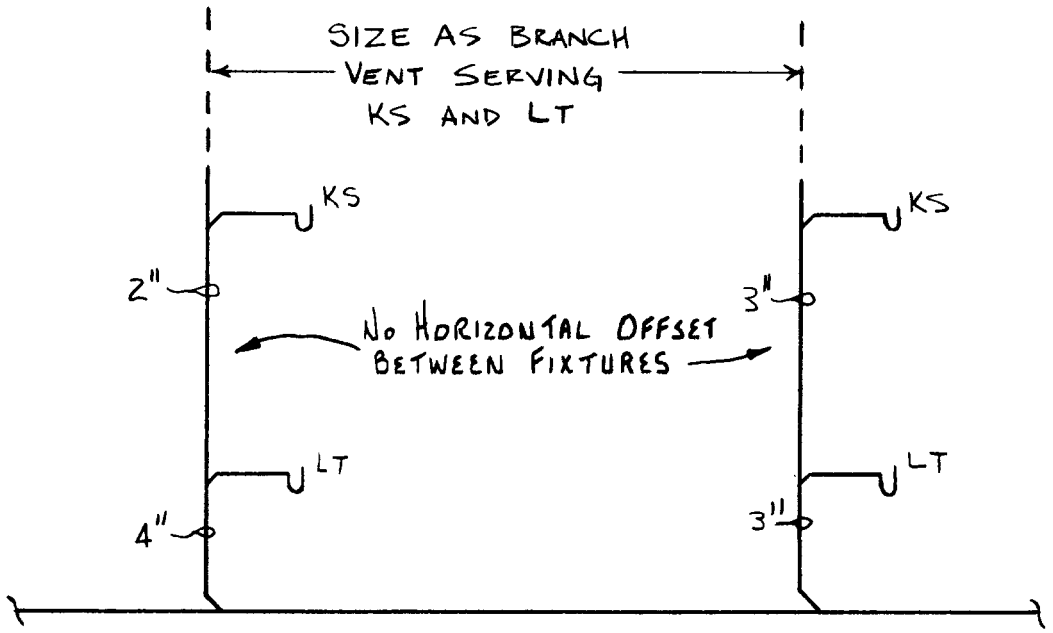

Removed by Register November 2004 No. 587. For current adm. code see: http://docs.legis.wisconsin.gov/code/admin_code.



**A–82.31 (17) (b)** COMBINATION DRAIN AND VENT BUILDING DRAIN.

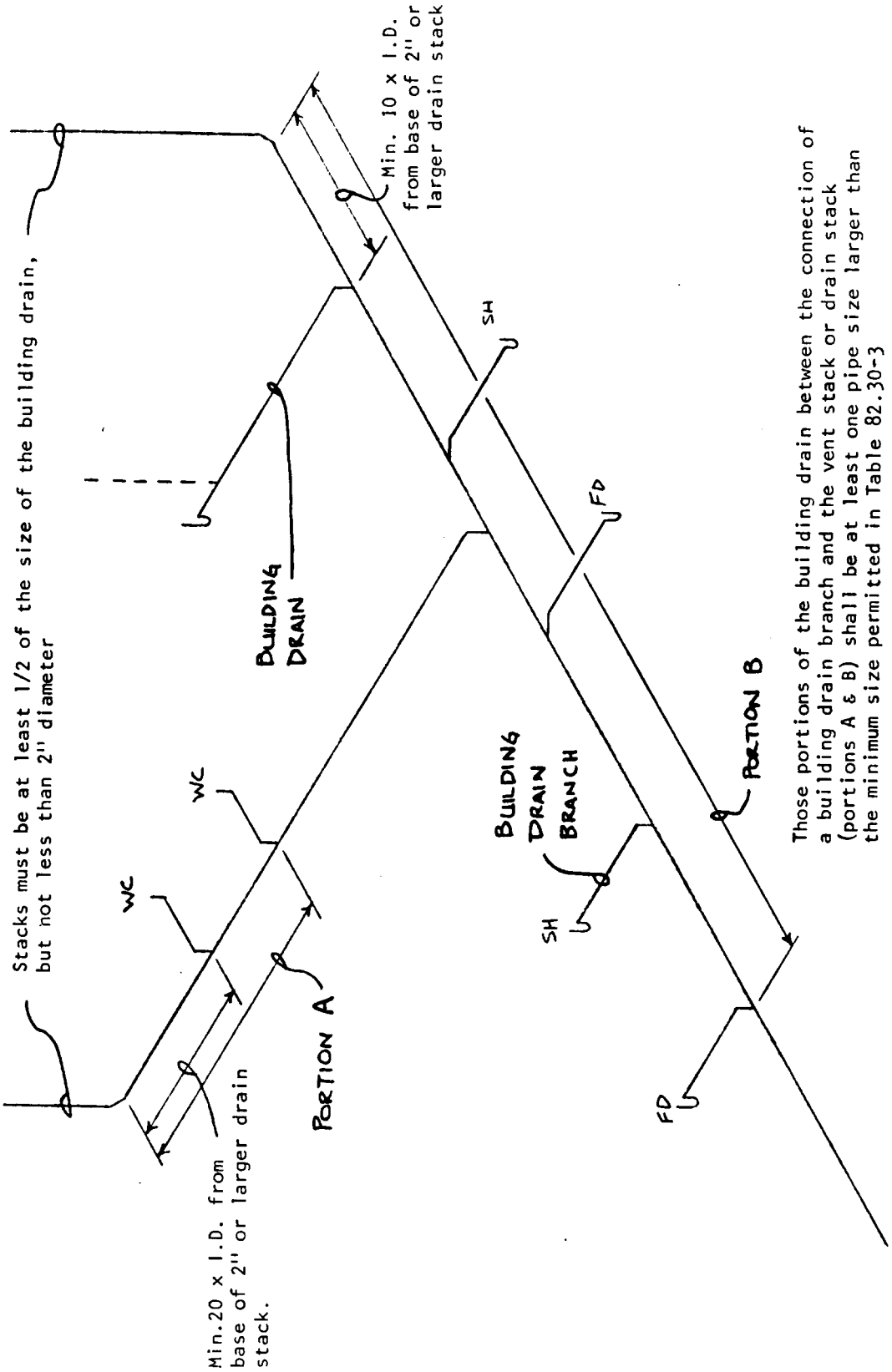

Removed by Register November 2004 No. 587. For current adm. code see: http://docs.legis.wisconsin.gov/code/admin_code.



**A–82.31 (17) (c)** COMBINATION DRAIN AND VENT LABORATORY SINK VENTING.

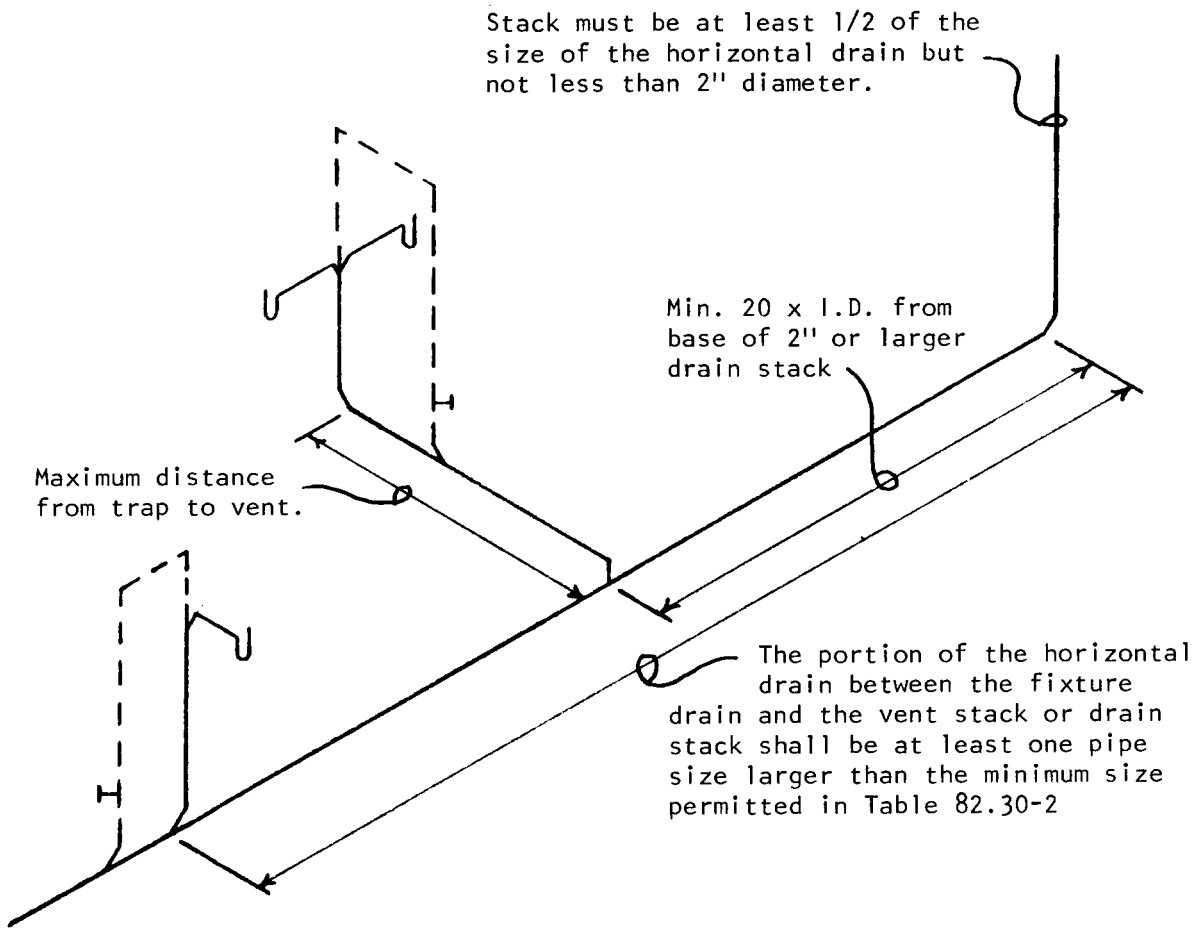


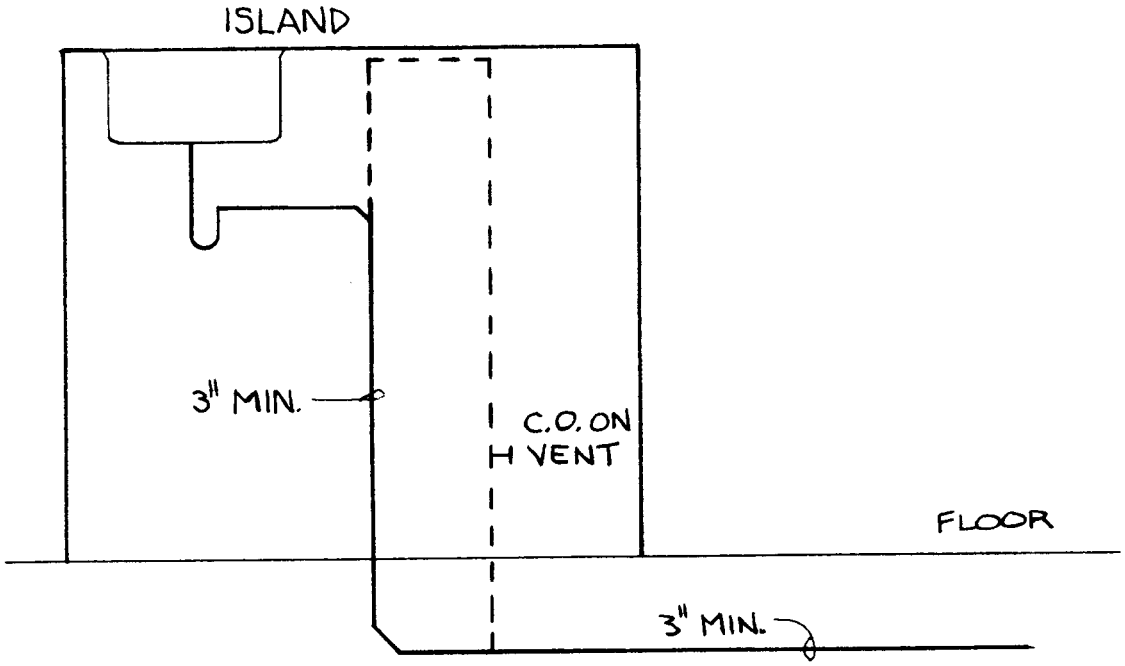

Removed by Register November 2004 No. 587. For current adm. code see: http://docs.legis.wisconsin.gov/code/admin_code.



**A–82.32 (4) (b)** INSTALLATION OF TRAPS.

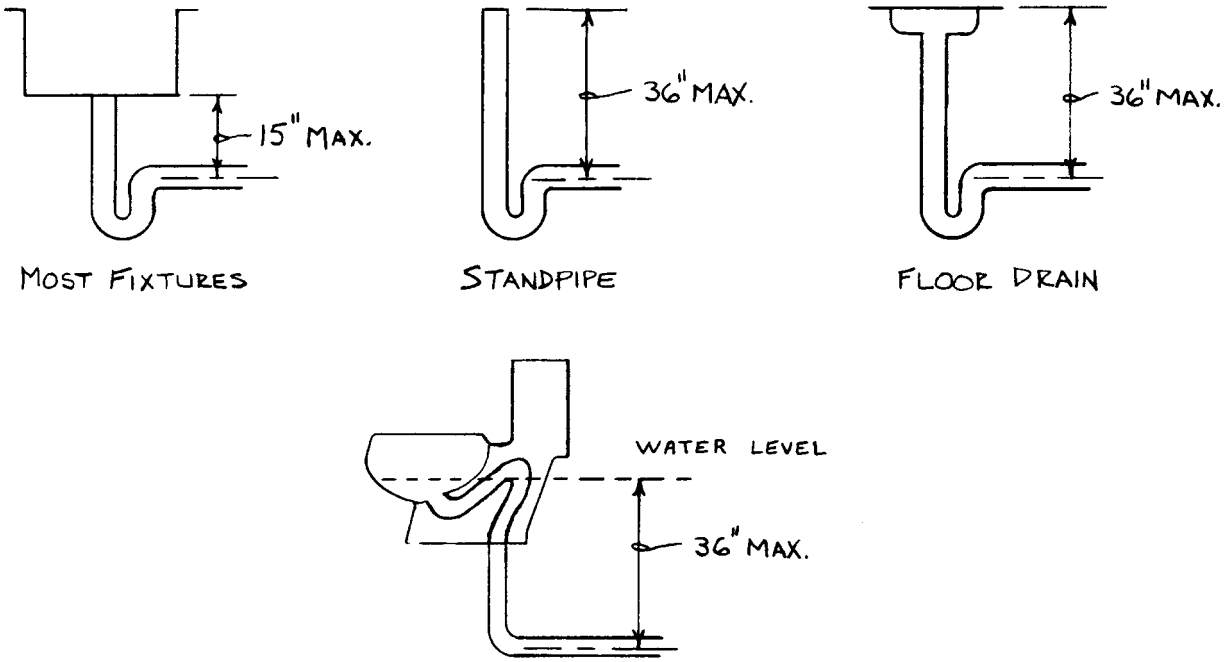


VERTICAL DISTANCE BETWEEN FIXTURE DRAIN OUTLET AND TRAP

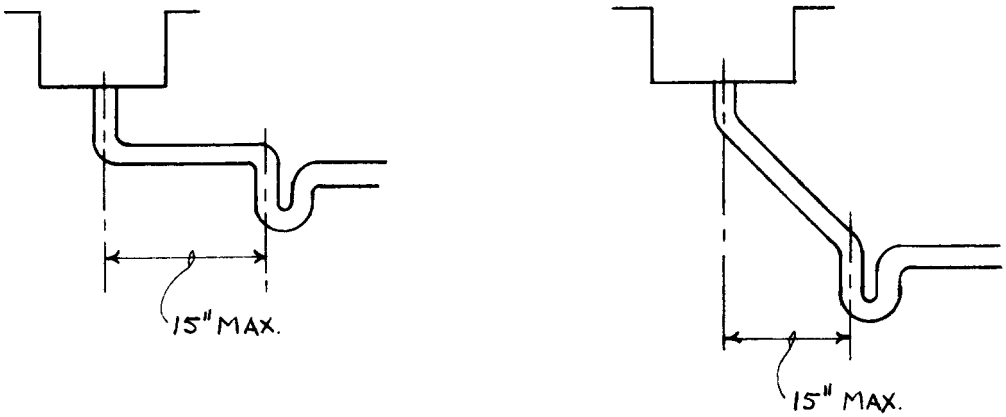


HORIZONTAL DISTANCE BETWEEN FIXTURE DRAIN OUTLET AND TRAP

Removed by Register November 2004 No. 587. For current adm. code see: http://docs.legis.wisconsin.gov/code/admin_code.



A–**82.33 (6)** INDIRECT AND LOCAL WASTE PIPING.

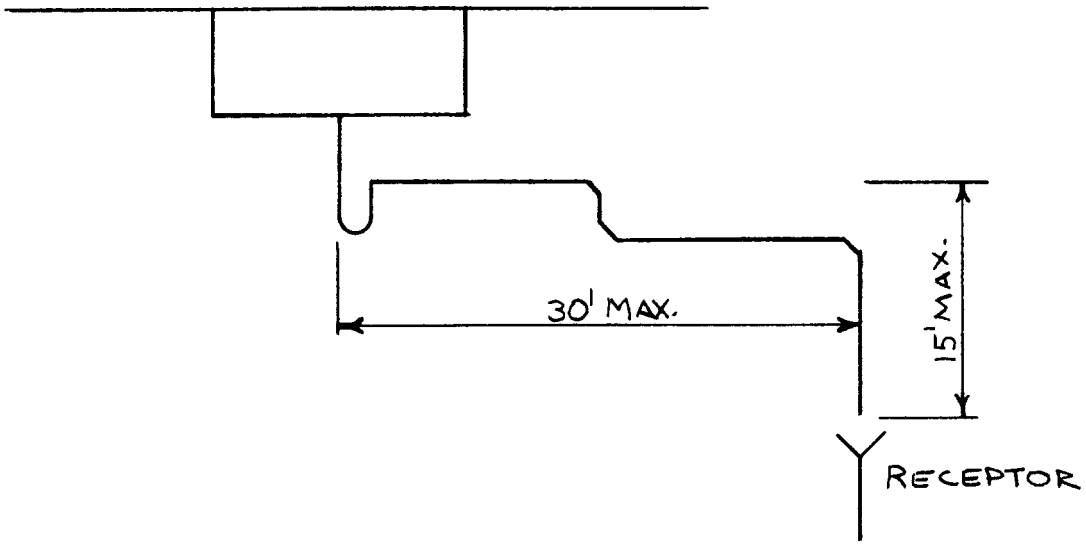


MAXIMUM LENGTH OF INDIRECT WASTE PIPE

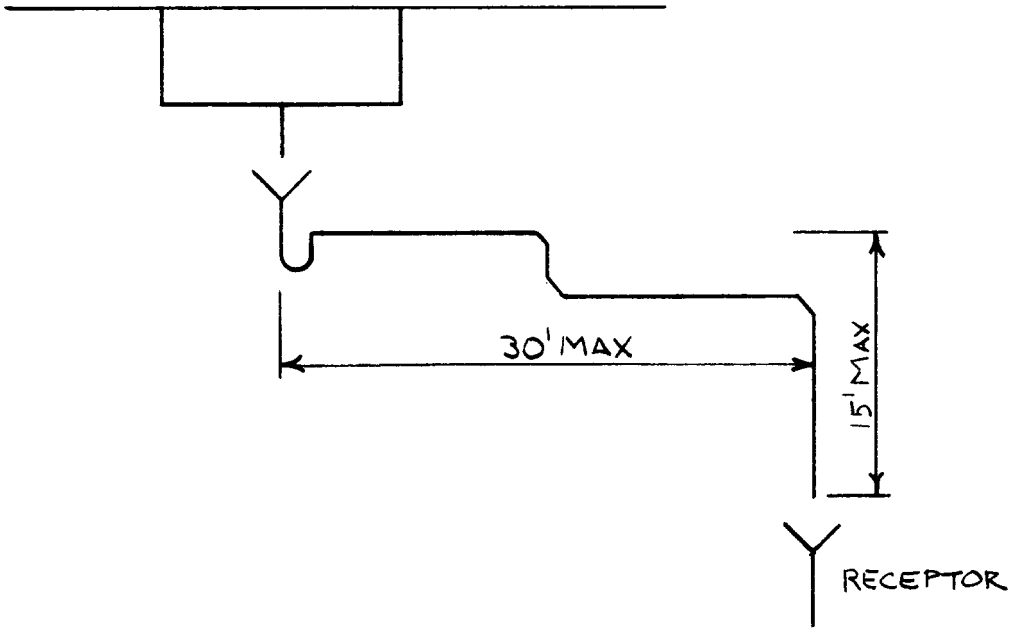


MAXIMUM LENGTH OF LOCAL WASTE PIPE

Removed by Register November 2004 No. 587. For current adm. code see: http://docs.legis.wisconsin.gov/code/admin_code.



**A–82.33 (7)** AIR–GAPS AND AIR–BREAKS.

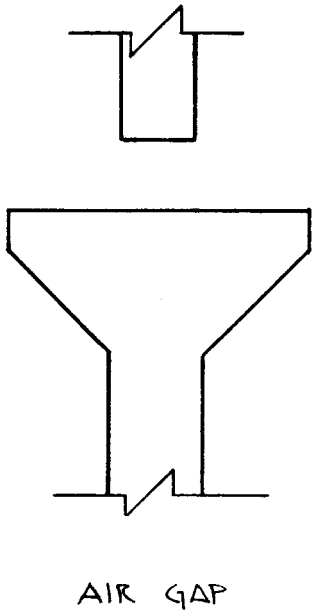


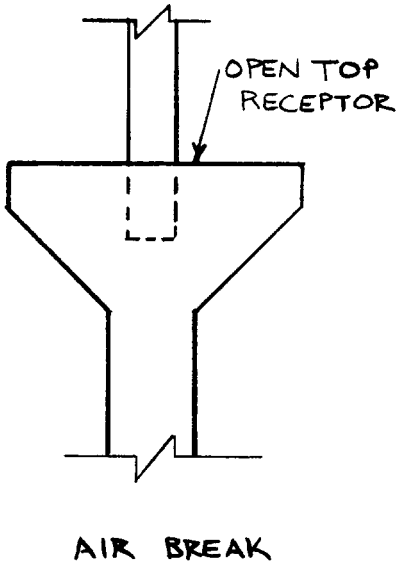


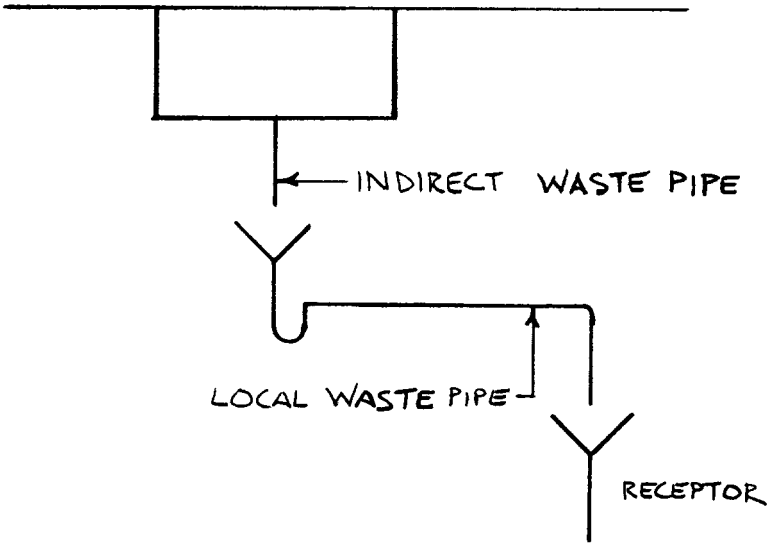

Removed by Register November 2004 No. 587. For current adm. code see: http://docs.legis.wisconsin.gov/code/admin_code.



**A–82.33 (8) (a)** WASTE SINKS AND STANDPIPES.

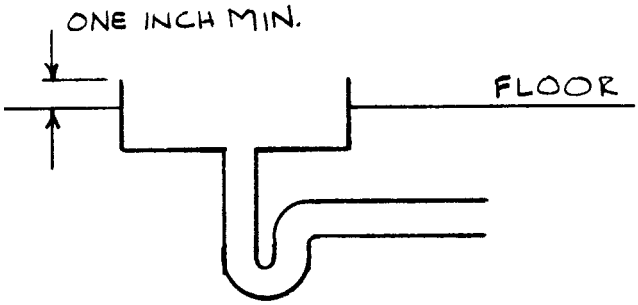


WASTE SINK IN FLOOR

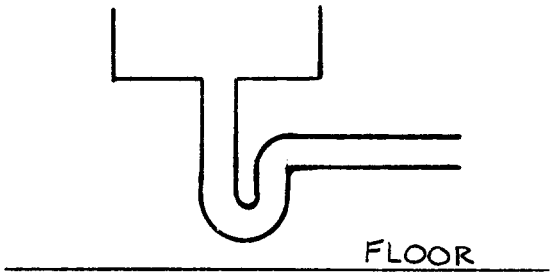


WASTE SINK ABOVE FLOOR

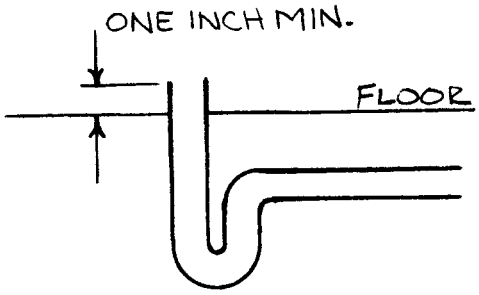


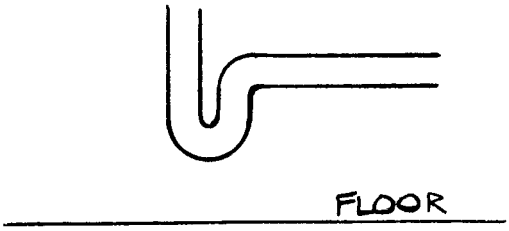

Removed by Register November 2004 No. 587. For current adm. code see: http://docs.legis.wisconsin.gov/code/admin_code.



**A–82.33 (8) (b)** FLOOR SINKS.

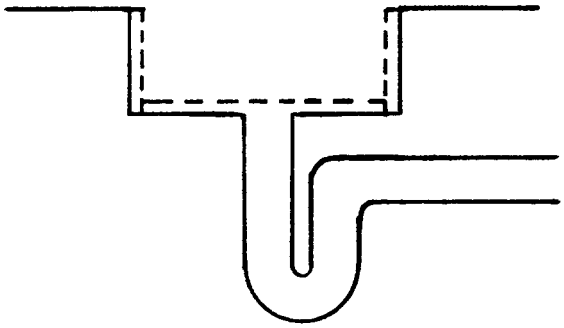

FLOOR SINK WITH BASKET

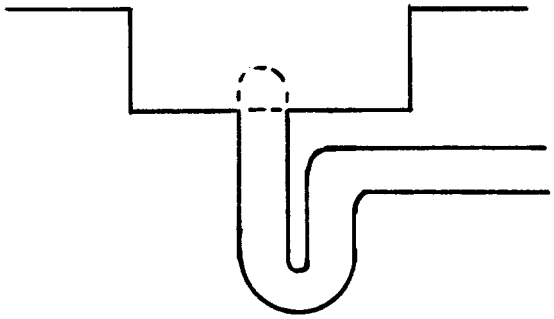

FLOOR SINK WITH DOME STRAINER

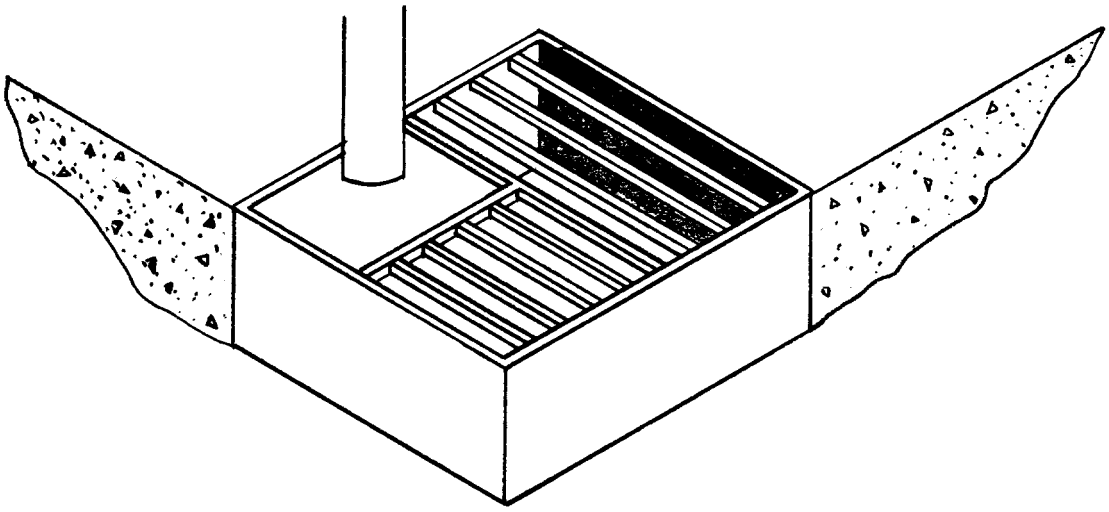

FLOOR SINK WITH GRATE OPENING FOR AIR GAP

Removed by Register November 2004 No. 587. For current adm. code see: http://docs.legis.wisconsin.gov/code/admin_code.



**A–82.33 (8) (c)** LOCAL WASTE PIPING.

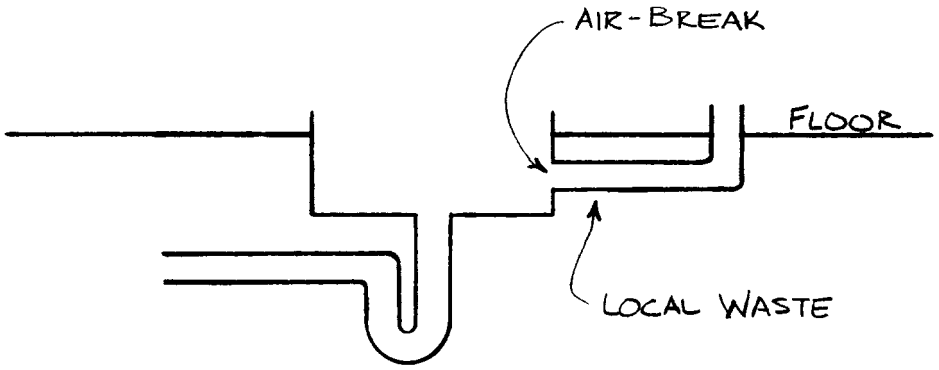


LOCAL WASTE LEADING TO A WASTE SINK, FLOOR SINK OR FLOOR DRAIN

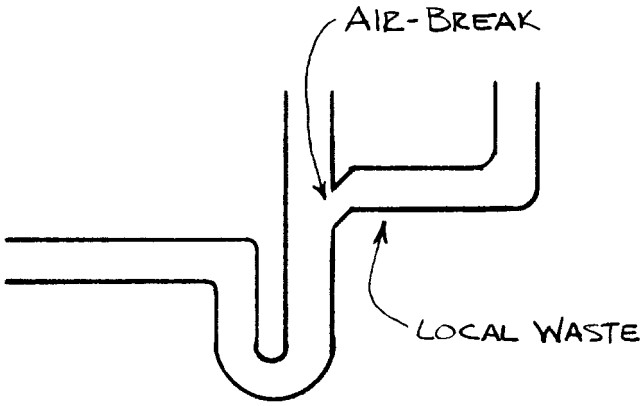


LOCAL WASTE LEADING TO A STANDPIPE

Removed by Register November 2004 No. 587. For current adm. code see: http://docs.legis.wisconsin.gov/code/admin_code.



**A–82.33 (8) (d)** LOCAL WASTE PIPING SERVING WATER HEATER RELIEF VALVES.

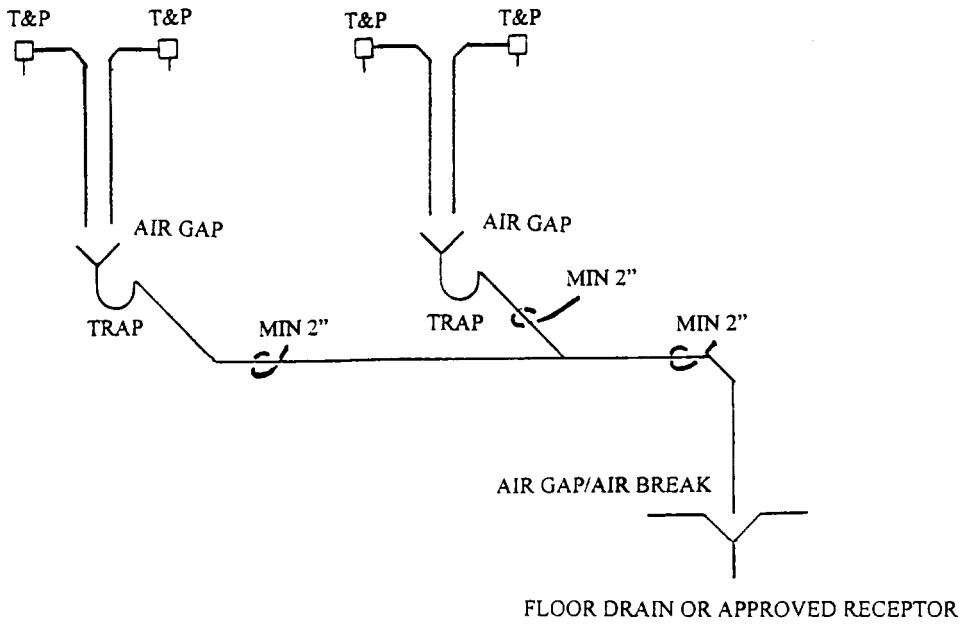


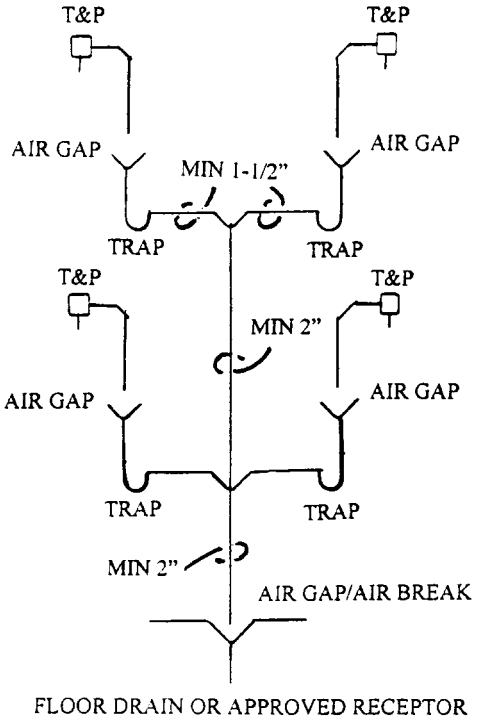


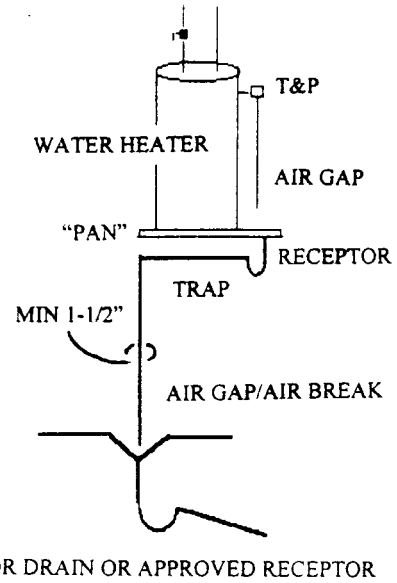

Removed by Register November 2004 No. 587. For current adm. code see: http://docs.legis.wisconsin.gov/code/admin_code.



**A–82.33 (9) (c)** COMMERCIAL GRAVITY DISCHARGE–TYPE CLOTHES WASHERS.

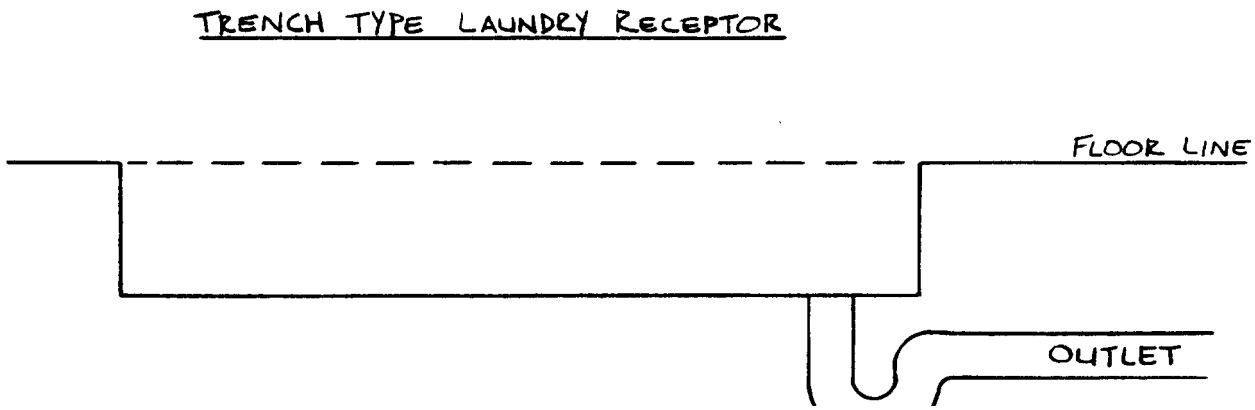


**A–82.33 (9) (d)** RESIDENTIAL–TYPE DISHWASHERS.

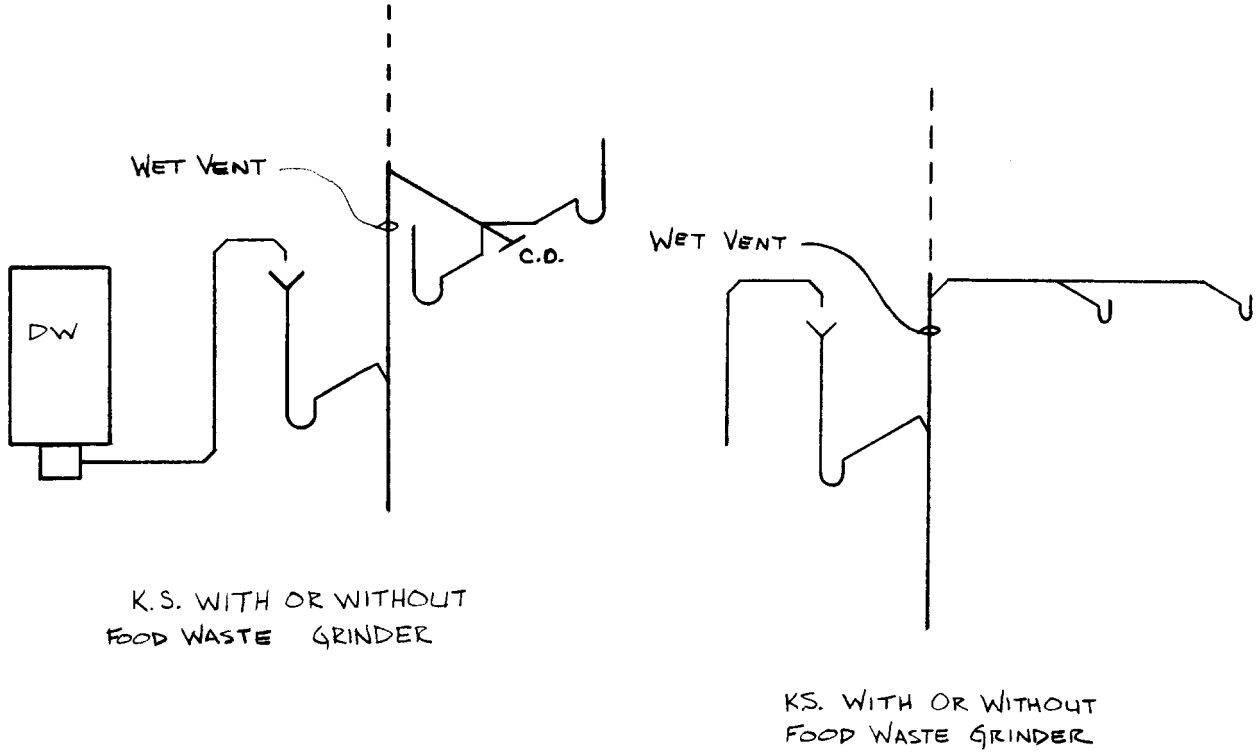


DISWASHER DISCHARGING TO A STANDPIPE

BELOW THE COUNTER TOP.

Removed by Register November 2004 No. 587. For current adm. code see: http://docs.legis.wisconsin.gov/code/admin_code.



**A–82.33 (9) (d)** RESIDENTIAL–TYPE DISHWASHERS.

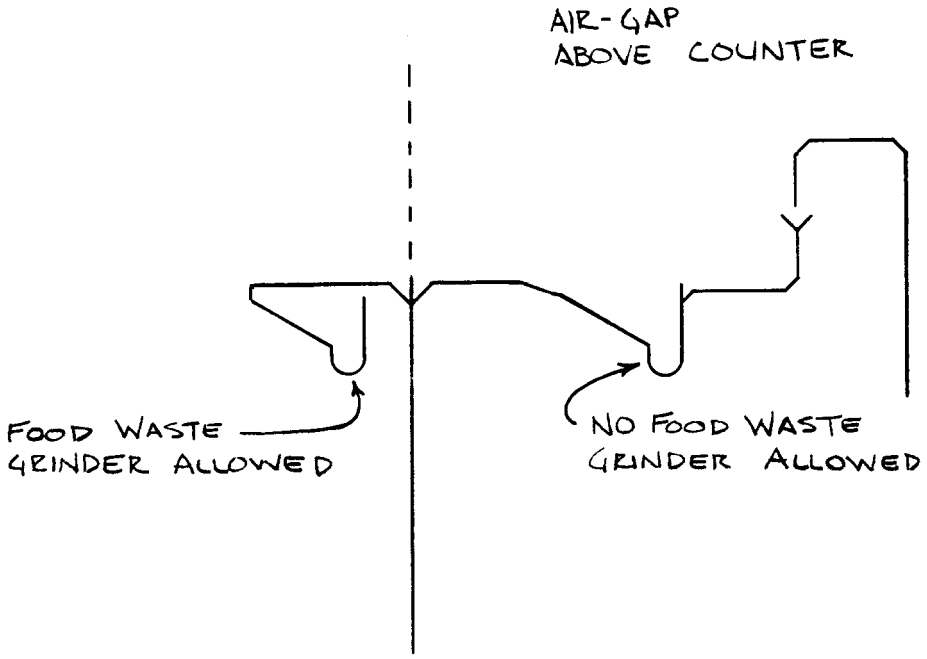


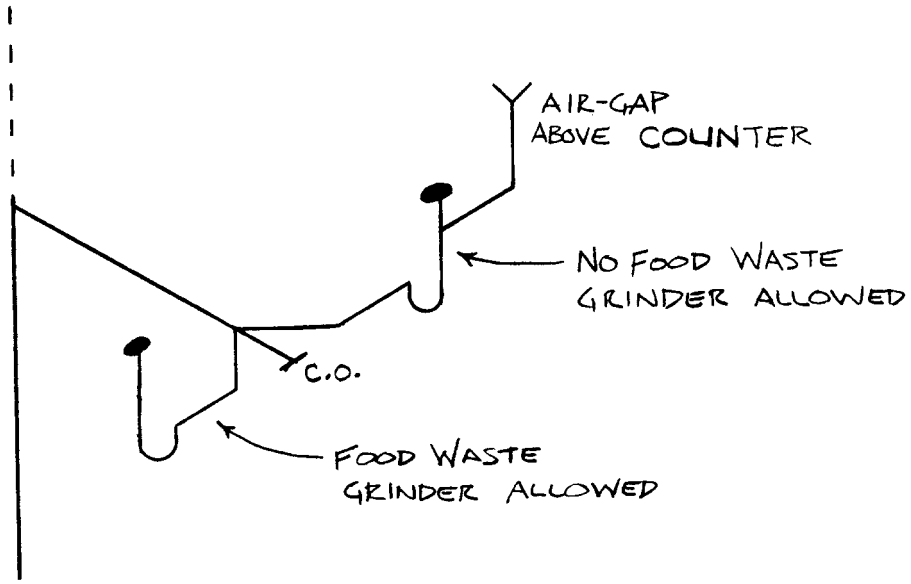

Removed by Register November 2004 No. 587. For current adm. code see: http://docs.legis.wisconsin.gov/code/admin_code.



**A–82.33 (9) (d)** RESIDENTIAL–TYPE DISHWASHERS.

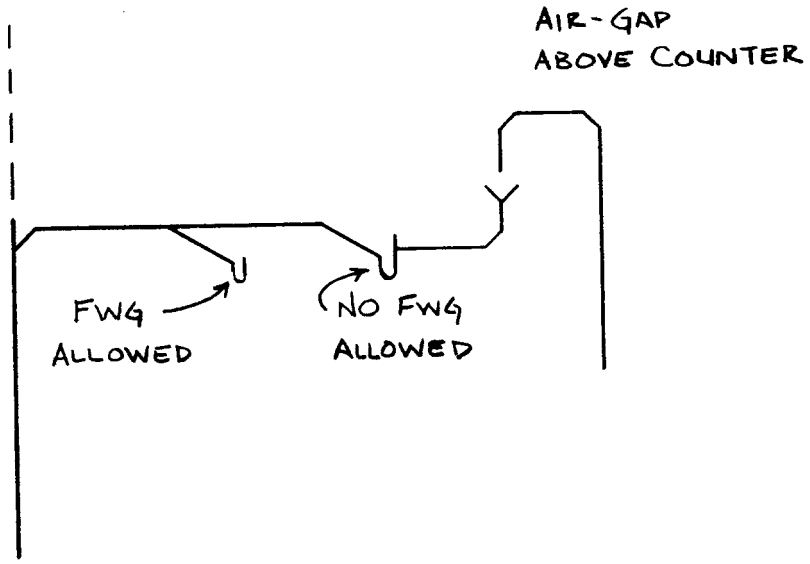


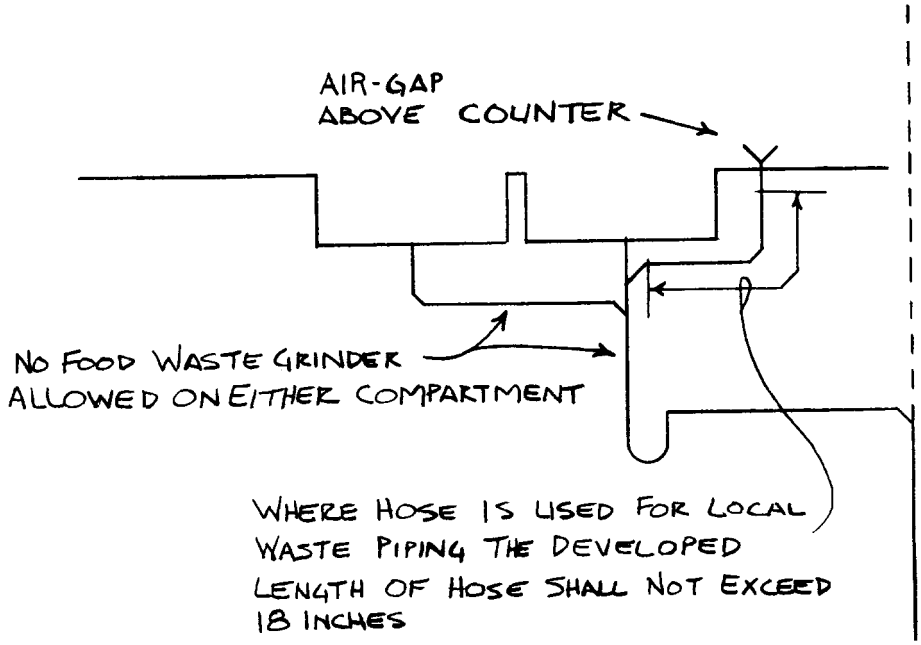

Removed by Register November 2004 No. 587. For current adm. code see: http://docs.legis.wisconsin.gov/code/admin_code.



**A–82.33 (9) (d)** COMMERCIAL DISHWASHERS.

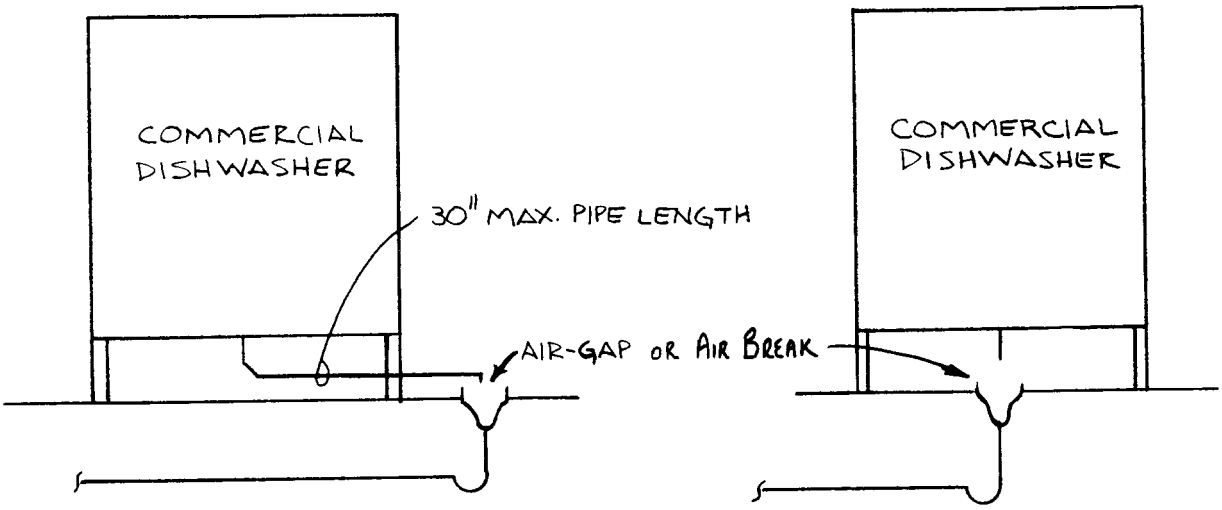

Removed by Register November 2004 No. 587. For current adm. code see: http://docs.legis.wisconsin.gov/code/admin_code.



**A−82.33 (9) (f)** ELEVATOR PIT SUBSOIL AND FLOOR DRAINS. Drains and sumps complying with ss. Comm 82.33 and 82.36 shall be provided.

**Note:** Section Comm 18.23 includes requirements for the installation of drains and sumps. Section Comm 18.23 reads: "Drains and sumps complying with ss. Comm 82.33 and 82.36 shall be provided. Drains connected directly to sanitary drain systems shall not be installed in elevator pits."

**ELEVATOR DRAIN DISCHARGE − STORM DRAIN CONNECTION**

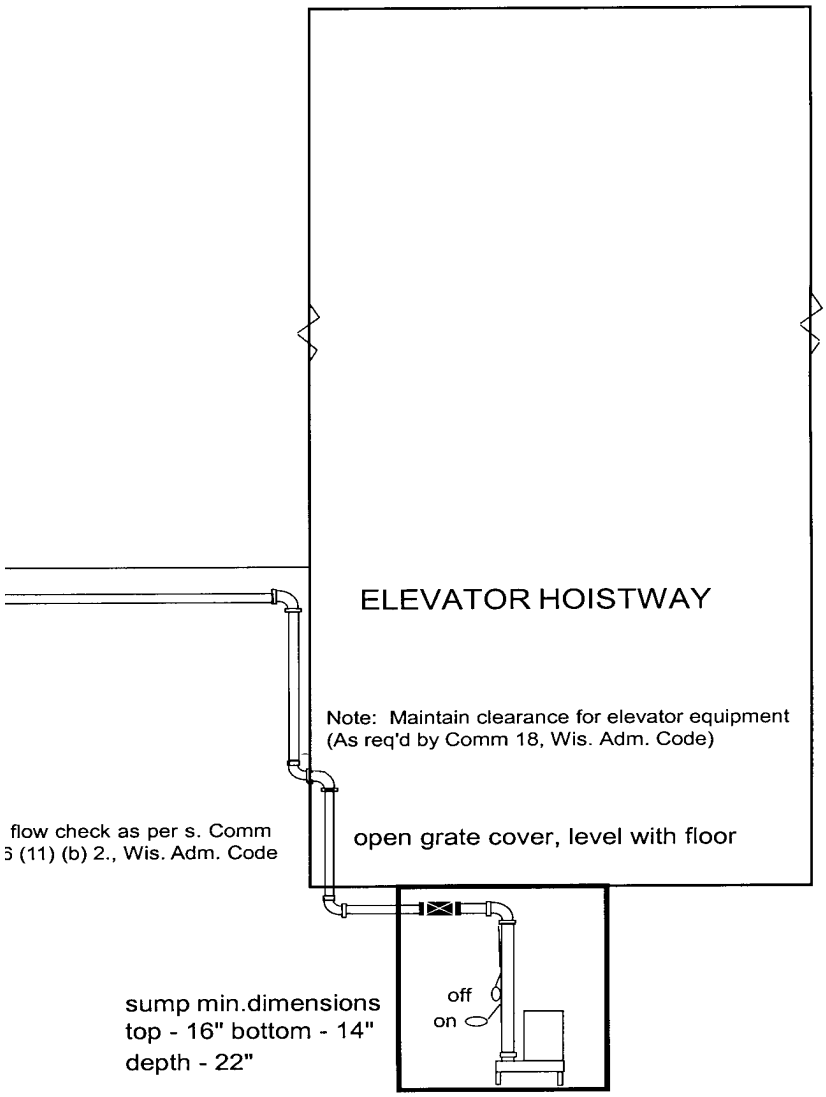

Removed by Register November 2004 No. 587. For current adm. code see: http://docs.legis.wisconsin.gov/code/admin_code.



**ELEVATOR DRAIN DISCHARGE – STORM DRAIN CONNECTION**

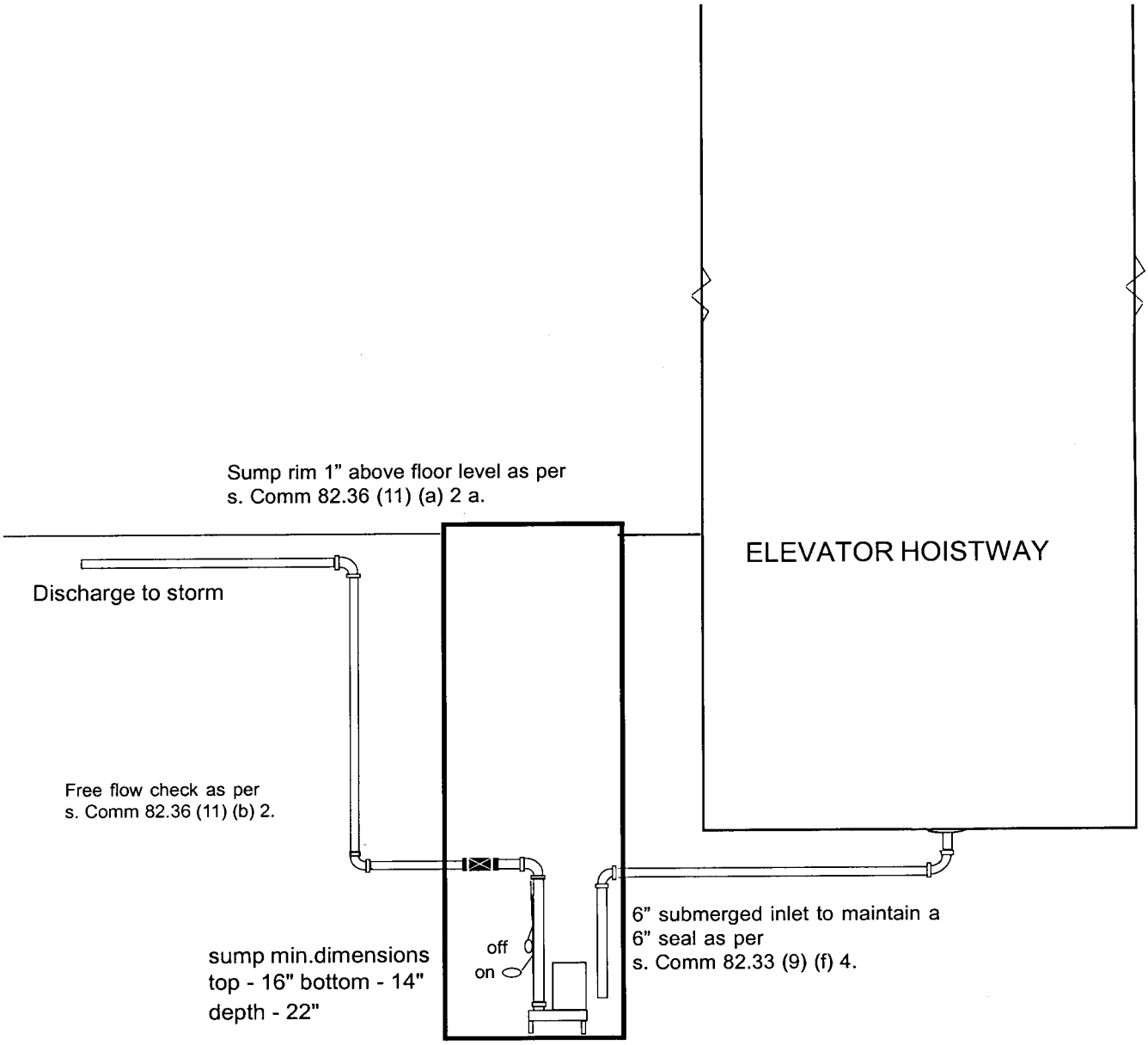

Removed by Register November 2004 No. 587. For current adm. code see: http://docs.legis.wisconsin.gov/code/admin_code.



**A–82.33 (9) (g) 1.** BAR AND SODA FOUNTAIN SINKS.

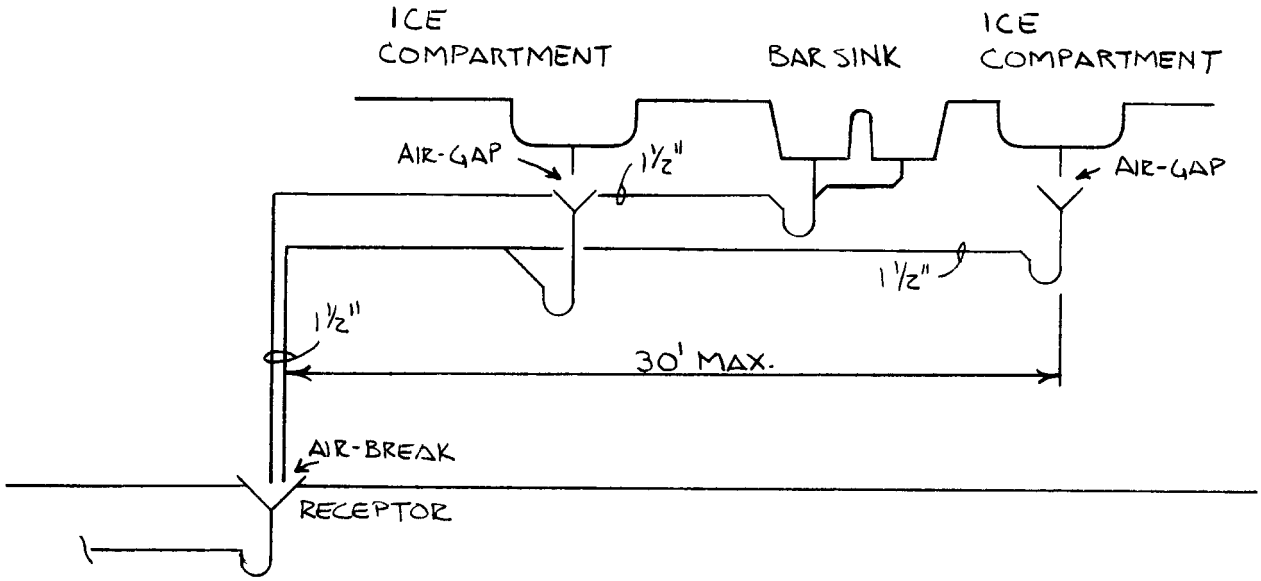


**A–82.33 (9) (g) 2.** BEER TAPS, COFFEE MAKERS, GLASS FILLERS AND SODA DISPENSERS.

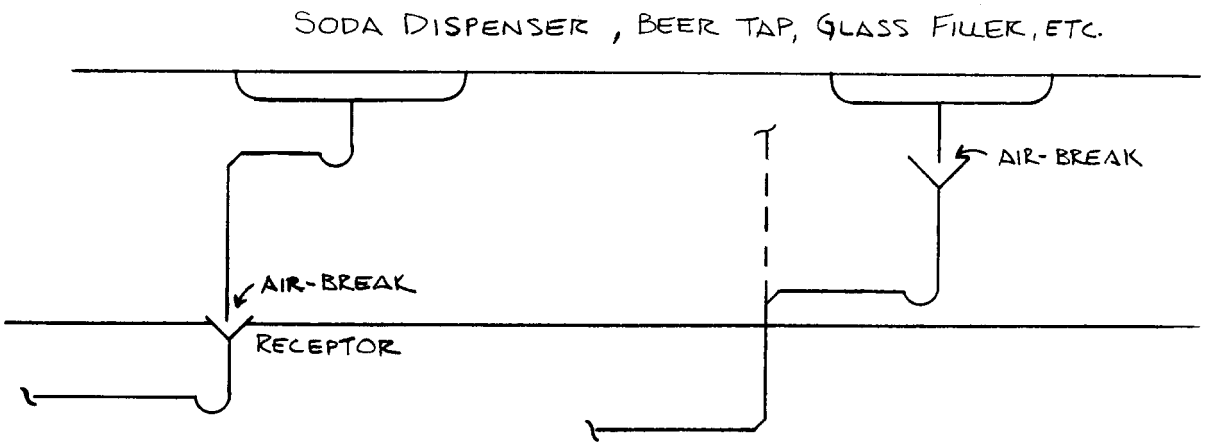

Removed by Register November 2004 No. 587. For current adm. code see: http://docs.legis.wisconsin.gov/code/admin_code.



A–**82.33 (9) (g) 3.** NOVELTY BOXES, AND ICE COMPARTMENTS AND ICE CREAM DIPPER WELLS.

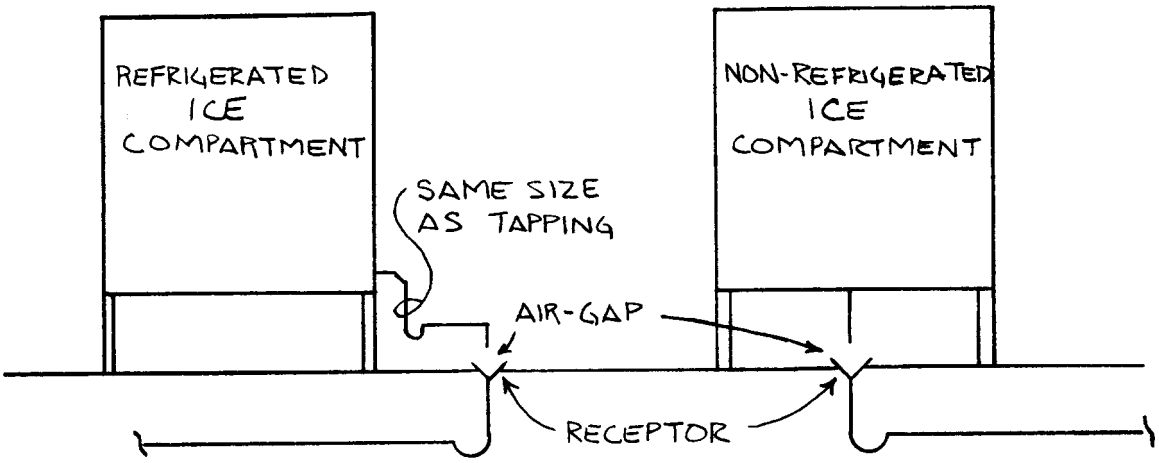


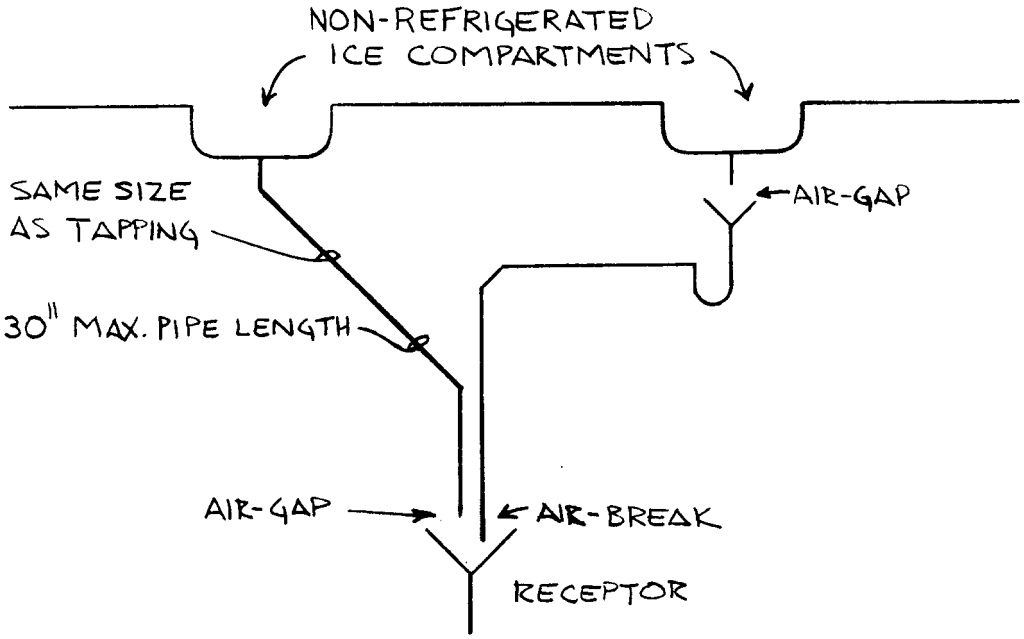

Removed by Register November 2004 No. 587. For current adm. code see: http://docs.legis.wisconsin.gov/code/admin_code.



**A–82.33 (9) (g) 4.** REFRIGERATED FOOD STORAGE ROOMS, COMPARTMENTS, AND DISPLAY CASES.

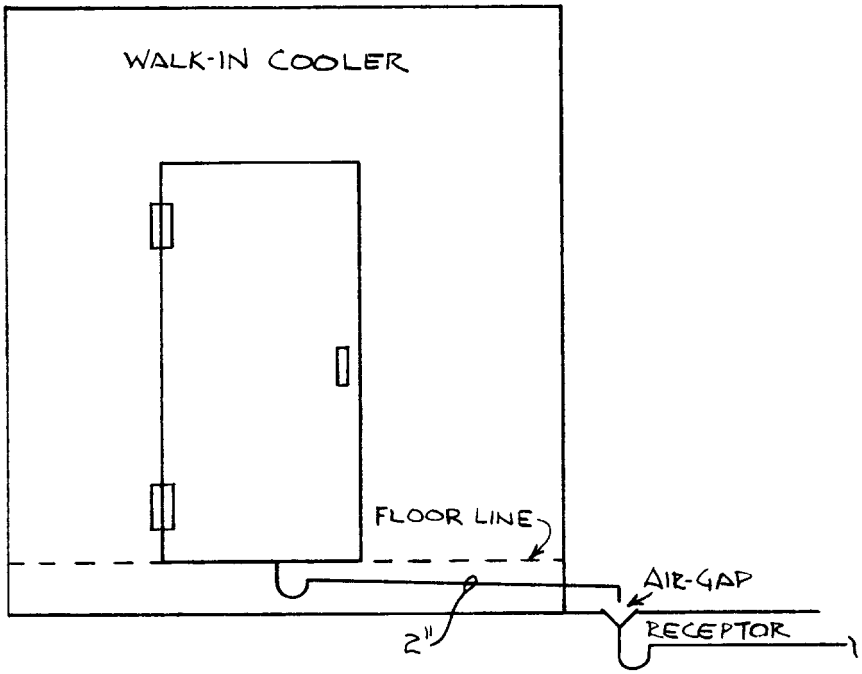


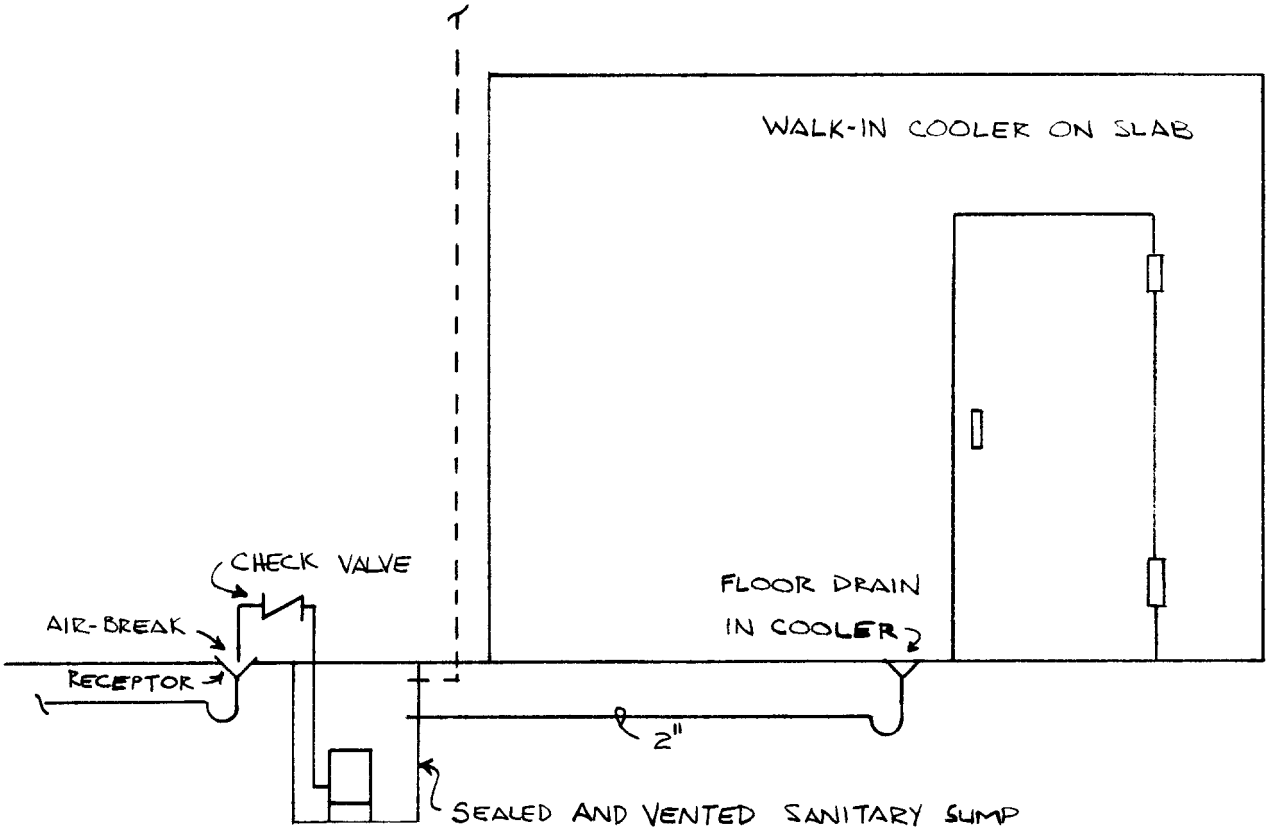

Removed by Register November 2004 No. 587. For current adm. code see: http://docs.legis.wisconsin.gov/code/admin_code.



**A–82.33 (9) (g) 5.** MISCELLANEOUS FOOD HANDLING EQUIPMENT.

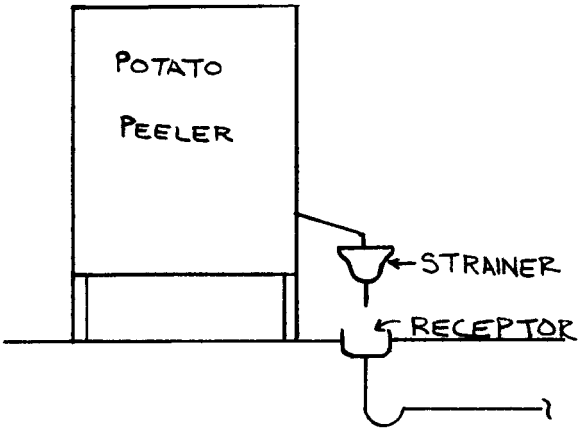


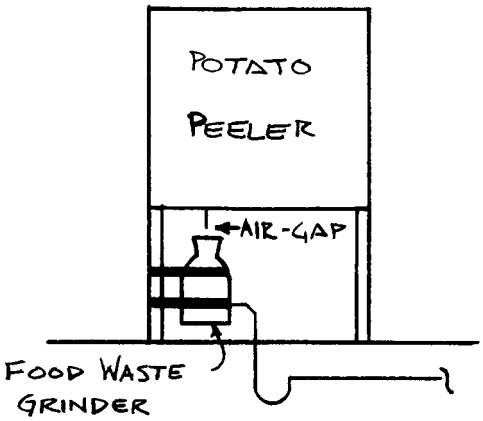


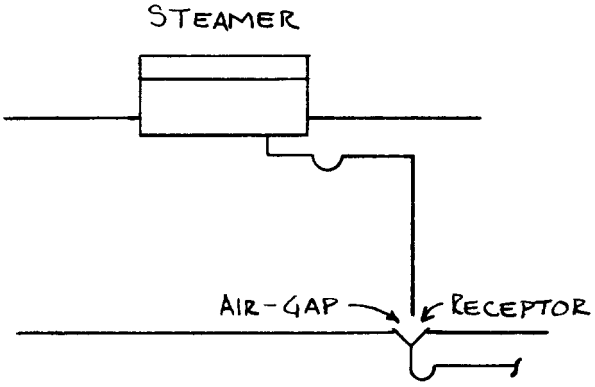


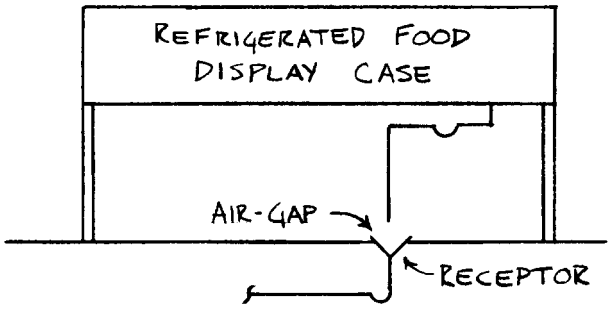

Removed by Register November 2004 No. 587. For current adm. code see: http://docs.legis.wisconsin.gov/code/admin_code.



**A–82.33 (9) (g) 5.** MISCELLANEOUS FOOD HANDLING EQUIPMENT.

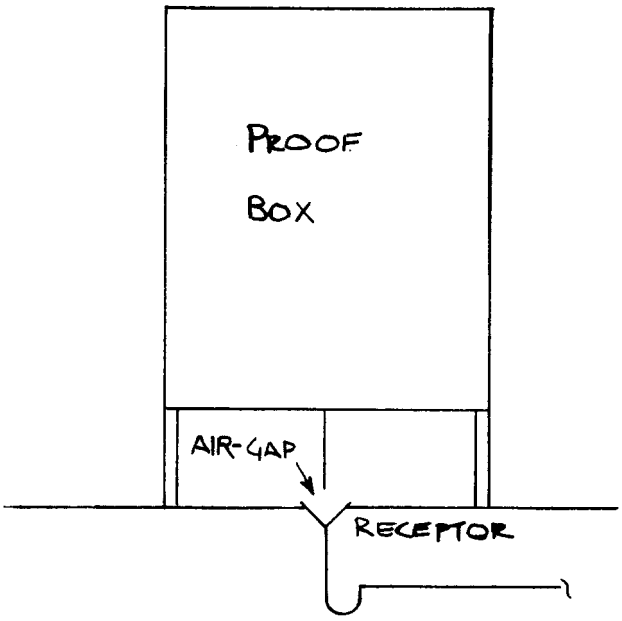


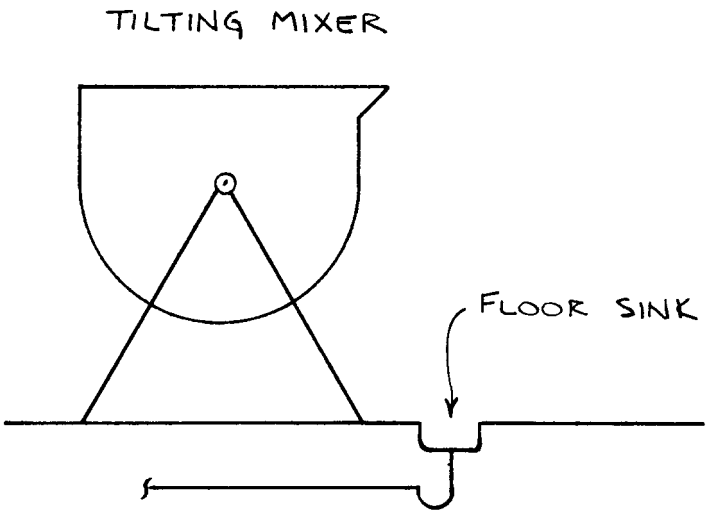

Removed by Register November 2004 No. 587. For current adm. code see: http://docs.legis.wisconsin.gov/code/admin_code.



**A–82.33 (9) (g) 5.** MISCELLANEOUS FOOD HANDLING EQUIPMENT.

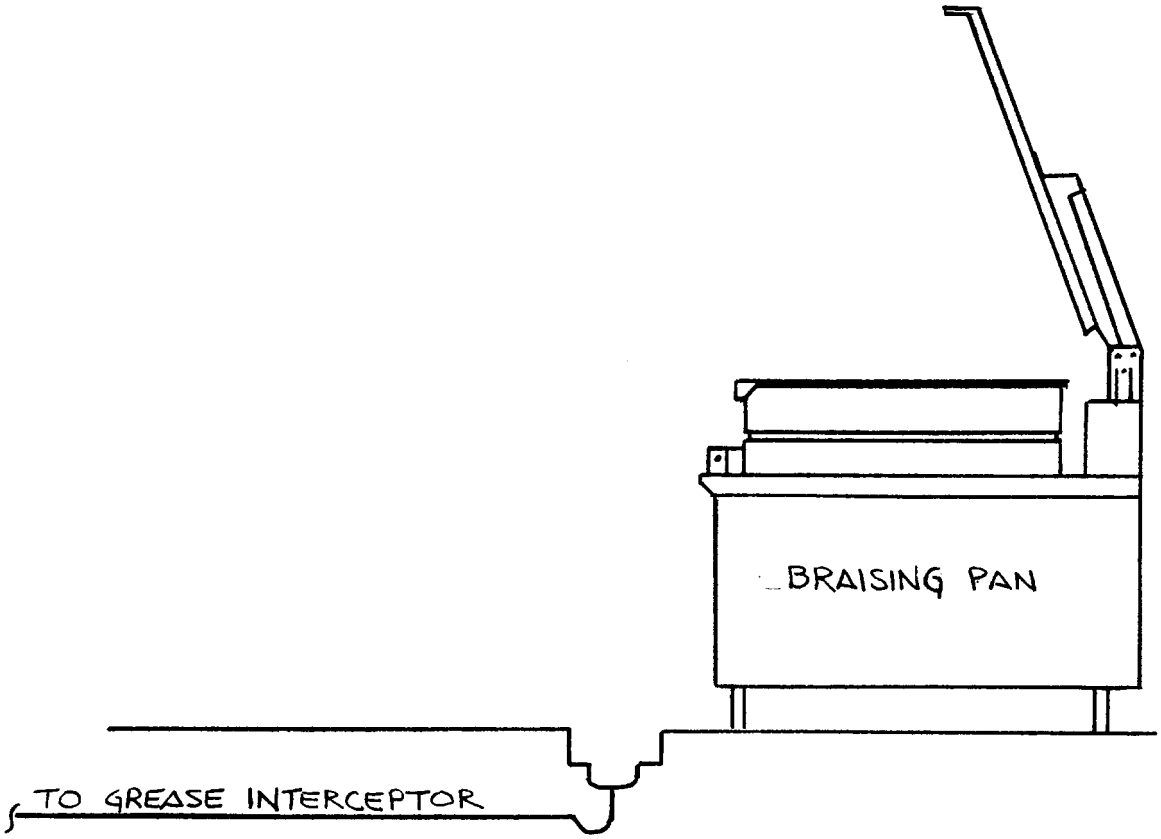


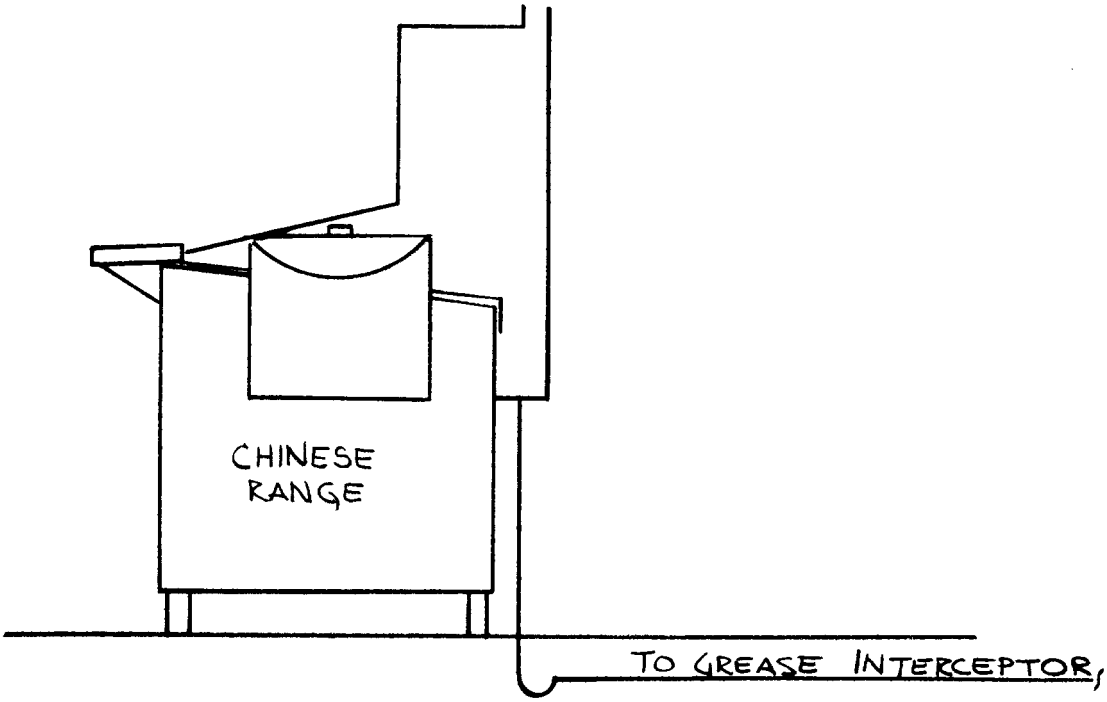

Removed by Register November 2004 No. 587. For current adm. code see: http://docs.legis.wisconsin.gov/code/admin_code.



**A–82.33 (9) (g) 5.** MISCELLANEOUS FOOD HANDLING EQUIPMENT.

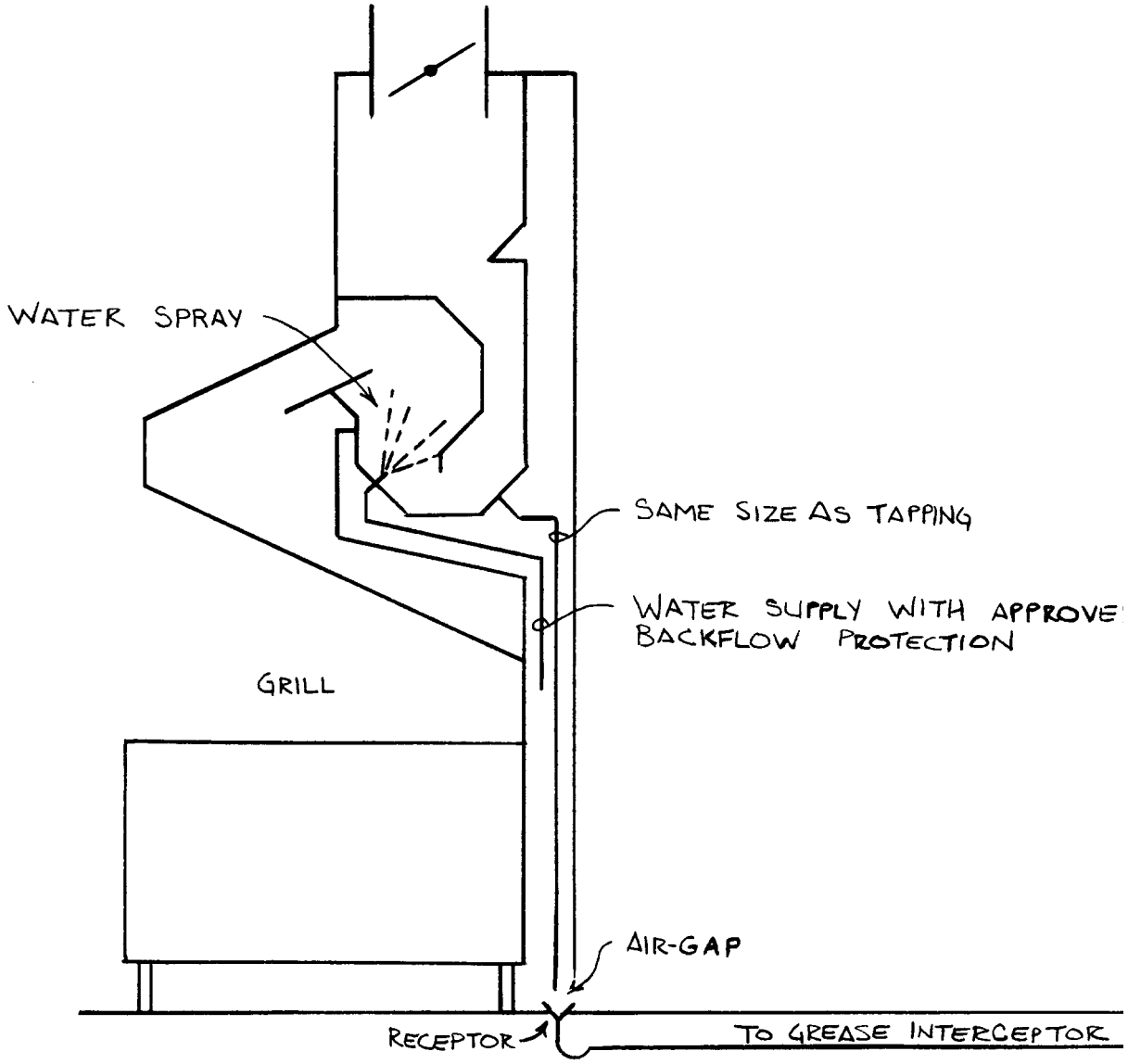


EXHAUST HOOD WASHER

Removed by Register November 2004 No. 587. For current adm. code see: http://docs.legis.wisconsin.gov/code/admin_code.



**A–82.34 (4) (a)** PUBLIC BUILDINGS.

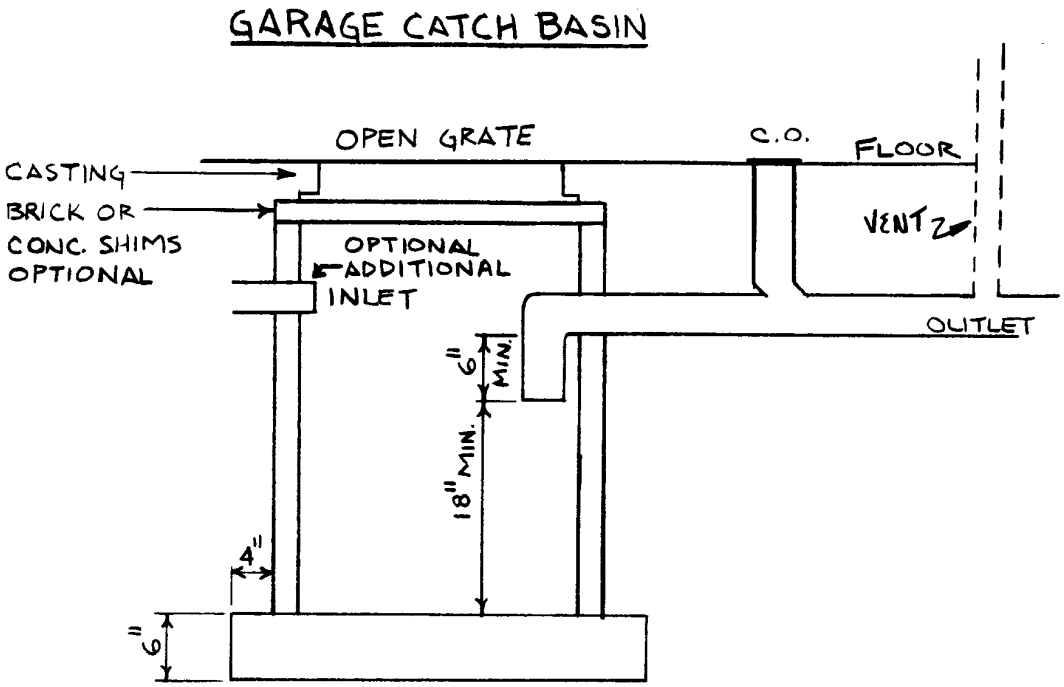


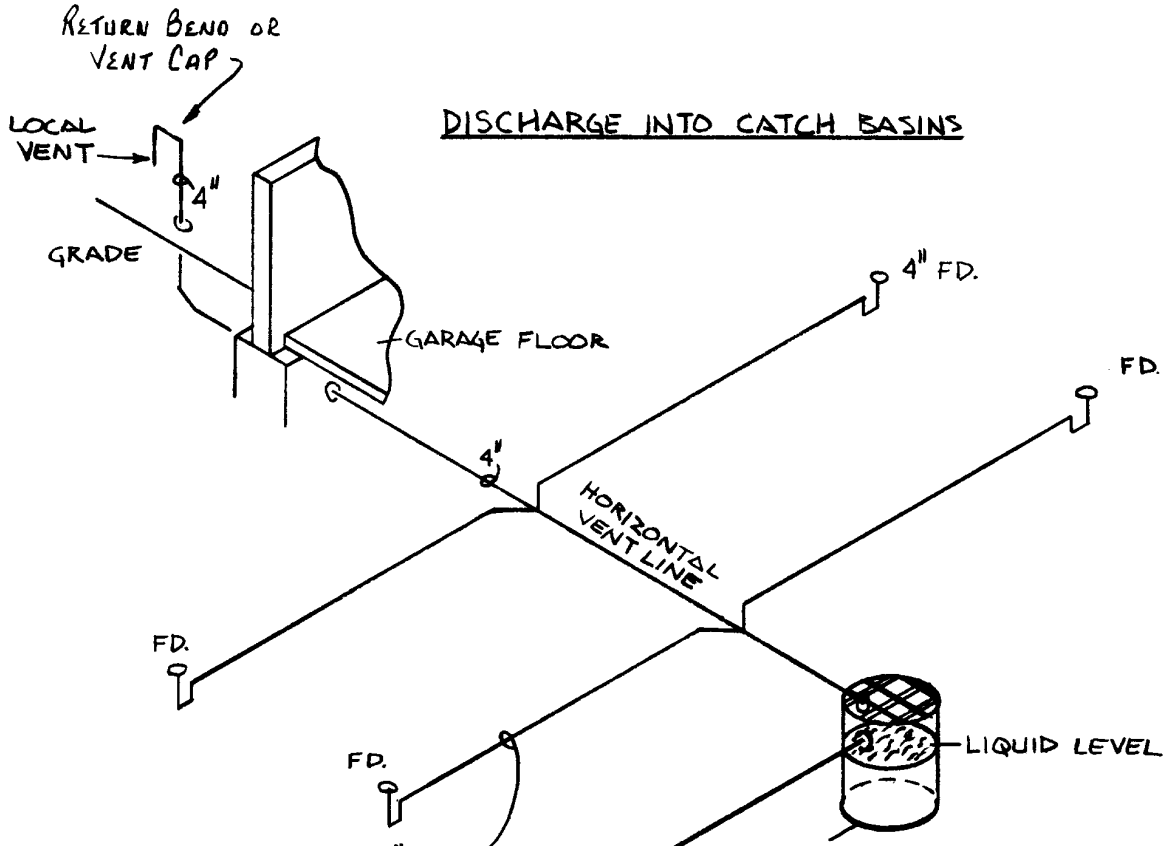

Removed by Register November 2004 No. 587. For current adm. code see: http://docs.legis.wisconsin.gov/code/admin_code.



**A–82.34 (4) (a)** PUBLIC BUILDINGS.

| Diameter of Catch Basin | Volume in cubic feet per foot of depth | Diameter of Catch Basin | Volume in cubic feet per foot of depth |
|---|---|---|---|
| 36 | 7.1 | 45 | 11.1 |
| 37 | 7.5 | 46 | 11.6 |
| 38 | 7.9 | 47 | 12.1 |
| 39 | 8.3 | 48 | 12.6 |
| 40 | 8.7 | 54 | 15.9 |
| 41 | 9.2 | 60 | 19.7 |
| 42 | 9.7 | 66 | 23.8 |
| 43 | 10.1 | 72 | 28.3 |
| 44 | 10.6 | 84 | 38.6 |

**A–82.34 (4) (a)** PUBLIC BUILDINGS.

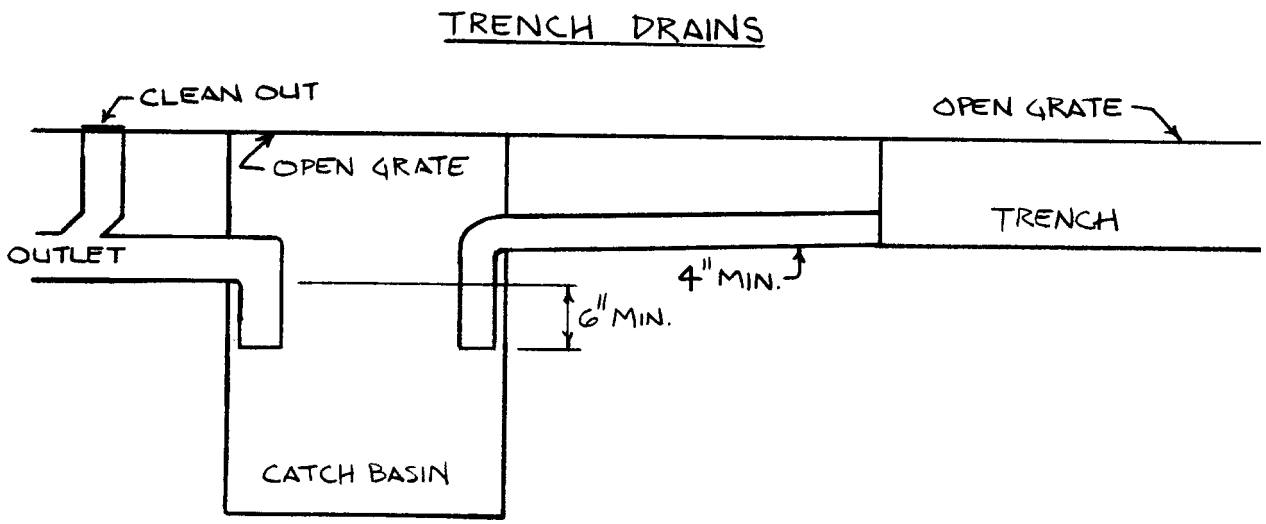

Removed by Register November 2004 No. 587. For current adm. code see: http://docs.legis.wisconsin.gov/code/admin_code.



**A–82.34 (4) (b)** GARAGES FOR ONE– AND 2–FAMILY DWELLINGS.

TYPICAL FLOOR DRAIN WITH SOLID BOTTOM SEDIMENT BASKET

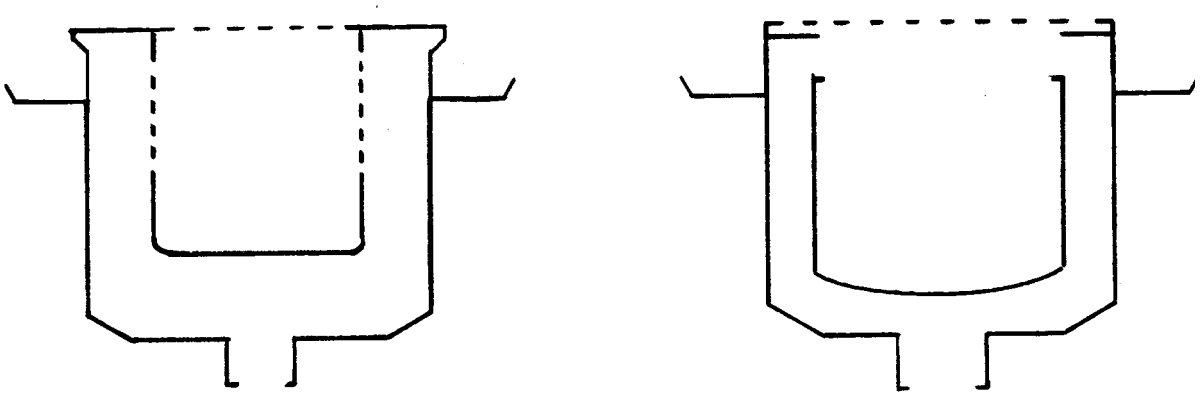

Removed by Register November 2004 No. 587. For current adm. code see: http://docs.legis.wisconsin.gov/code/admin_code.



**A−82.34 (4)−1. GARAGE CATCH BASIN WITH TRAPPED FIXTURES.**

Removed by Register November 2004 No. 587. For current adm. code see: http://docs.legis.wisconsin.gov/code/admin_code.



**A−82.34 (4)−3. GARAGE CATCH BASIN WITH FIXTURES WITHOUT TRAPS.**

Removed by Register November 2004 No. 587. For current adm. code see: http://docs.legis.wisconsin.gov/code/admin_code.



**A−82.34 (4)−5. GARAGE CATCH BASIN WITH TRAPPED FIXTURES.**

**A−82.34 (5) (b)** EXTERIOR GREASE INTERCEPTORS.

GREASE INTERCEPTOR MANHOLE LOCATION

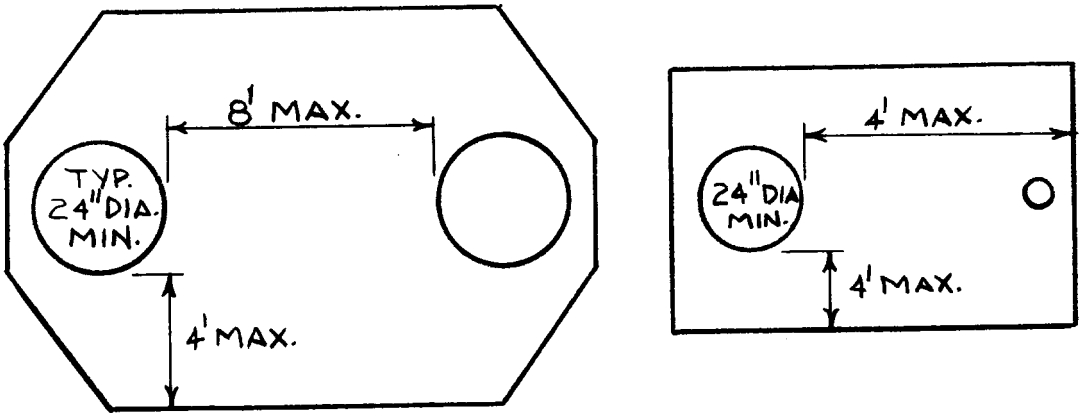

Removed by Register November 2004 No. 587. For current adm. code see: http://docs.legis.wisconsin.gov/code/admin_code.



**A–82.34 (5) (b)** EXTERIOR GREASE INTERCEPTORS.

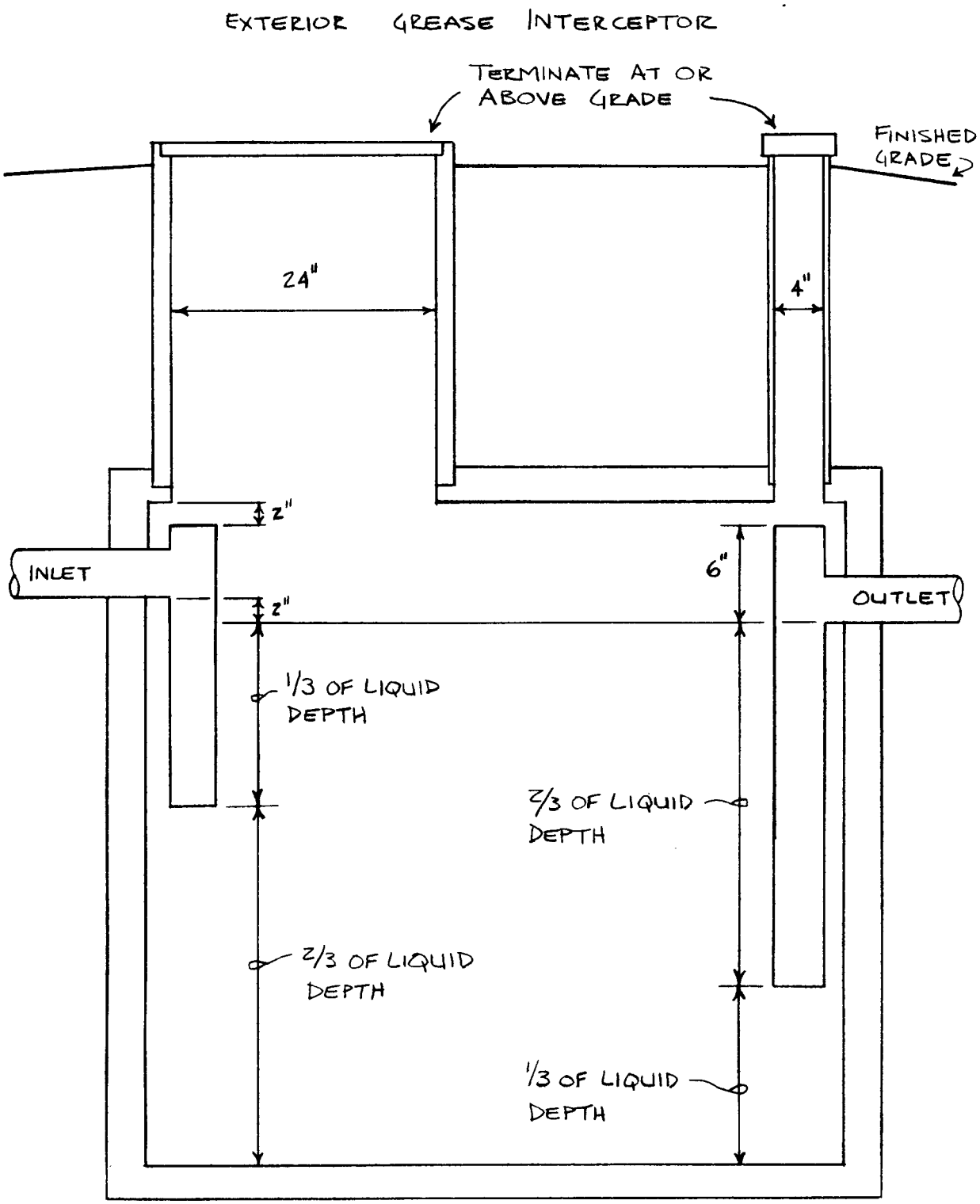

Removed by Register November 2004 No. 587. For current adm. code see: http://docs.legis.wisconsin.gov/code/admin_code.



**A–82.34 (5) (c)** INTERIOR GREASE INTERCEPTORS.

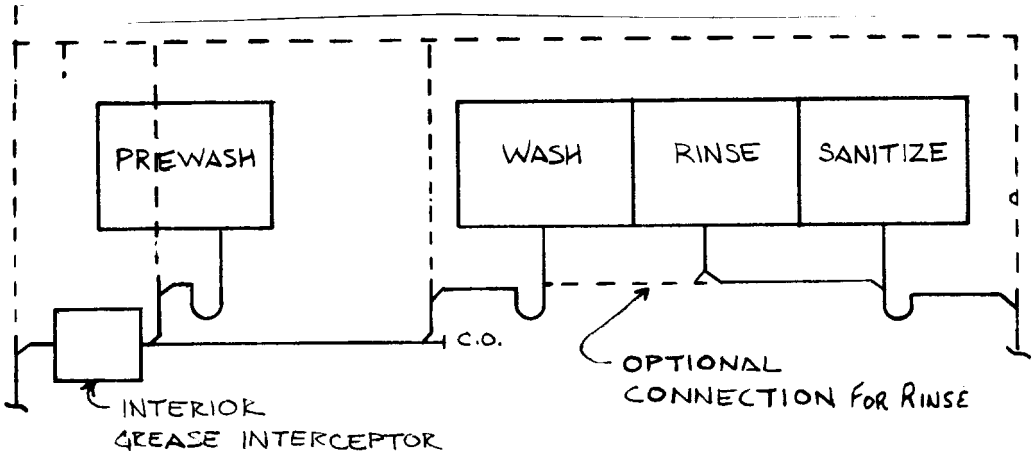


PREWASH AND 3 COMPARTMENT SCULLERY SINK

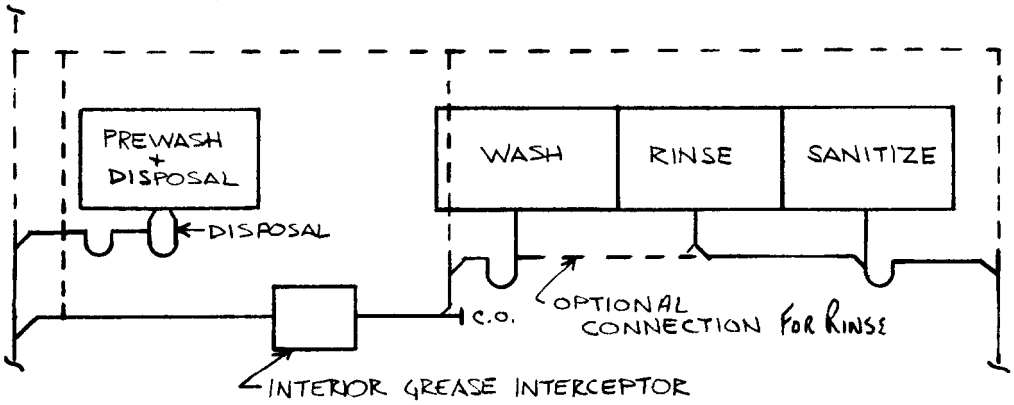


PREWASH + DISPOSAL + 3 COMPARTMENT SCULLERY SINK

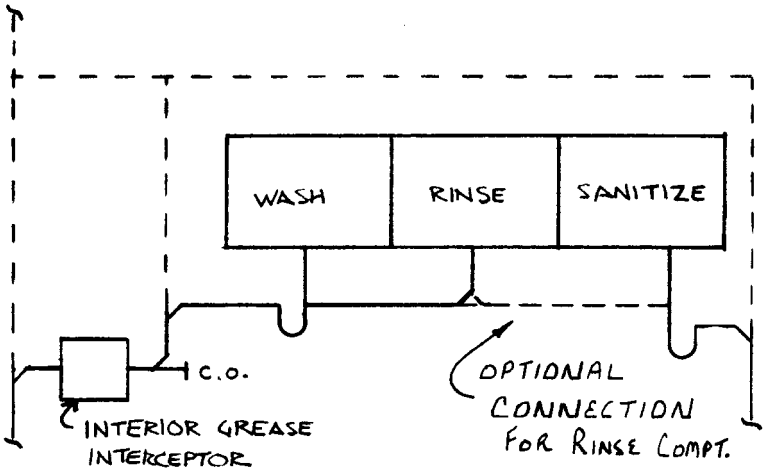


3 COMPARTMENT SCULLERY SINK

**Note:** Rinse and sanitize compartments and garbage disposals may discharge through interior grease interceptors.

Removed by Register November 2004 No. 587. For current adm. code see: http://docs.legis.wisconsin.gov/code/admin_code.



**A–82.34 (6)** AUTOMATIC CAR WASHES.

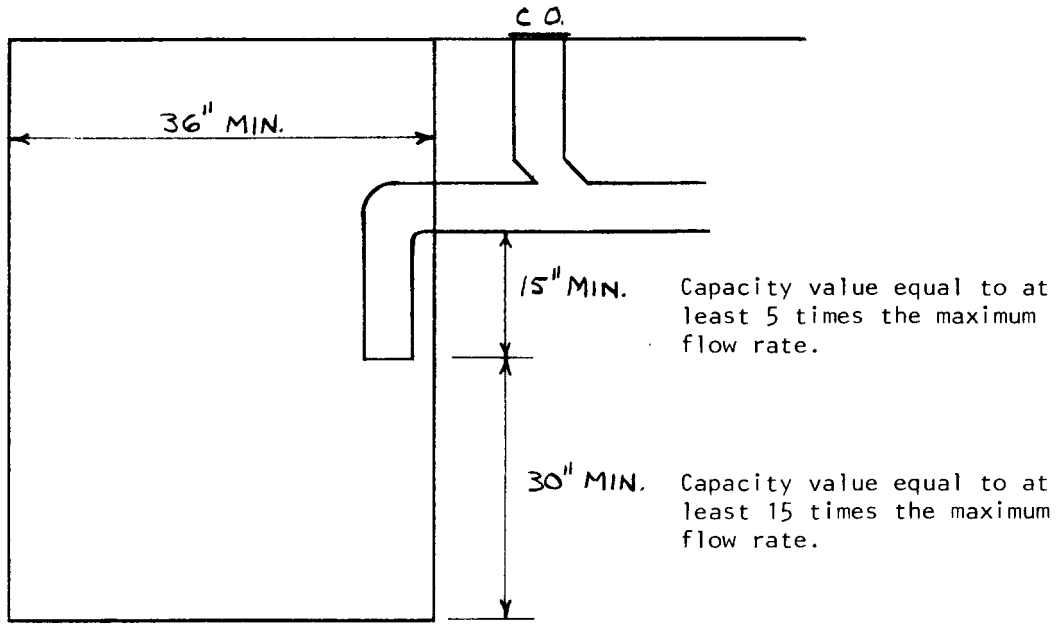


CAR WASH INTERCEPTOR WITH INVERT INSIDE OF BASIN

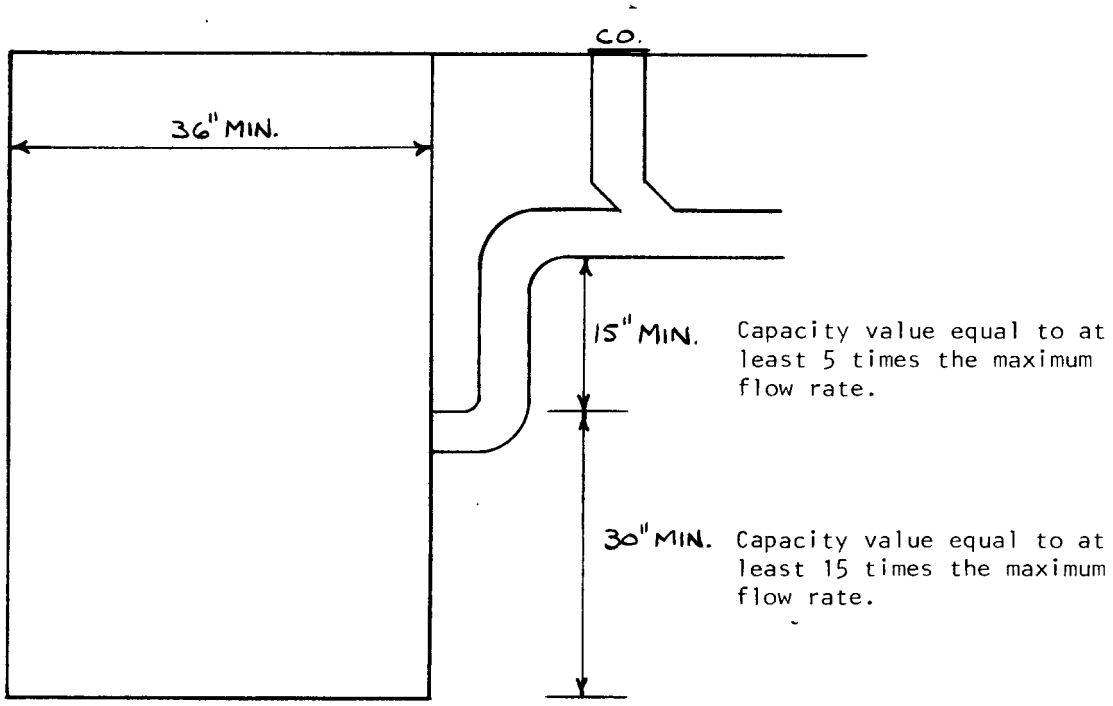


CAR WASH INTERCEPTOR WITH INVERT OUTSIDE OF BASIN

Removed by Register November 2004 No. 587. For current adm. code see: http://docs.legis.wisconsin.gov/code/admin_code.



**A–82.34 (7)** COMMERCIAL LAUNDRIES.

TRENCH TYPE LAUNDRY INTERCEPTOR

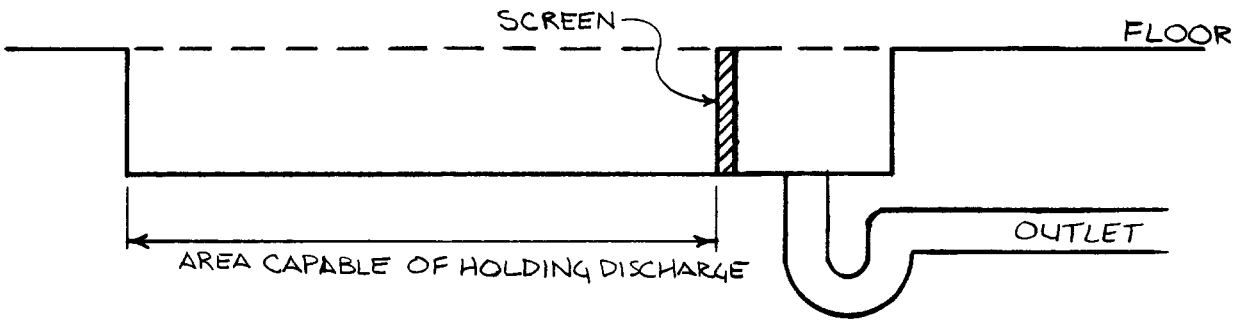


IN-LINE LAUNDRY INTERCEPTOR

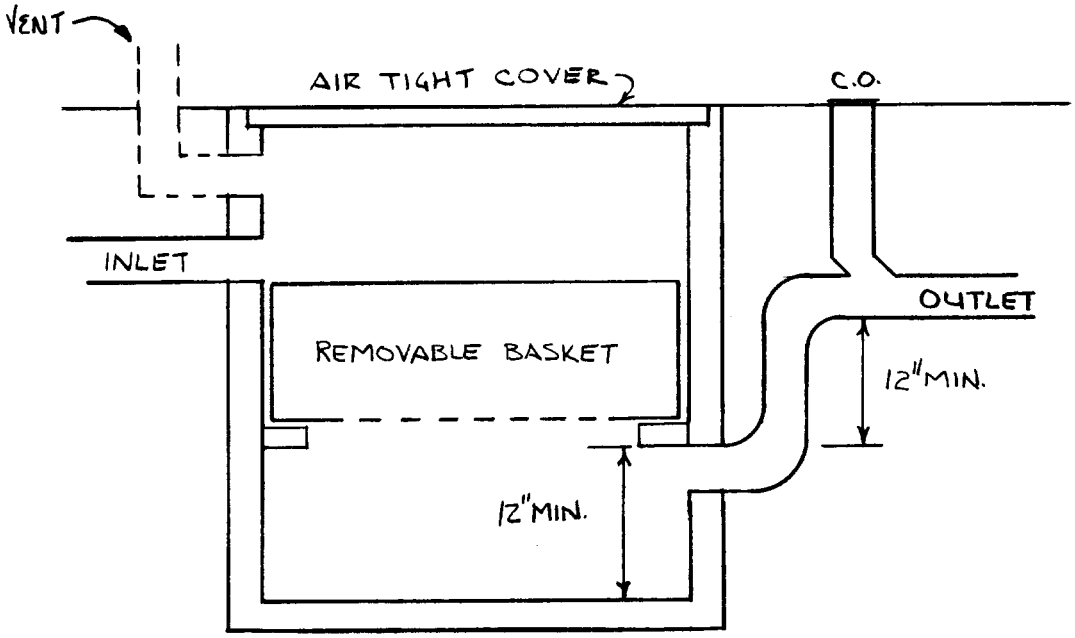

Removed by Register November 2004 No. 587. For current adm. code see: http://docs.legis.wisconsin.gov/code/admin_code.



**A–82.34 (8)** OIL AND FLAMMABLE LIQUIDS.

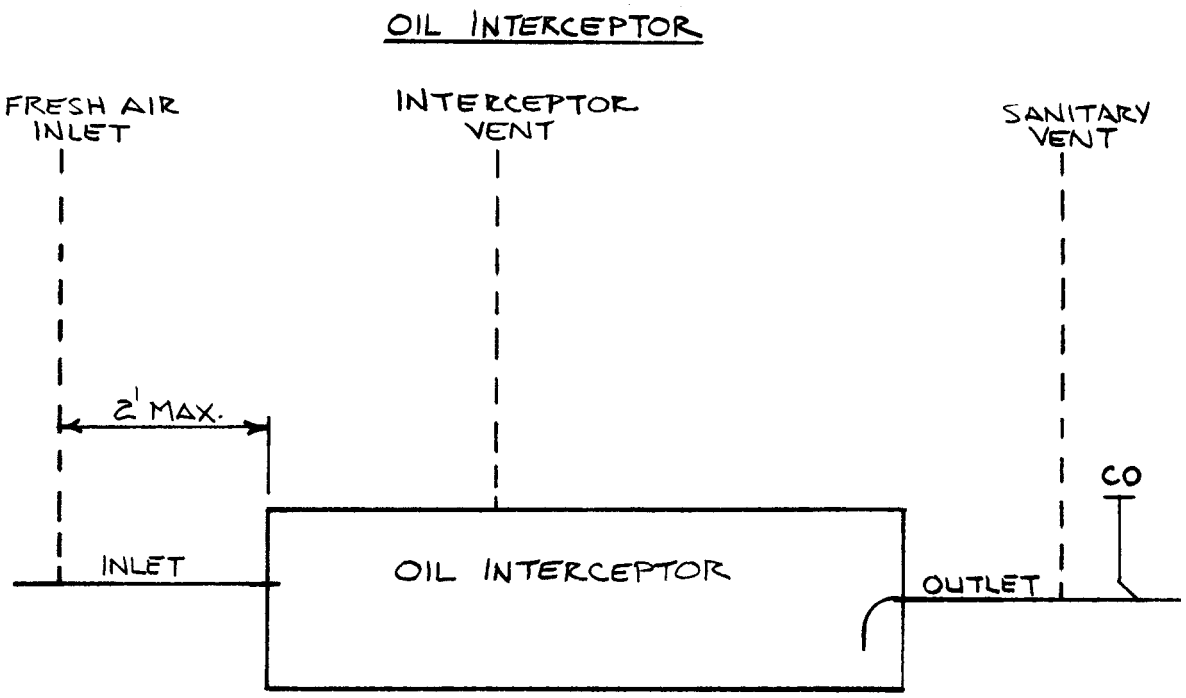


**A–82.34 (13)** PLASTER AND HEAVY SOLIDS TRAP TYPE INTERCEPTORS.

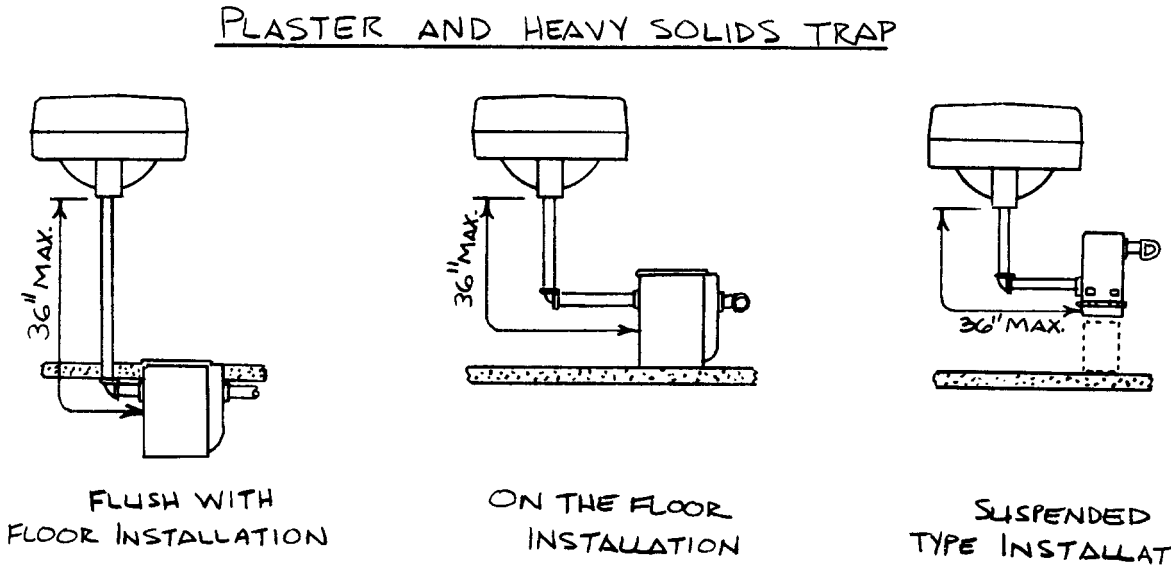

Removed by Register November 2004 No. 587. For current adm. code see: http://docs.legis.wisconsin.gov/code/admin_code.



**A–82.34 (14)** CHEMICAL DILUTION AND NEUTRALIZING BASINS.

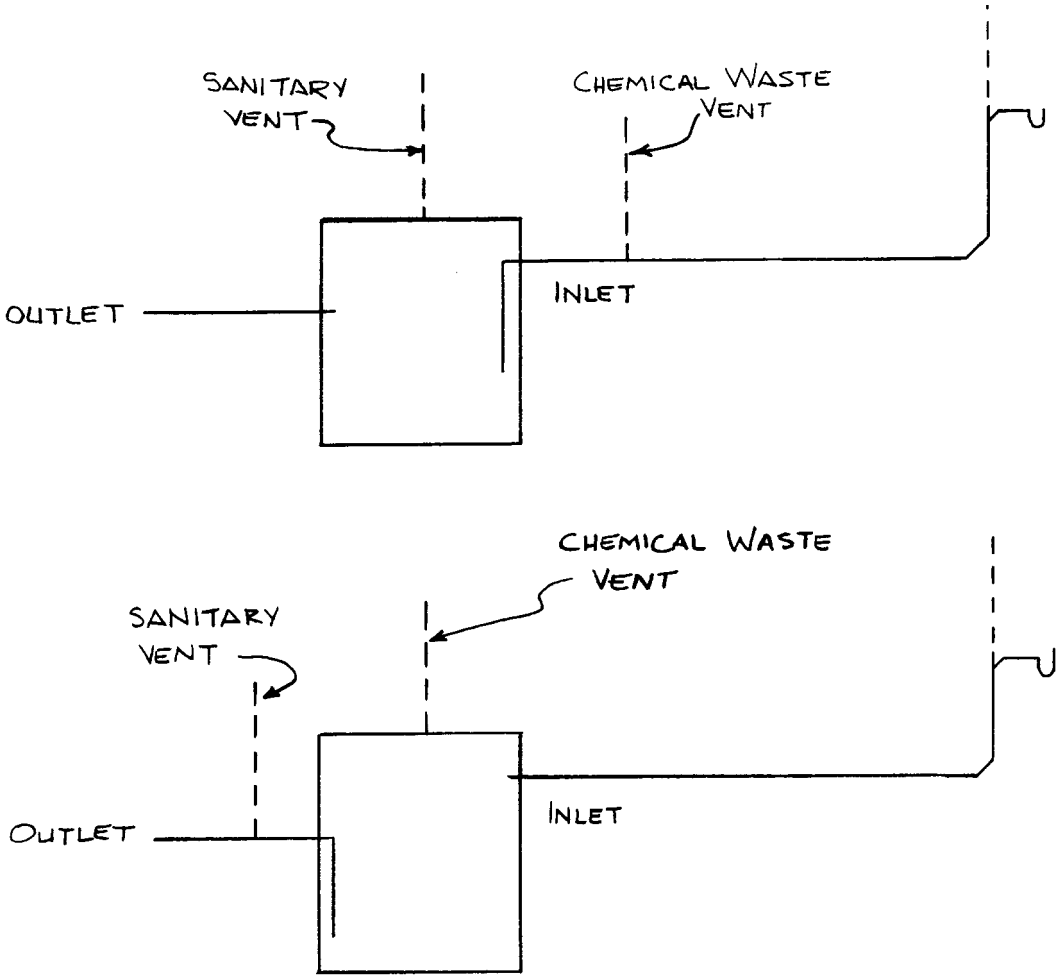


**A–82.35 (3)** CLEANOUTS SERVING HORIZONTAL DRAINS WITHIN OR UNDER A BUILDING.

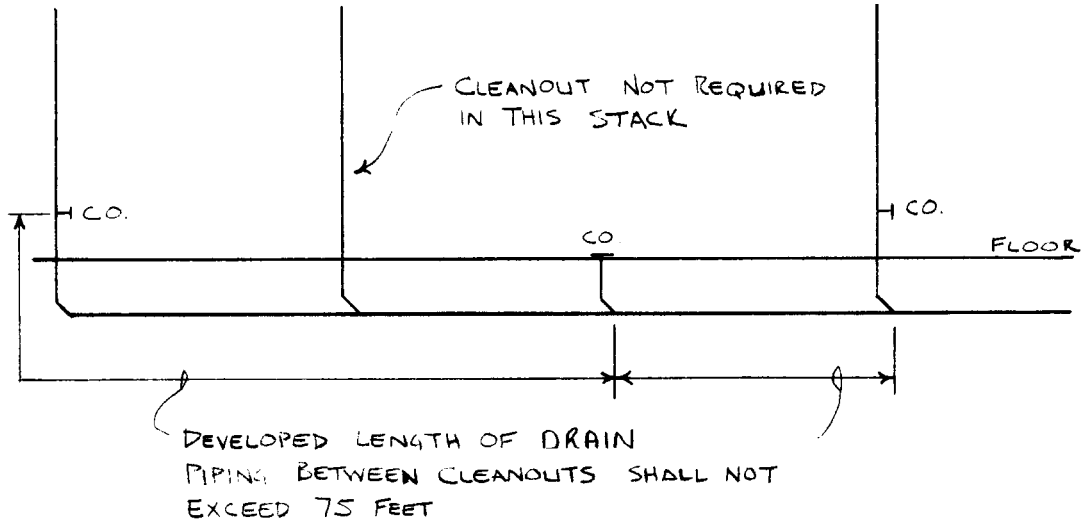

Removed by Register November 2004 No. 587. For current adm. code see: http://docs.legis.wisconsin.gov/code/admin_code.



**A–82.35 (3)** CLEANOUTS SERVING HORIZONTAL DRAINS.

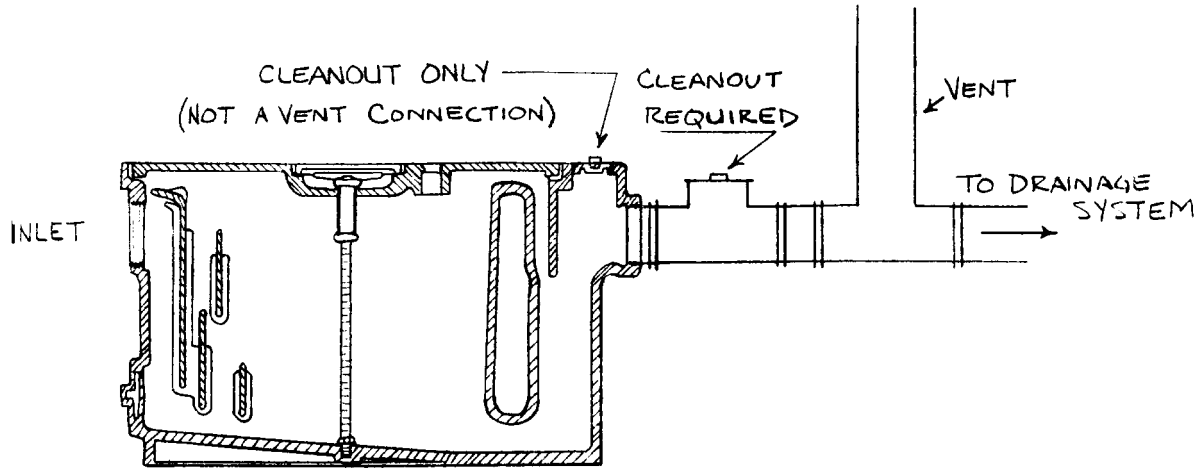


GREASE INTERCEPTOR

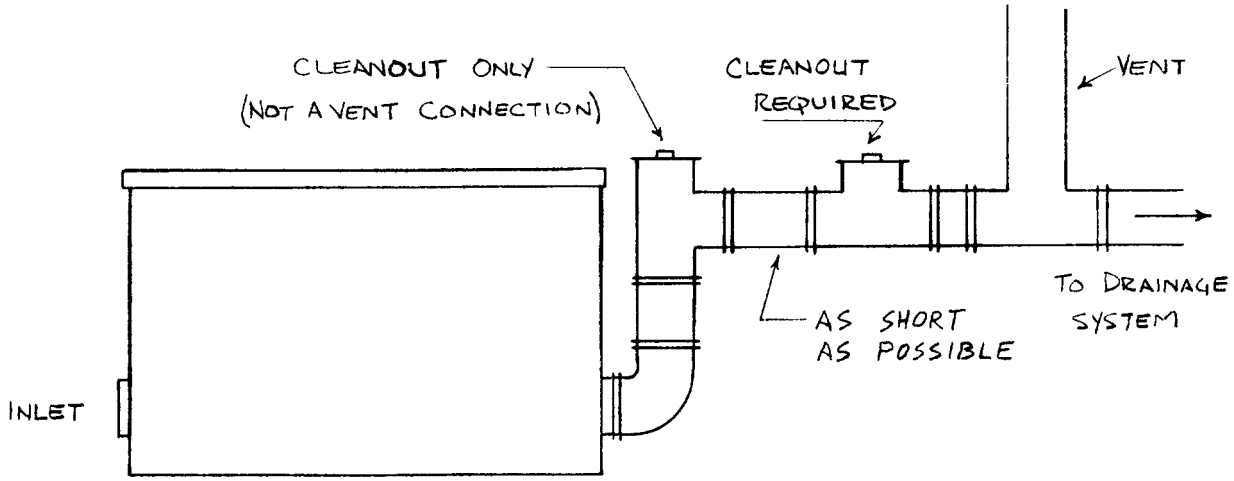


GREASE INTERCEPTOR

Removed by Register November 2004 No. 587. For current adm. code see: http://docs.legis.wisconsin.gov/code/admin_code.



**A–82.35 (5) (a)** CLEANOUT EXTENSION TO GRADE.

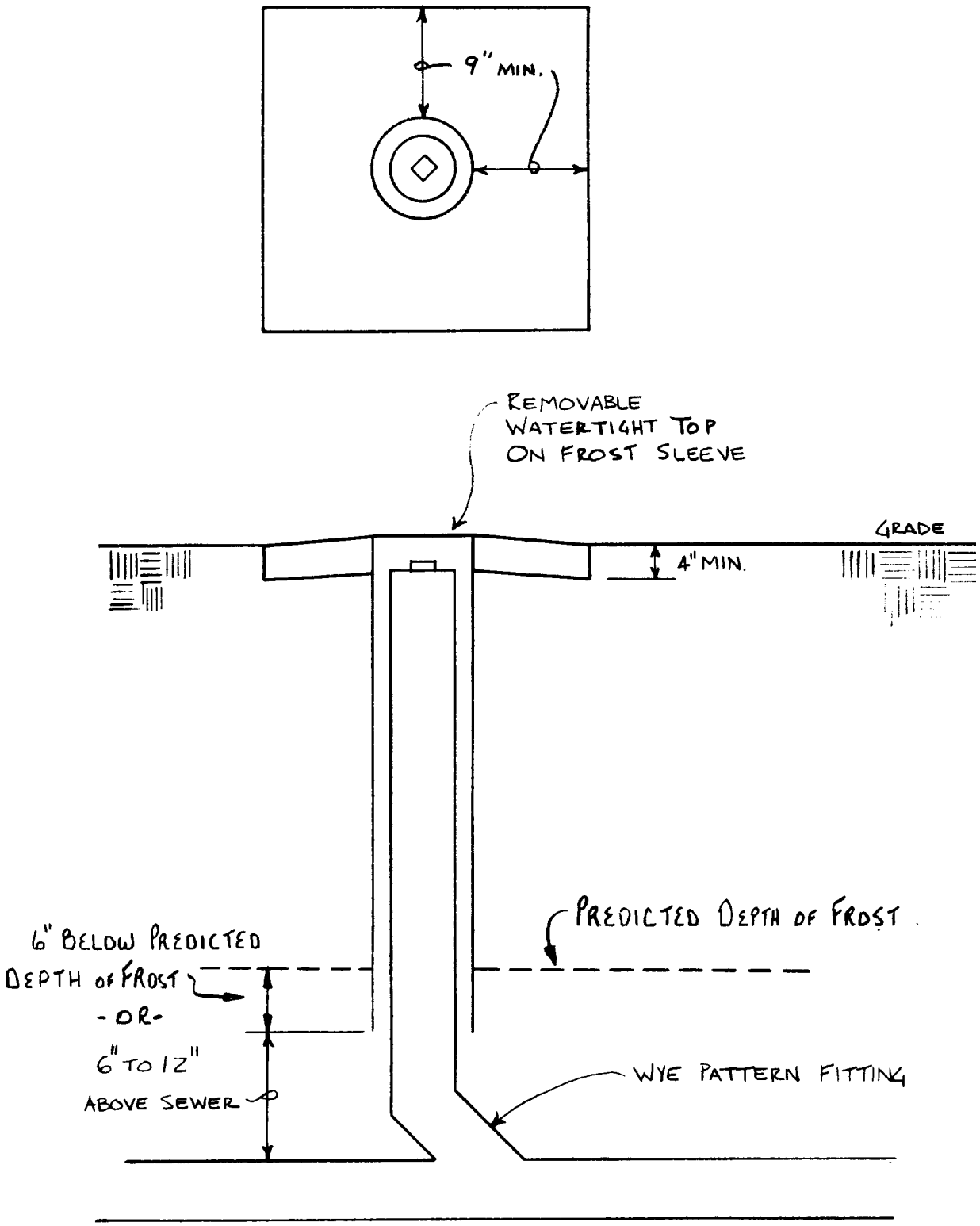

Removed by Register November 2004 No. 587. For current adm. code see: http://docs.legis.wisconsin.gov/code/admin_code.



**A–82.35 (8)** MANHOLES.

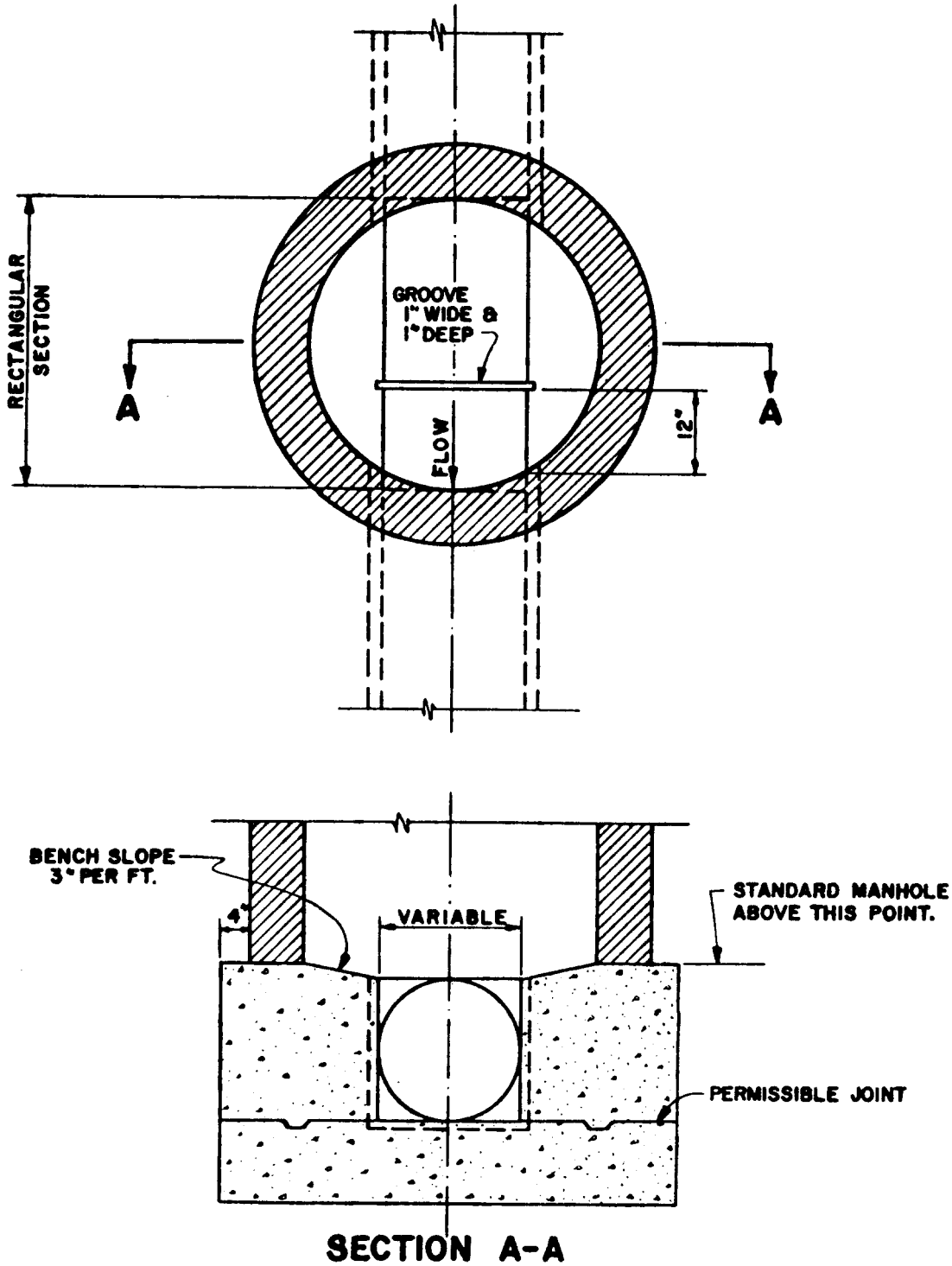


**DETAIL OF SAMPLING MANHOLE**

Removed by Register November 2004 No. 587. For current adm. code see: http://docs.legis.wisconsin.gov/code/admin_code.



**A–82.35 (8)** MANHOLES.

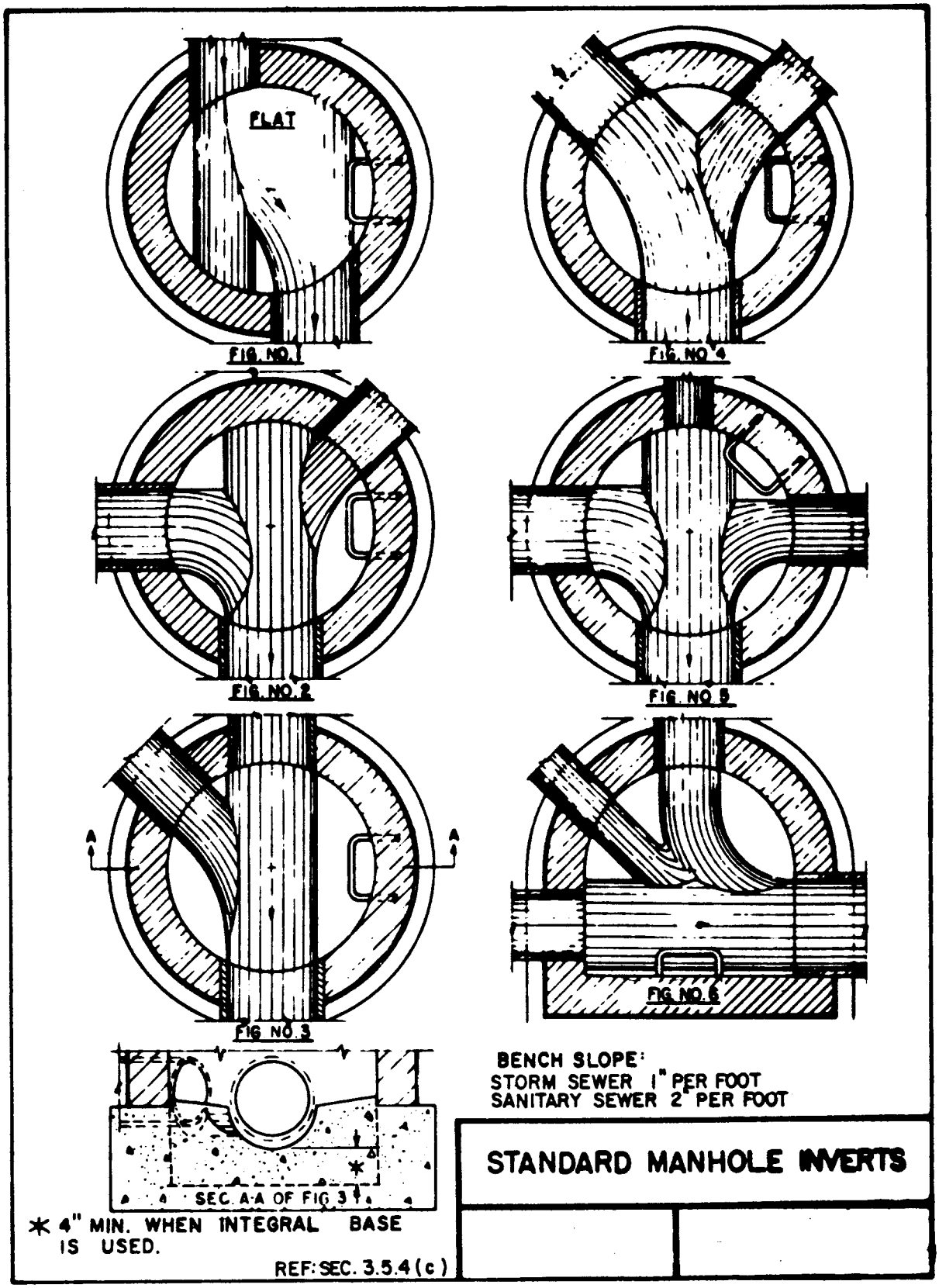

Removed by Register November 2004 No. 587. For current adm. code see: http://docs.legis.wisconsin.gov/code/admin_code.



**A–82.35 (8)** MANHOLES.

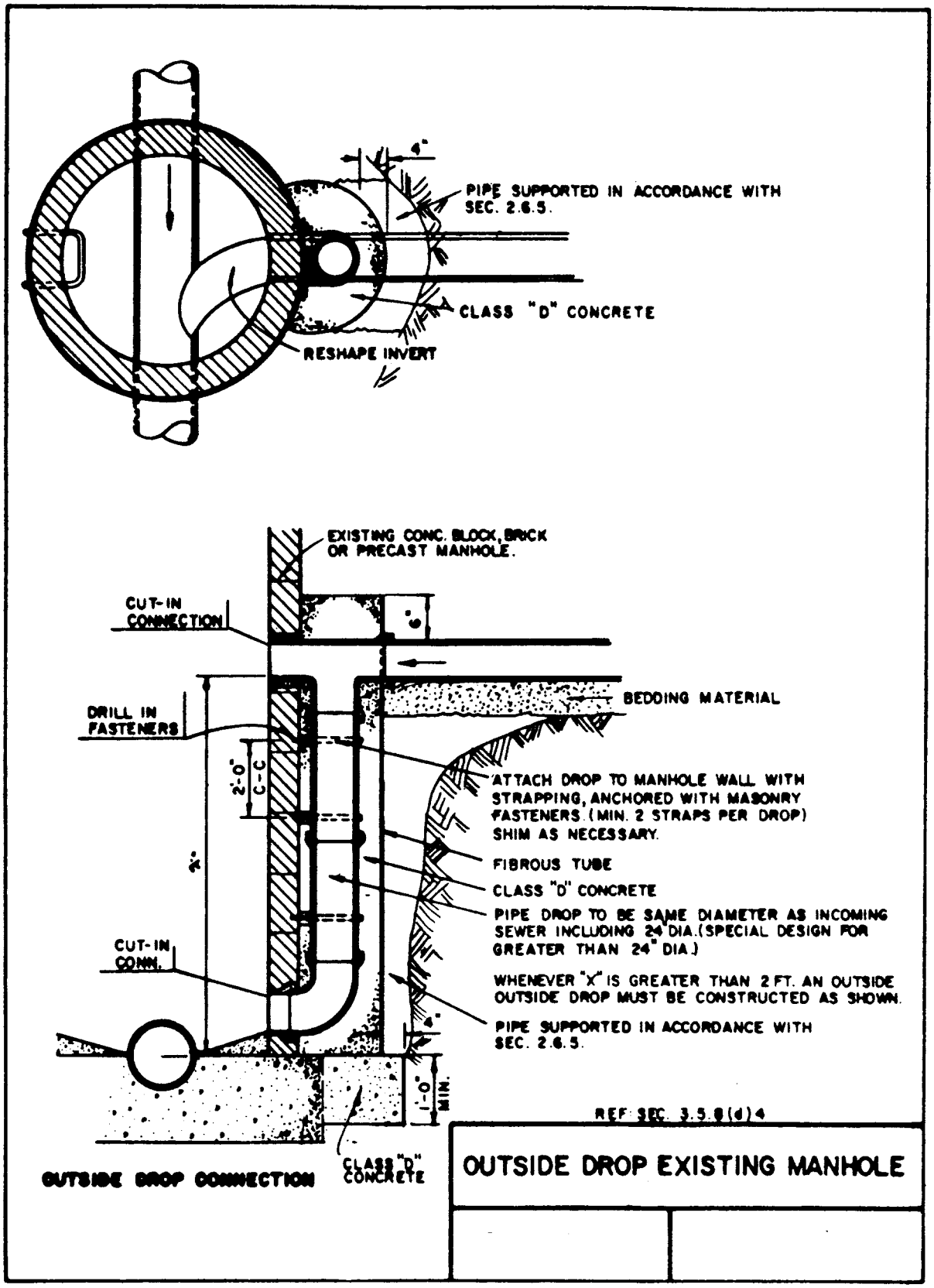

Removed by Register November 2004 No. 587. For current adm. code see: http://docs.legis.wisconsin.gov/code/admin_code.



**A−82.36 (17)** AREA DRAIN INLETS.

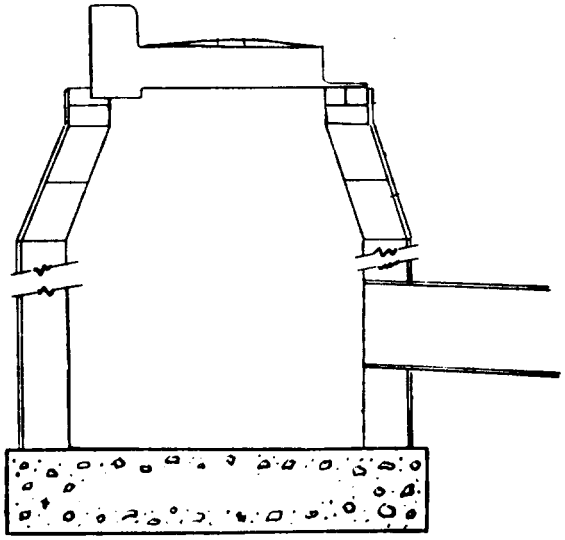

STANDARD STORM WATER CATCH BASIN (MASONRY)

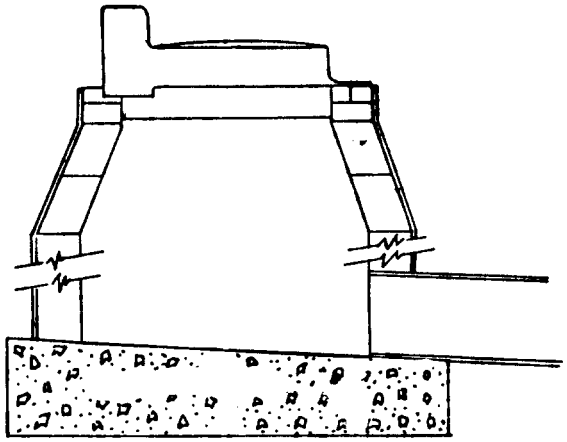

STANDARD STORM WATER INLET (MASONRY)

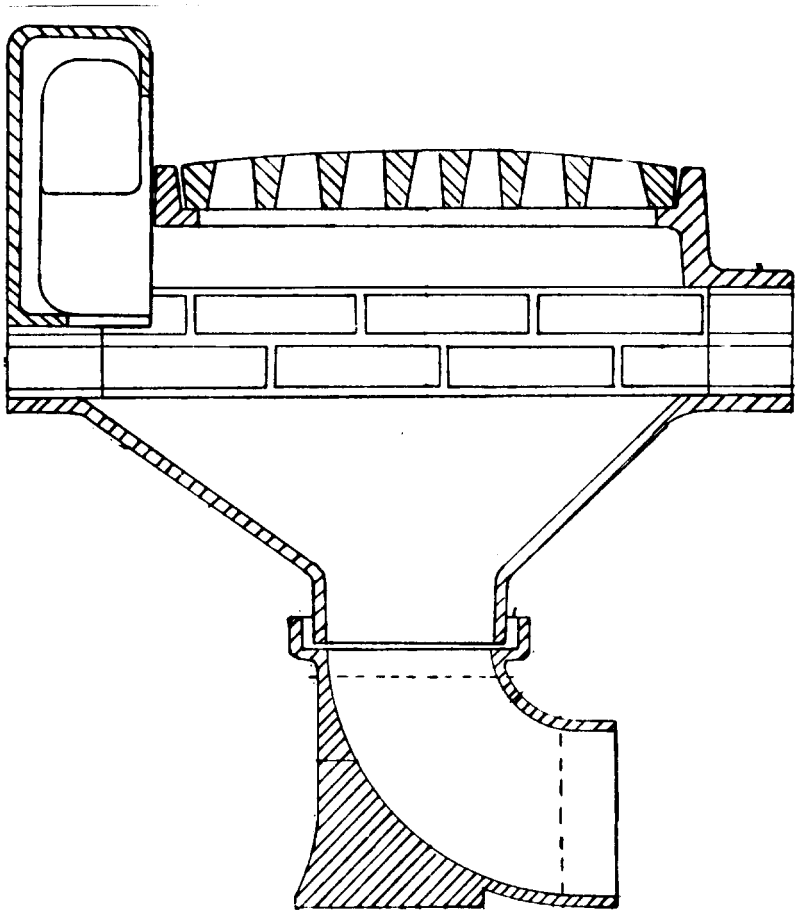

CAST IRON STORM WATER INLET

Removed by Register November 2004 No. 587. For current adm. code see: http://docs.legis.wisconsin.gov/code/admin_code.



**A–82.37 (2)** CONCRETE PADS FOR DUMPSTATIONS.

**A–82.40 (4)** CONTROL VALVES.

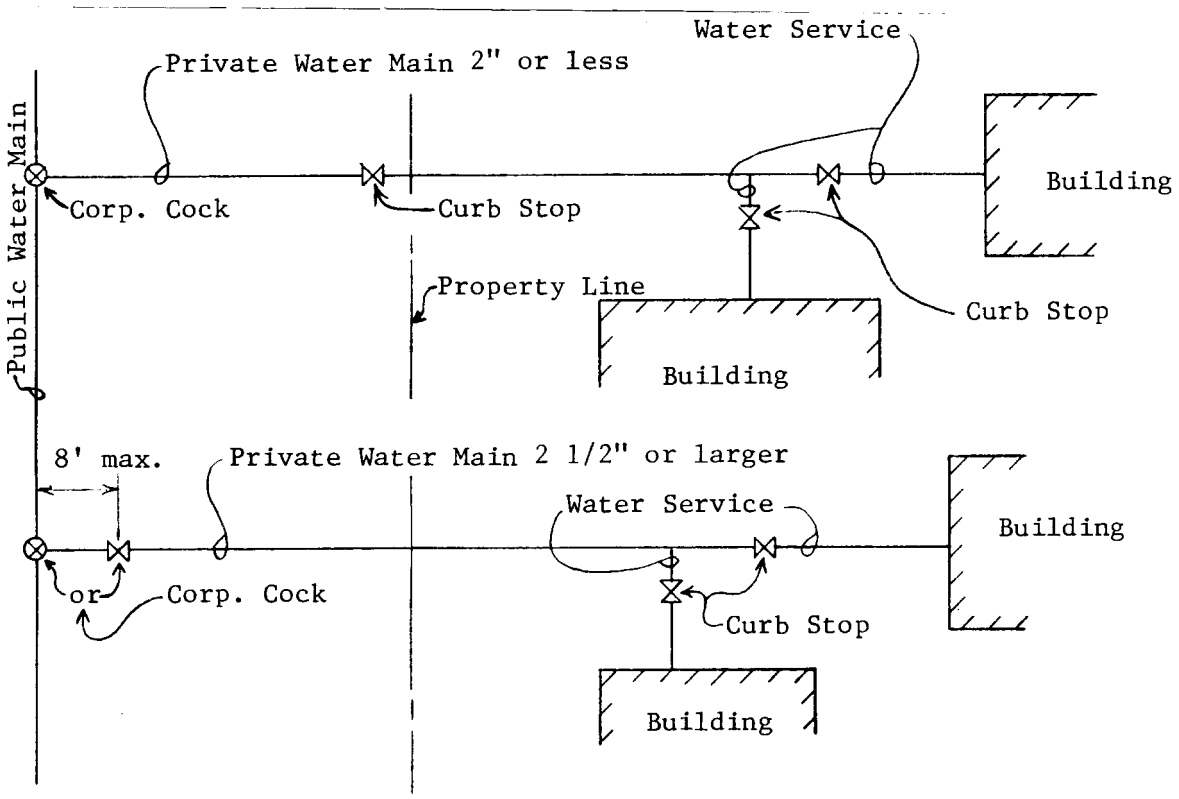

Removed by Register November 2004 No. 587. For current adm. code see: http://docs.legis.wisconsin.gov/code/admin_code.



**A–82.40 (4) (b)** WATER SERVICES.

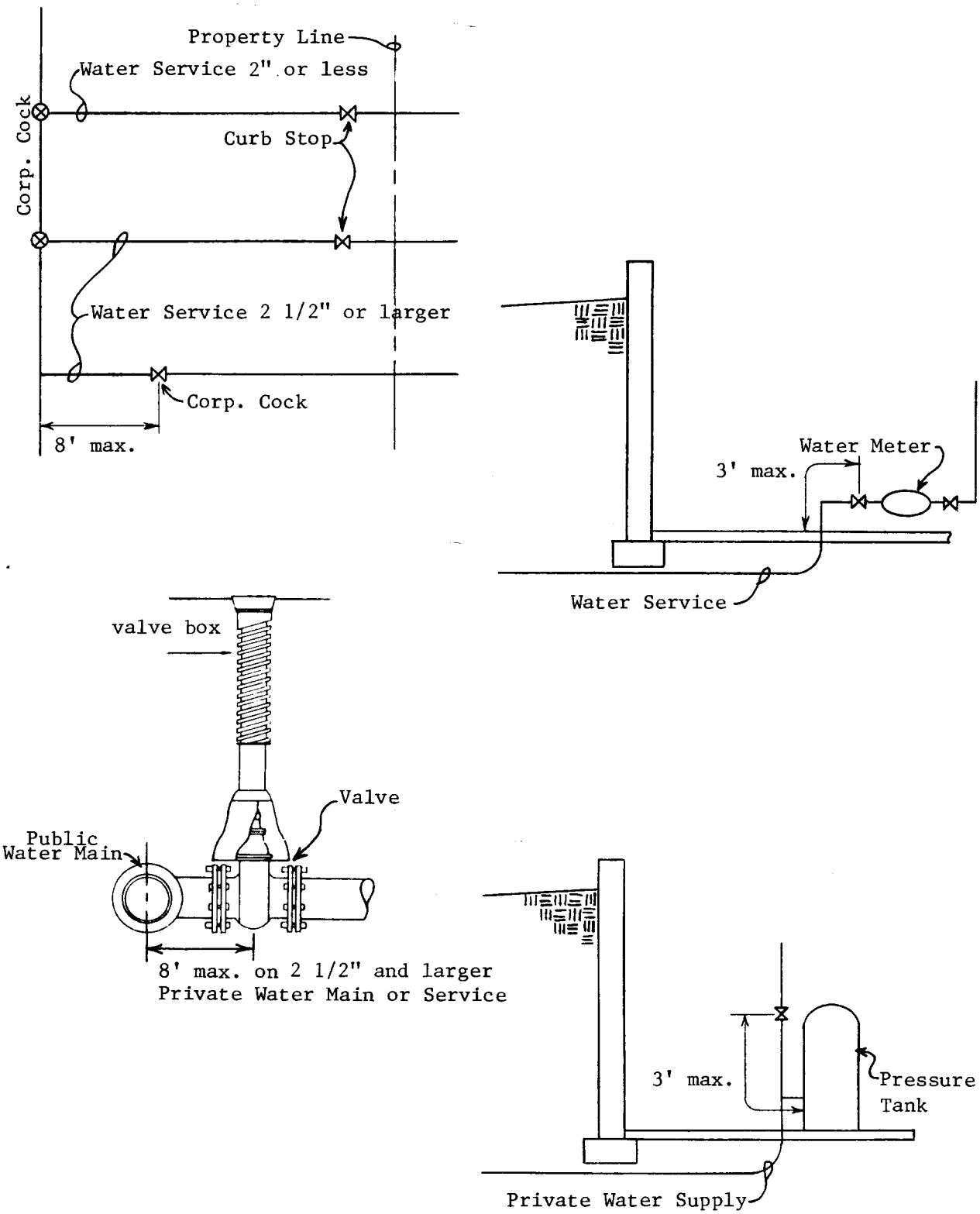

Removed by Register November 2004 No. 587. For current adm. code see: http://docs.legis.wisconsin.gov/code/admin_code.



**A−82.40 (5) PIPING INSULATION.** The following is a reprint of s. Comm 63.1029 (1) and (2) and Table 63.1029.

**Comm 63.1029 Insulation, materials and construction.** (1) GENERAL. Insulation required by subs. (2) and (3) shall be suitably protected from damage. Insulation shall be installed in accordance with practices acceptable to the department. The department accepts MICA Commercial and Industrial Insulation Standards as an insulation installation practice.

**(2)** PIPING INSULATION. Except as provided in pars. (a) to (c), recirculating plumbing system piping, plumbing piping in the first 8 feet from storage tanks for noncirculating systems, any piping served by a self–regulating electric heating cable, HVAC system piping, and related HVAC fluid conveying conduit, such as heat exchanger bodies, shall be thermally insulated in accordance with Table 63.1029 or equivalent. The following piping or conduit is exempted from this subsection:

(a) Factory–installed piping or conduit within HVAC equipment tested and rated in accordance with s. Comm 63.1020;

(b) Piping or conduit for which no insulation is specified in Table 63.1029.

(c) Where it can be shown that the heat gain or heat loss to or from piping or conduit without insulation will not increase building energy use.

**Table 63.1029**
**Plumbing and HVAC Piping Minimum Insulation [in. [a] (R−value)]**

| | Insulation Conductivity[a] | | Nominal Pipe Diameter [in. (R−value)] | | | | | |
|---|---|---|---|---|---|---|---|---|
| Fluid Design Operating Temp. Range, ºF | Conductivity Range Btu in./ (h ft$^2$ ºF) | Mean Rating Temp. ºF | Runouts[b] up to 2 | 1 and less | 1−1/4 to 2 | 2−1/2 to 4 | 5 & 6 | 8 & up |
| **Heating systems (Steam, Steam Condensate, and Hot Water)** | | | | | | | | |
| Above 350 | 0.32−0.34 | 250 | 1.5(R−4.4) | 1.5(R−4.4) | 2.5(R−7.4) | 3.0(R−8.8) | 3.5(R−10.3) | 3.5(R−10.3) |
| 251−350 | 0.29−0.31 | 200 | 1.5(R−4.8) | 1.5(R−4.8) | 2.5(R−8.1) | 2.5(R−8.1) | 3.5(R−11.3) | 3.5(R−11.3) |
| 201−250 | 0.27−0.30 | 150 | 1.0(R−3.3) | 1.0(R−3.3) | 1.5(R−5.0) | 2.0(R−6.7) | 2.0(R−6.7) | 3.5(R−11.7) |
| 141−200 | 0.25−0.29 | 125 | 0.5(R−1.8) | 0.5(R−1.8) | 1.5(R−5.2) | 1.5(R−5.2) | 1.5(R−5.2) | 1.5(R−5.2) |
| 105−140 | 0.24−0.28 | 100 | 0.5(R−1.8) | 0.5(R−1.8) | 1.0(R−3.6) | 1.0(R−3.6) | 1.0(R−3.6) | 1.5(R−5.4) |
| **Domestic and Service Hot Water systems[c]** | | | | | | | | |
| 105 and greater | 0.24−0.28 | 100 | 0.5(R−1.8) | 1.0(R−3.6) | 1.0(R−3.6) | 1.5(R−5.4) | 1.5(R−5.4) | 1.5(R−5.4) |
| **Cooling systems (Chilled water, brine, and refrigerant)[d]** | | | | | | | | |
| 40−55 | 0.23−0.27 | 75 | 0.5(R−1.9) | 0.5(R−1.9) | 0.75(R−2.8) | 1.0(R−3.7) | 1.0(R−3.7) | 1.0(R−3.7) |
| Below 40 | 0.23−0.27 | 75 | 1.0(R−3.7) | 1.0(R−3.7) | 1.5(R−5.6) | 1.5(R−5.6) | 1.5(R−5.6) | 1.5(R−5.6) |

[a] For insulation outside the state conductivity range, the minimum thickness (T) shall be determined as follows: $T=PR\ [(1+t/PR)^{K/k}-1]$, where T = minimum insulation thickness for material with conductivity K, in.; PR = actual outside radius of pipe, in.; t = insulation thickness, in.; K = conductivity of alternate material at mean rating temperature indicated for the applicable fluid temperature; and k = the lower value of the conductivity range listed for the applicable fluid temperature.

[b] Runouts to individual terminal units not exceeding 12 ft. in length.

[c] Applies to recirculating sections of service or domestic hot water systems and first 8 ft. from storage tank for nonrecirculating systems.

[d] The required minimum thickness does not consider water vapor transmission and condensation.

**A–82.40 (7) (a)** METHODOLOGY.

Where equipment such as an instantaneous or tankless water heater, water treatment device, water meter, and backflow preventer is provided in the design, the friction loss in such equipment, corresponding to the GPM demand, should be determined from the manufacturer or other reliable source.

Where a direct fired pressurized tank type water heater is provided in the design, the friction loss for such equipment can be assumed as part of the pressure losses due to flow through piping, fittings, valves and other plumbing appurtenances when the developed length of piping is multiplied by 1.5.

The pressure losses due to flow friction through displacement type cold−water meters may be calculated from Graph A−82.40 (7)−1.

Removed by Register November 2004 No. 587. For current adm. code see: http://docs.legis.wisconsin.gov/code/admin_code.



**Graph A-82.40 (7) - 1**

PRESSURE LOSS IN COLD-WATER METERS, DISPLACEMENT TYPE

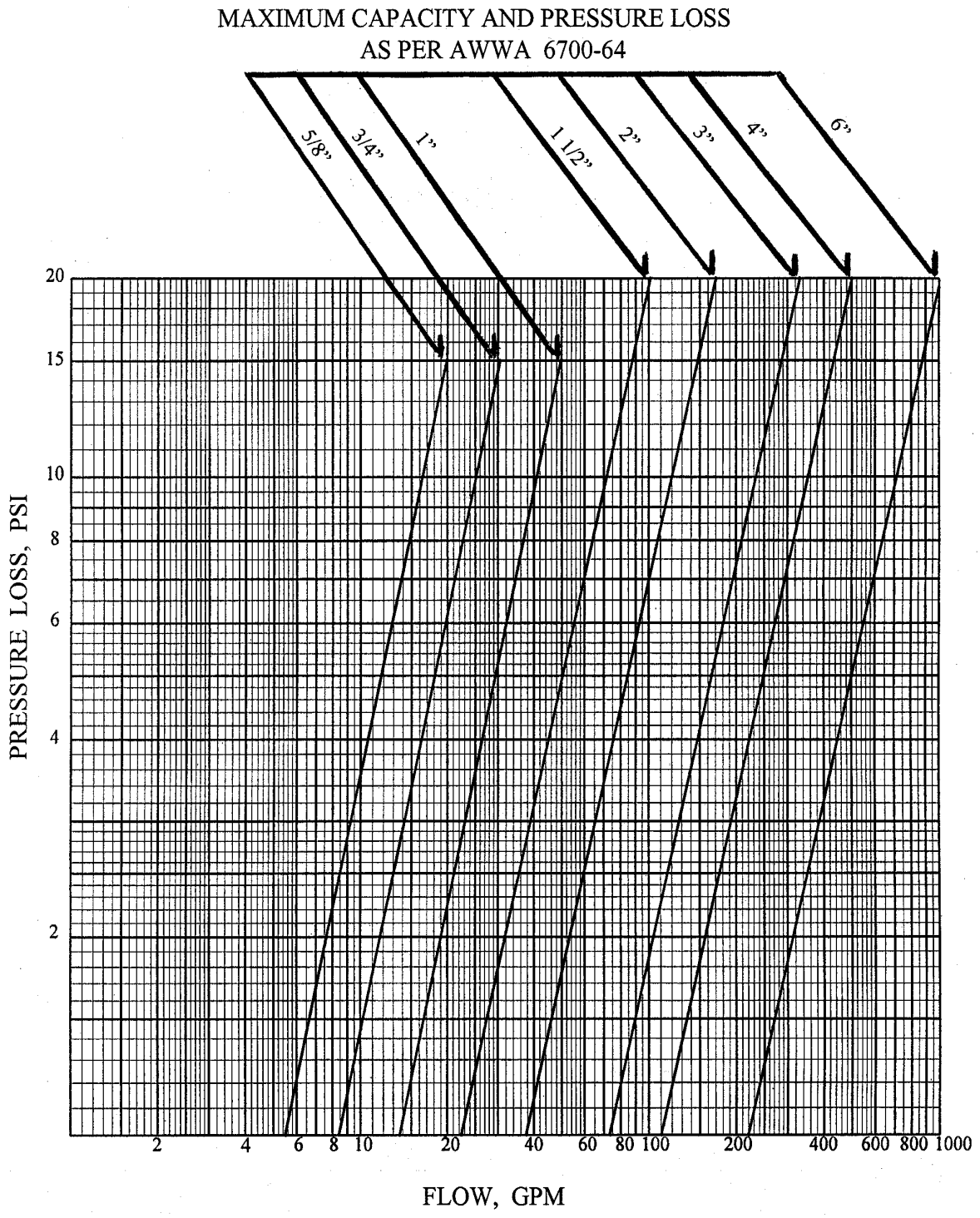

Removed by Register November 2004 No. 587. For current adm. code see: http://docs.legis.wisconsin.gov/code/admin_code.



**A−82.40 (7) (b)** PRIVATE WATER MAINS AND WATER SERVICES. Graphs A−82.40 (7)−1 to A−82.40 (7)−11 may be used to size private water mains and water services.

**Graph A−82.40 (7)−2**
Pressure losses due to flow friction
Material: Copper Tube−Type K, ASTM B88; (C = 150)

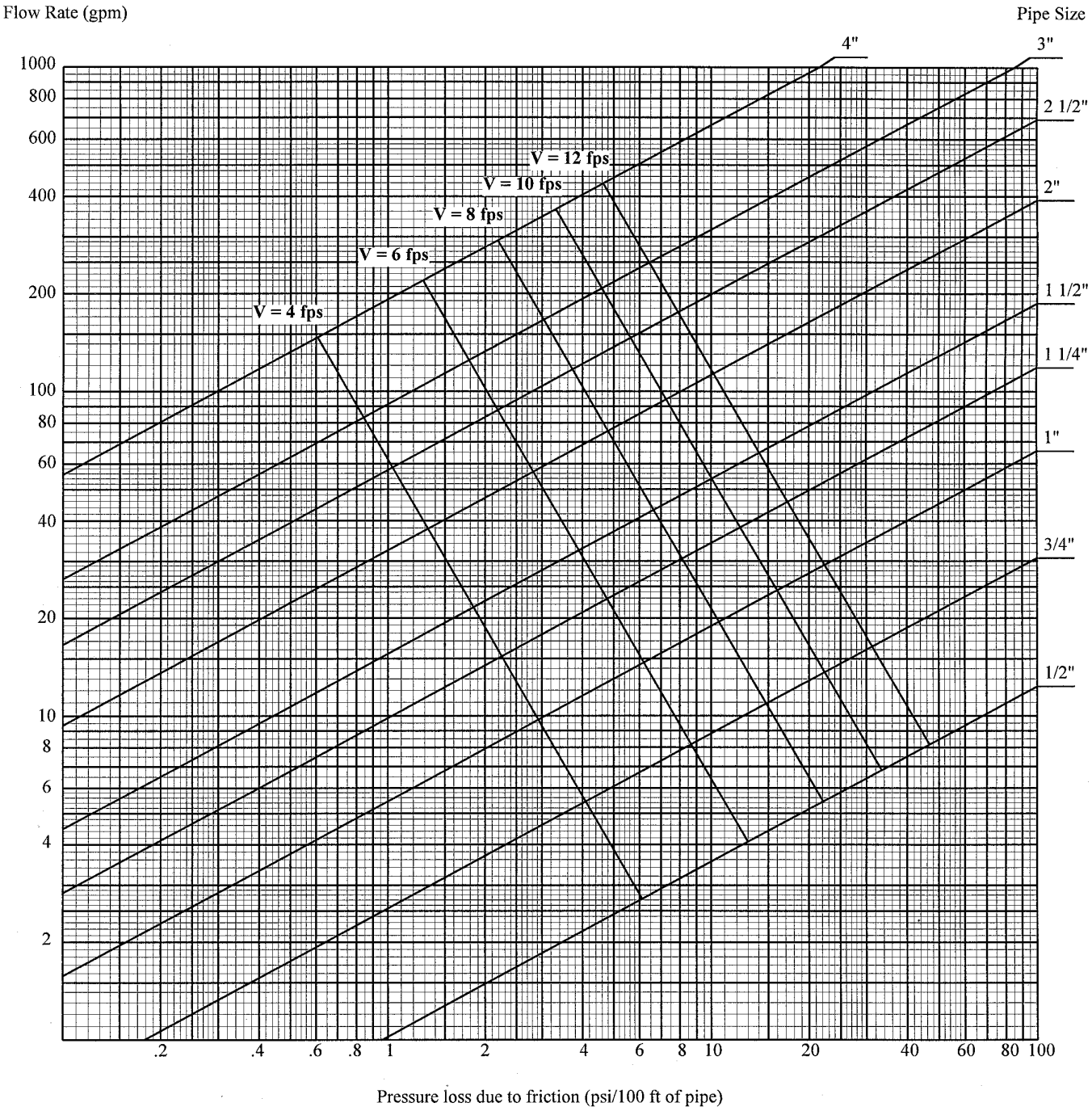

Removed by Register November 2004 No. 587. For current adm. code see: http://docs.legis.wisconsin.gov/code/admin_code.



**Graph A−82.40 (7)−3**
Pressure losses due to flow friction
Material: Copper Tube−Type L, ASTM B88; (C = 150)

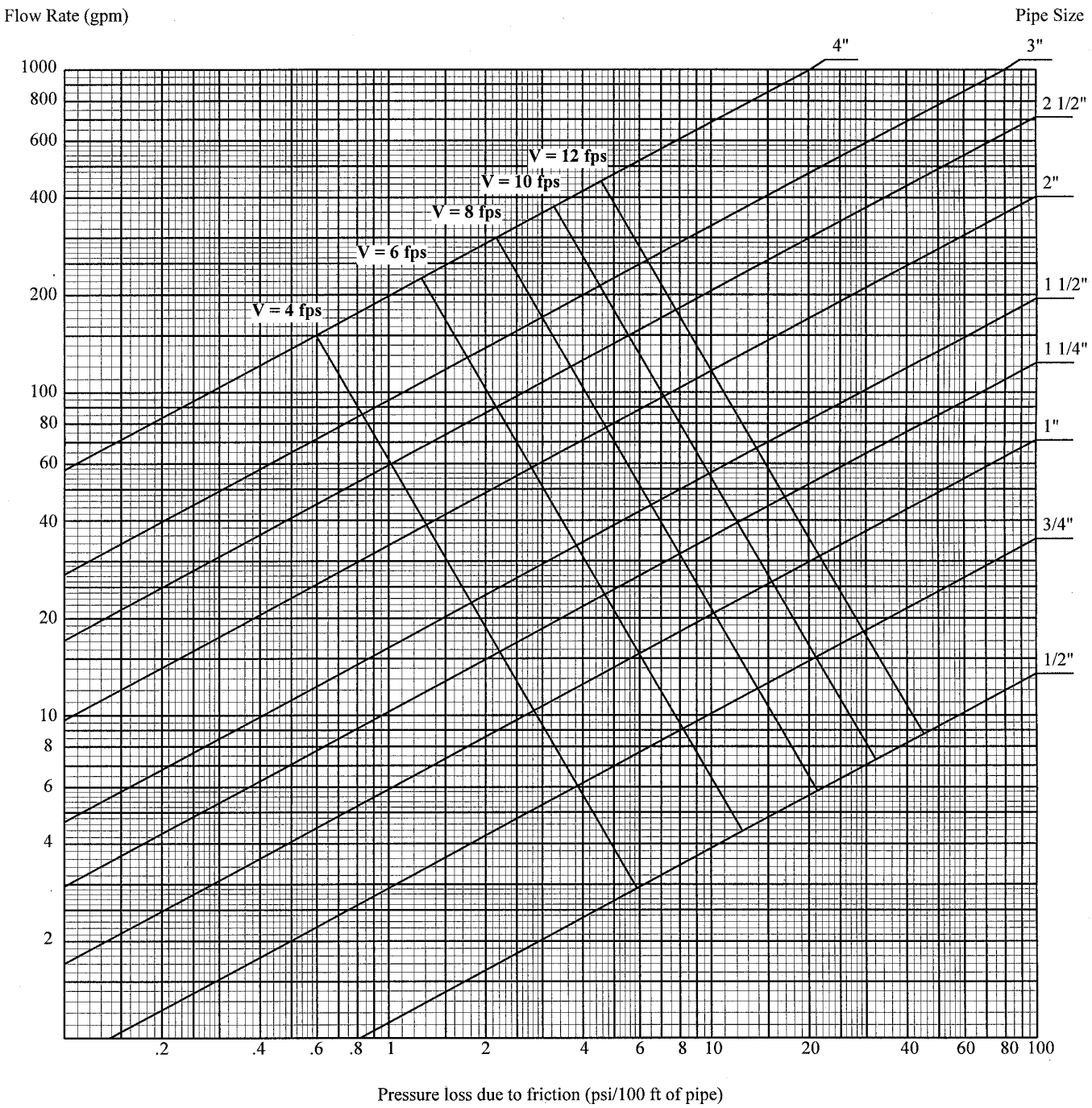

Removed by Register November 2004 No. 587. For current adm. code see: http://docs.legis.wisconsin.gov/code/admin_code.



**Graph A−82.40 (7)−4**
Pressure losses due to flow friction
Material: Galvanized Steel Pipe−Schedule 40, ASTM A53, ASTM A120; (C = 125)

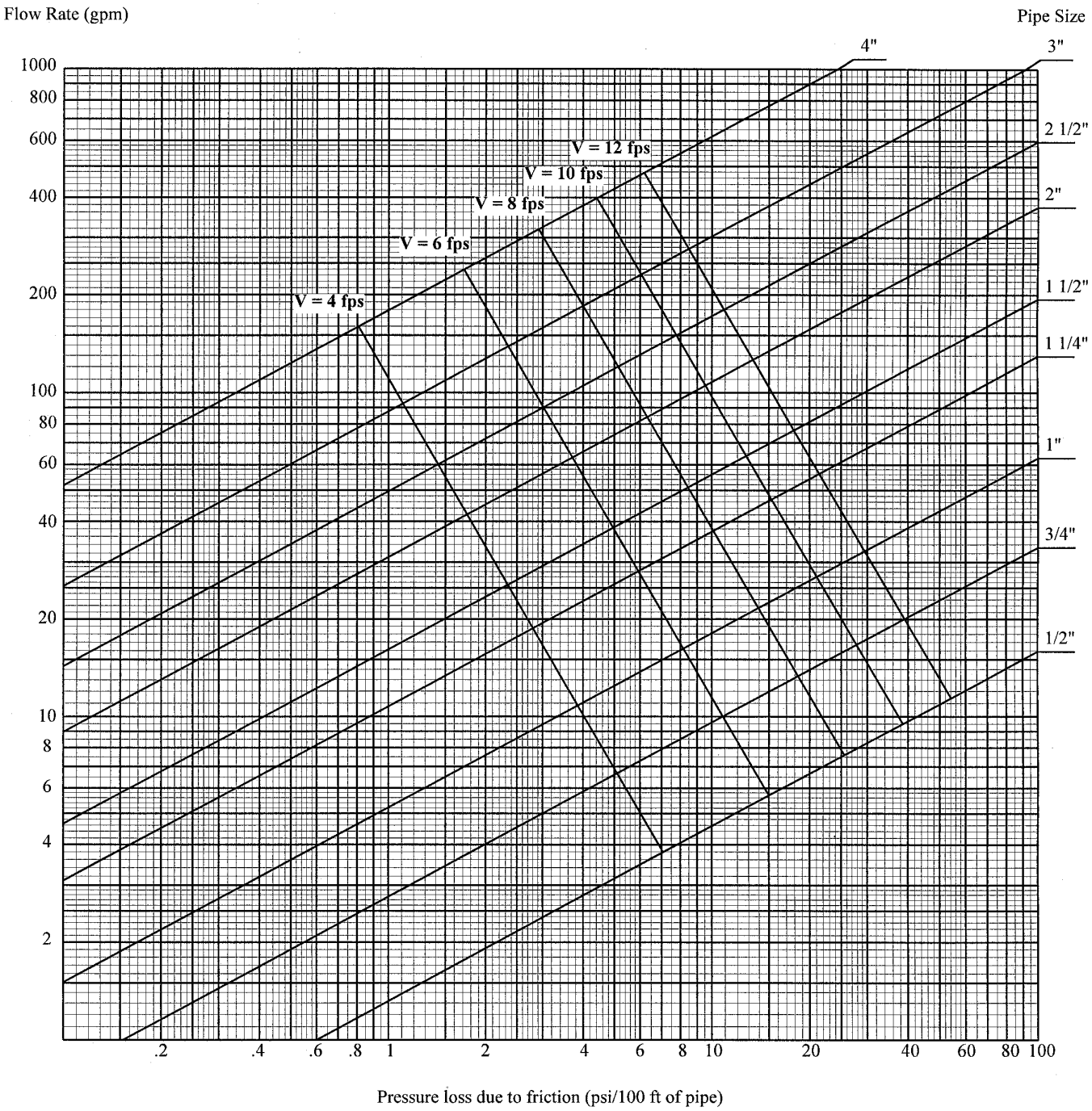

Removed by Register November 2004 No. 587. For current adm. code see: http://docs.legis.wisconsin.gov/code/admin_code.



**Graph A−82.40 (7)−5**
Pressure losses due to flow friction
Material: Polybutylene Tubing, ASTM D3309; or
CPVC Tubing, ASTM D2846; (C = 150)

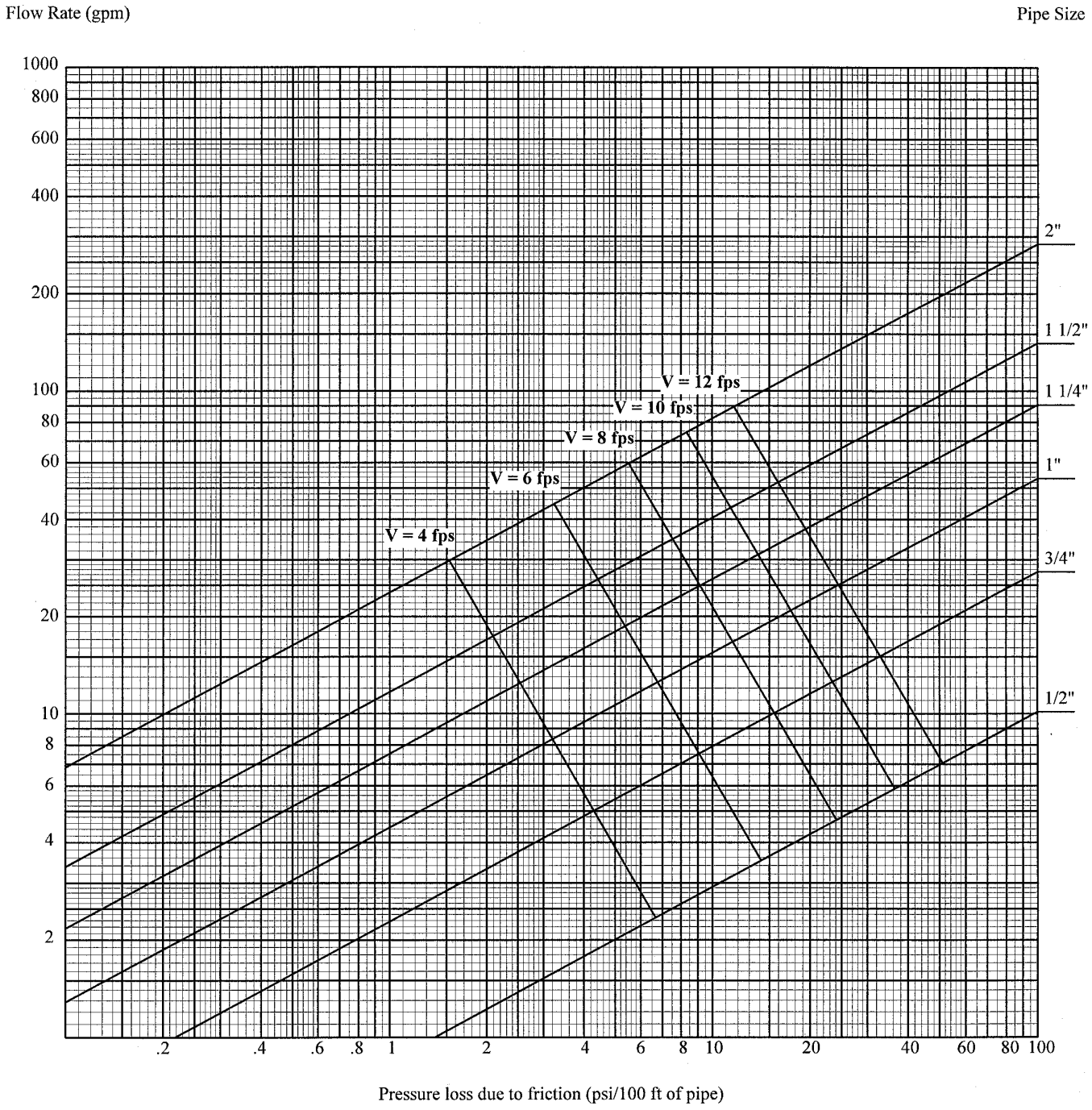

Removed by Register November 2004 No. 587. For current adm. code see: http://docs.legis.wisconsin.gov/code/admin_code.



**Graph A−82.40 (7)−6**
Pressure losses due to flow friction
Material: Crosslinked Polyethylene (PEX) Tubing, ASTM F876; (C = 150)

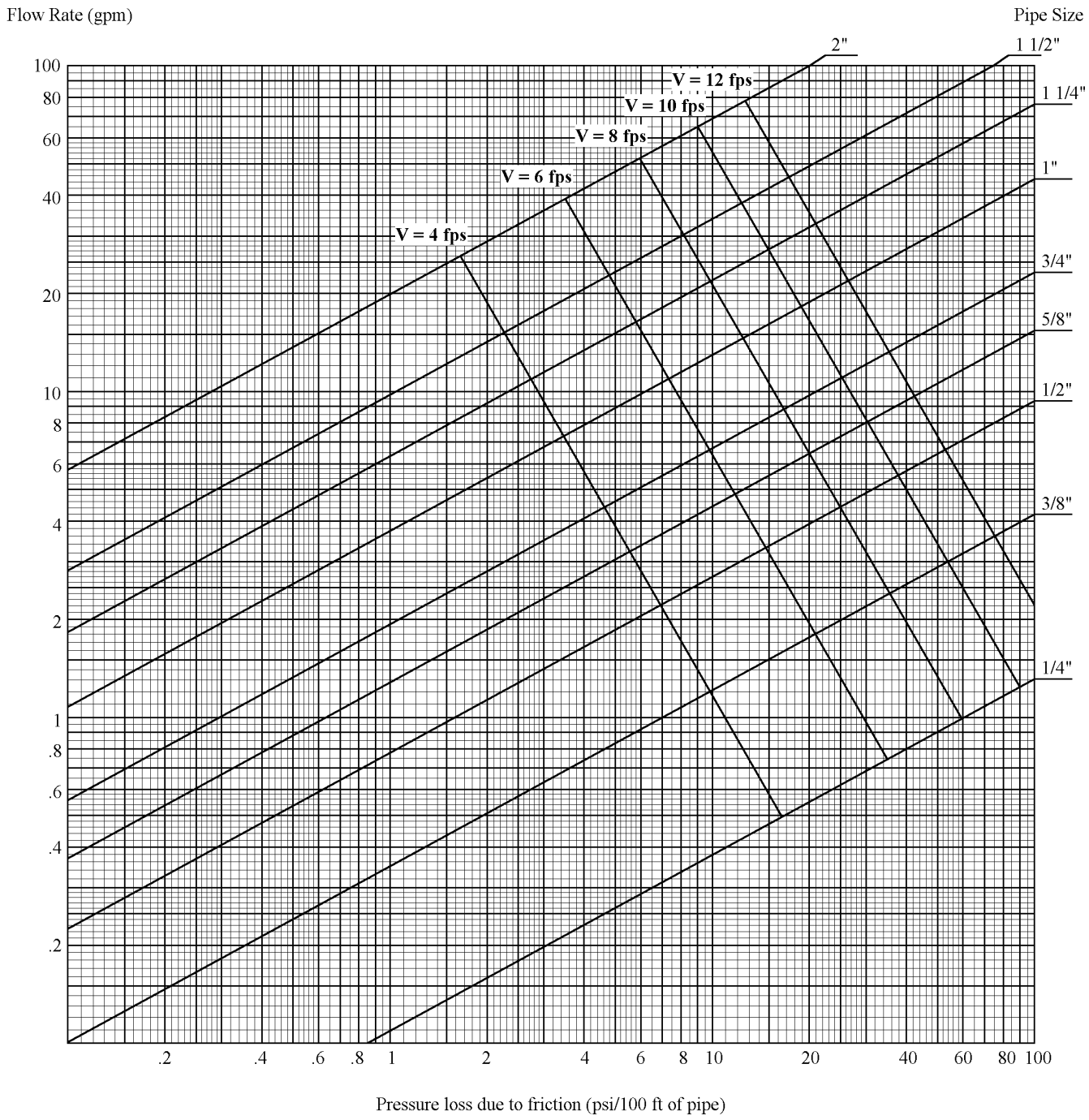

Removed by Register November 2004 No. 587. For current adm. code see: http://docs.legis.wisconsin.gov/code/admin_code.



**Graph A−82.40 (7)−7**
Pressure losses due to flow friction
Material: Polyethylene Tubing, Copper Tube Size, ASTM D2737; (C = 150)

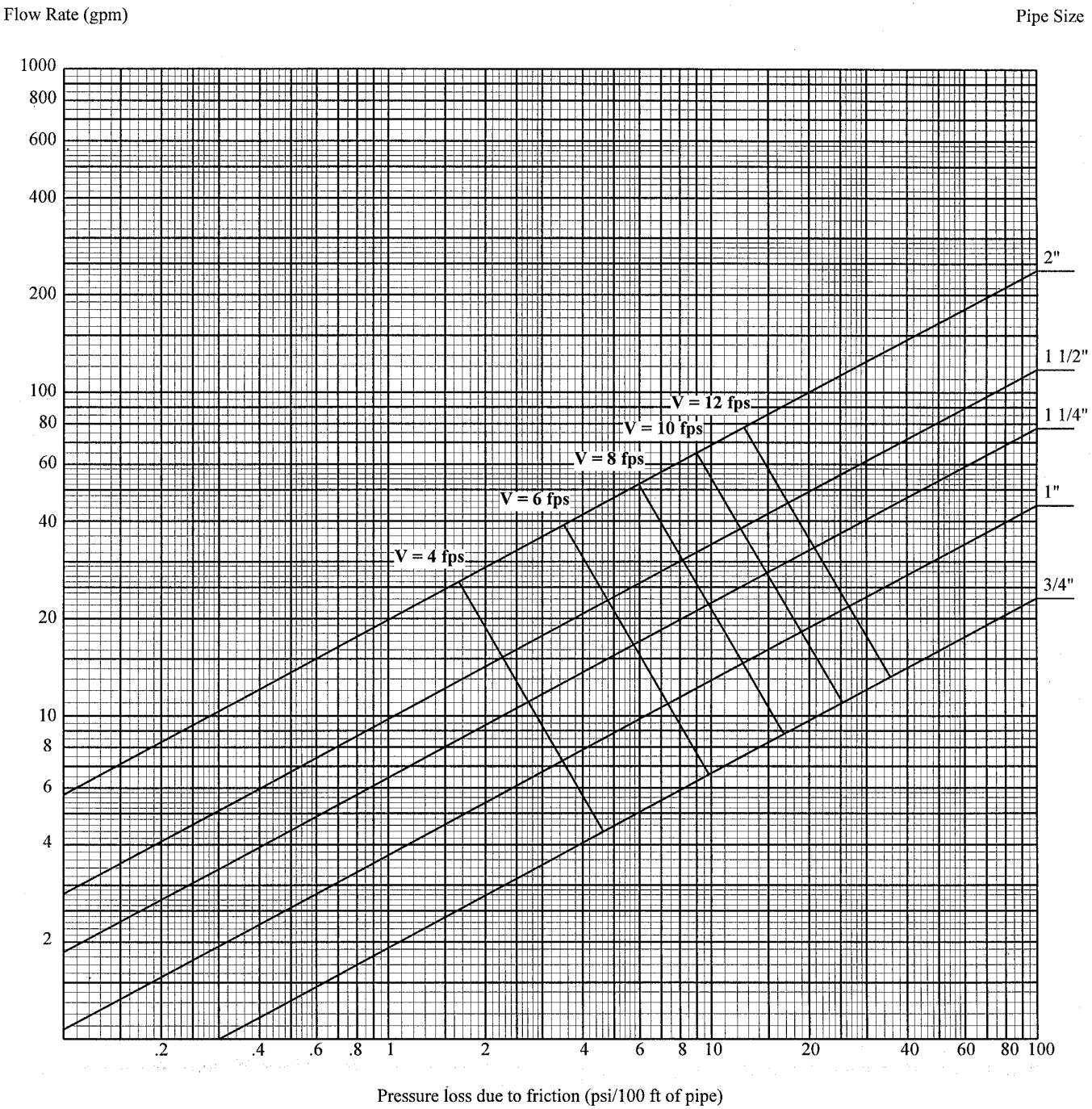

Removed by Register November 2004 No. 587. For current adm. code see: http://docs.legis.wisconsin.gov/code/admin_code.



**Graph A−82.40 (7)−8**
Pressure losses due to flow friction
Material: ABS Pipe−Schedule 40; ASTM D1527; or
CPVC Pipe−Schedule 40; ASTM F441; or
PE Pipe−Schedule 40; ASTM D2104; ASTM D2447; or
PVC Pipe−Schedule 40; ASTM D1785; ASTM D2672; (C =150)

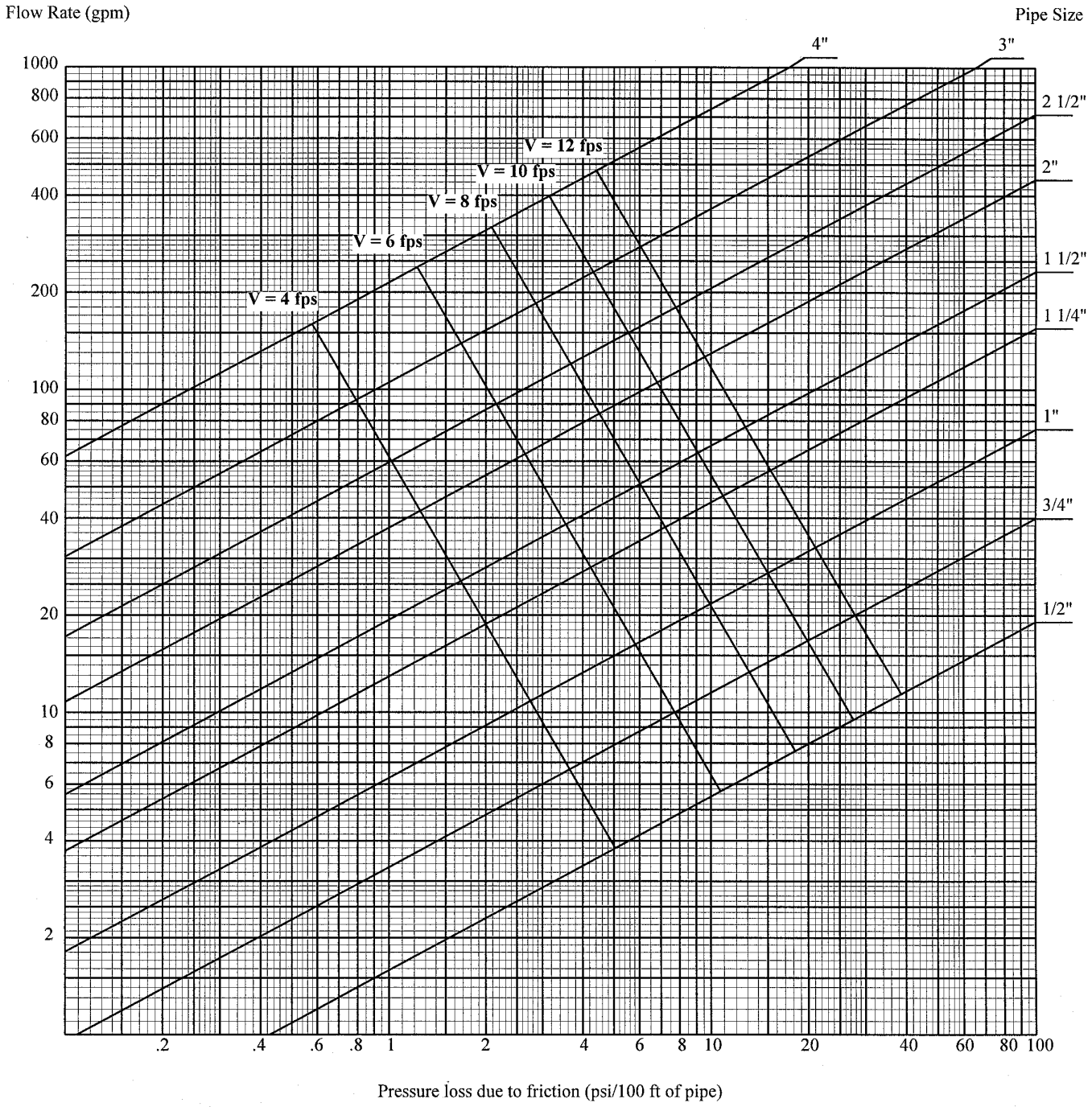

Removed by Register November 2004 No. 587. For current adm. code see: http://docs.legis.wisconsin.gov/code/admin_code.



**Graph A−82.40 (7)−9**
Pressure losses due to flow friction
Material: Copper Tube−Type M, ASTM B88; (C = 150)

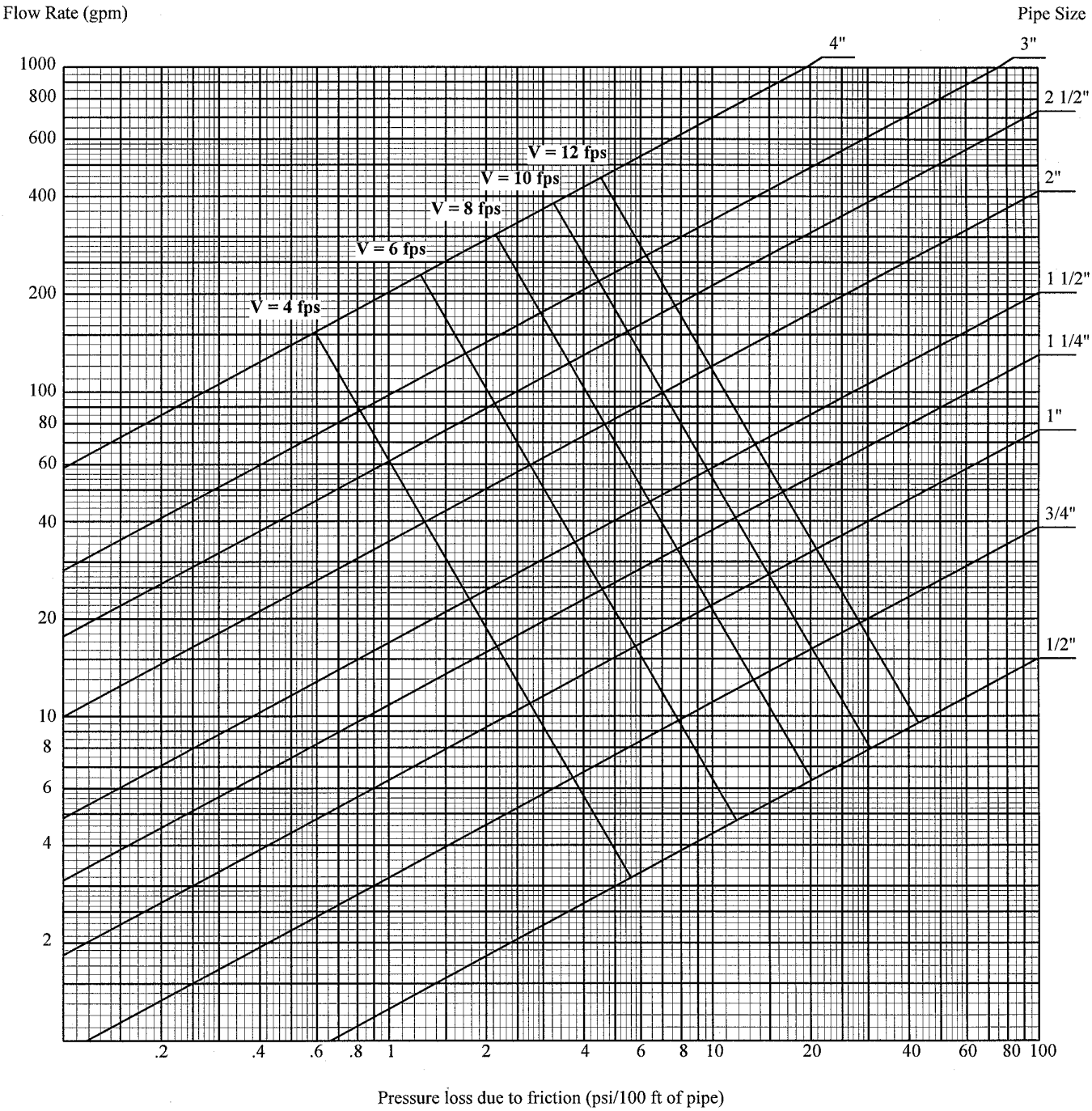

Removed by Register November 2004 No. 587. For current adm. code see: http://docs.legis.wisconsin.gov/code/admin_code.



**Graph A−82.40 (7)−10**

Pressure losses due to flow friction

Material: Polyethylene Aluminum Polyethylene Tubing (PexAlPex), ASTM F1281; (C = 150)

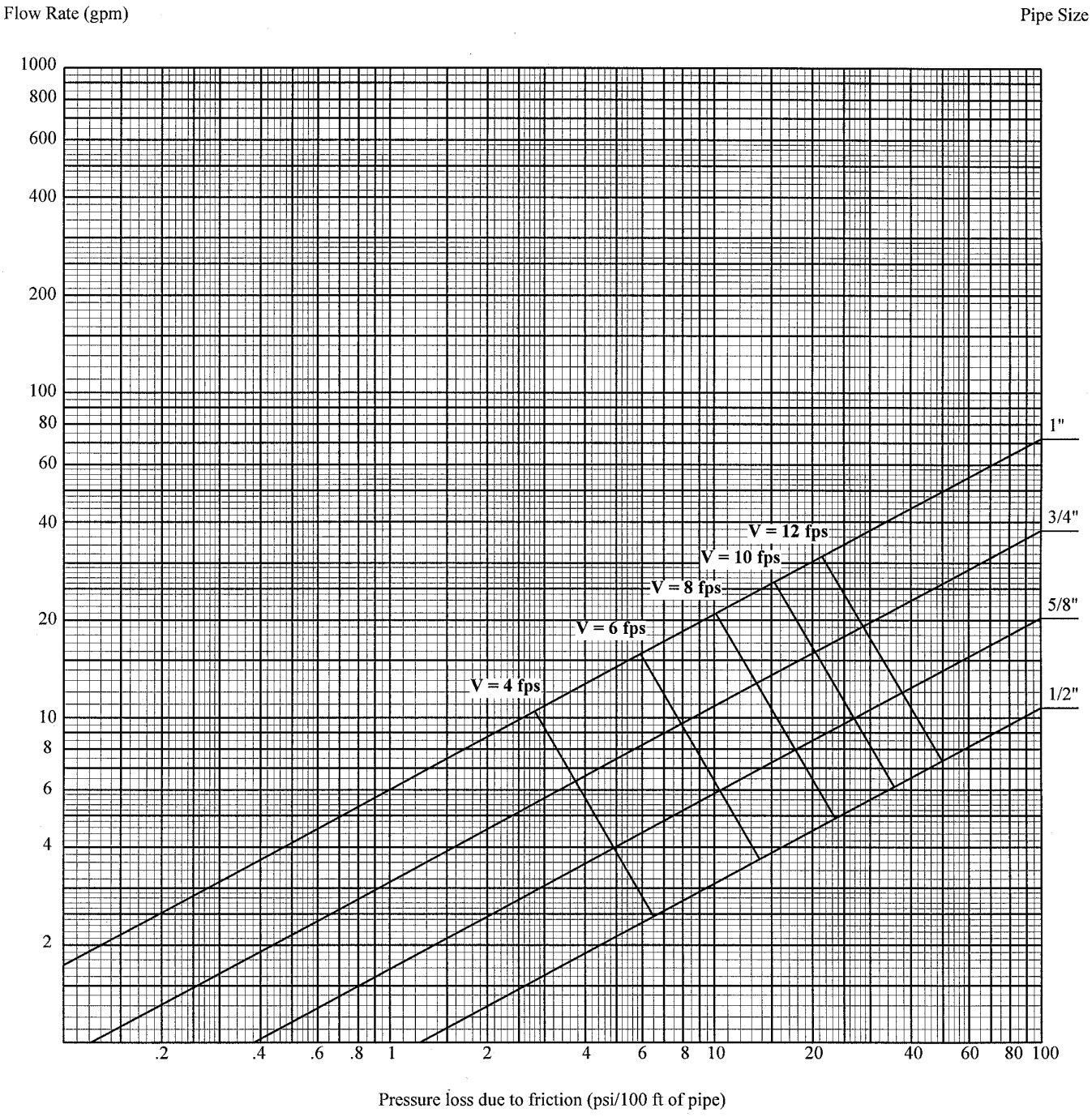

Removed by Register November 2004 No. 587. For current adm. code see: http://docs.legis.wisconsin.gov/code/admin_code.



**Graph A−82.40 (7)−11**
Pressure losses due to flow friction
Material: CPVC Tubing, SDR 13.5; ASTM F442; (C = 150)

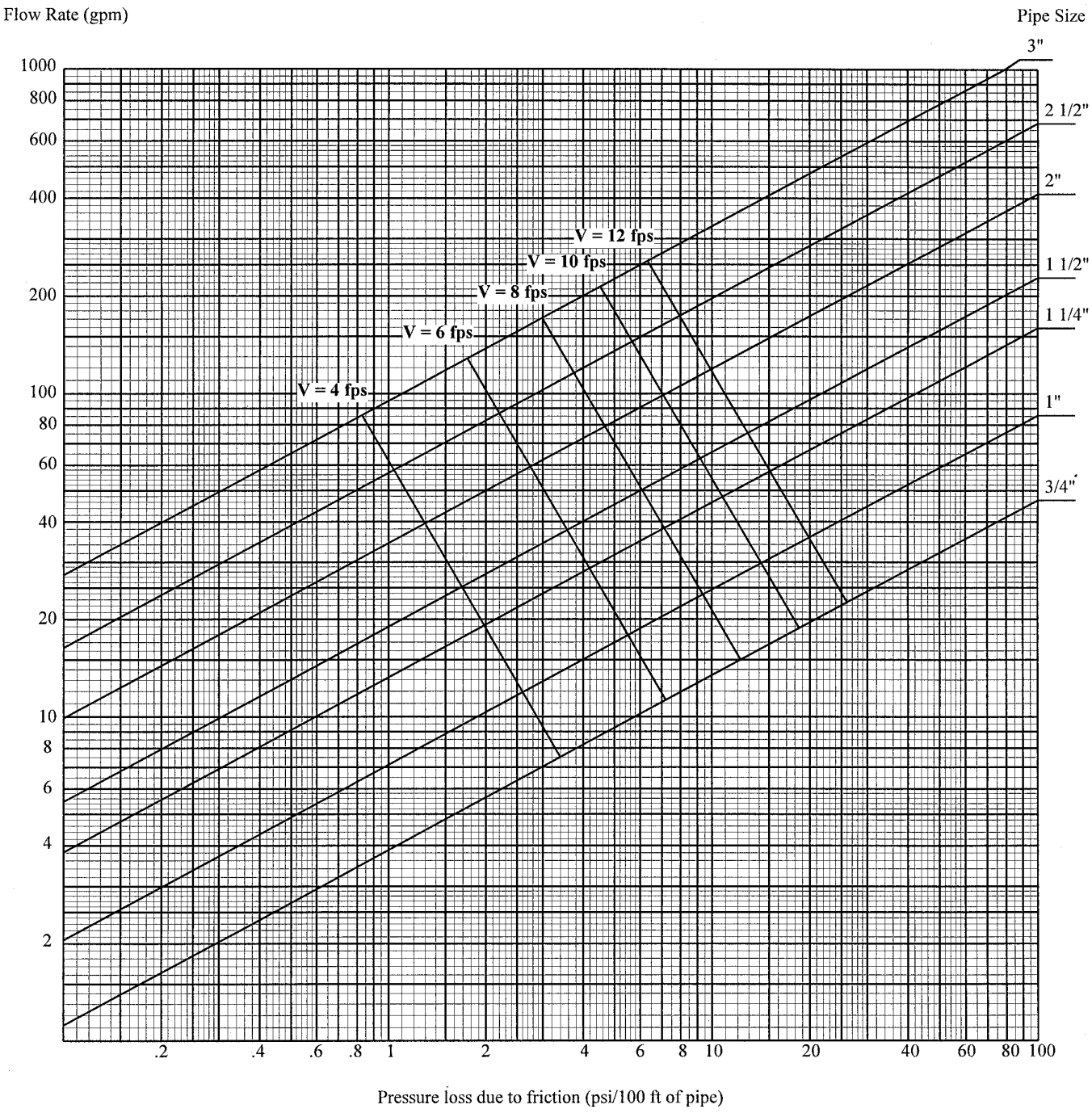

Removed by Register November 2004 No. 587. For current adm. code see: http://docs.legis.wisconsin.gov/code/admin_code.



**A82.41 (4) (g) 2.** TEST OUTLET

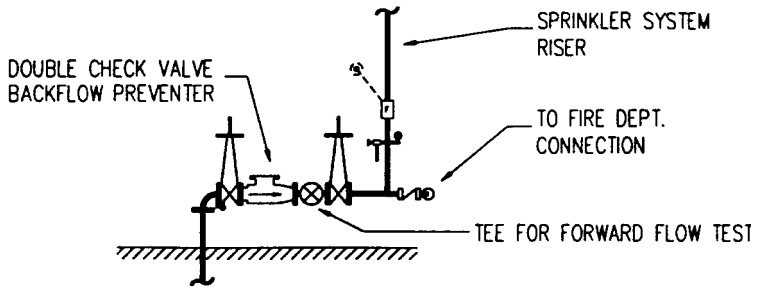


SINGLE WET SYSTEM ARRANGEMENT

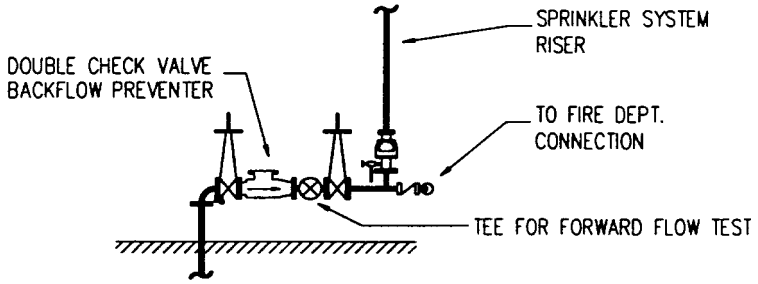


SINGLE DRY SYSTEM ARRANGEMENT

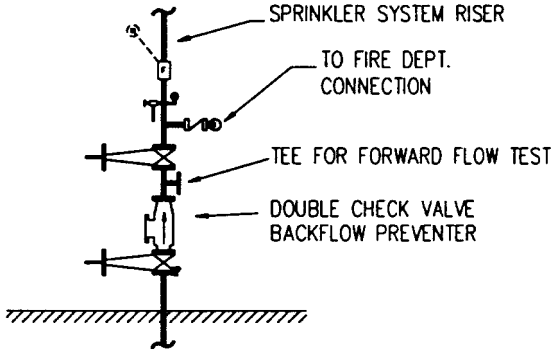


SINGLE WET SYSTEM ARRANGEMENT

Removed by Register November 2004 No. 587. For current adm. code see: http://docs.legis.wisconsin.gov/code/admin_code.



**A−82.41 (5) (a)** AIR GAP.

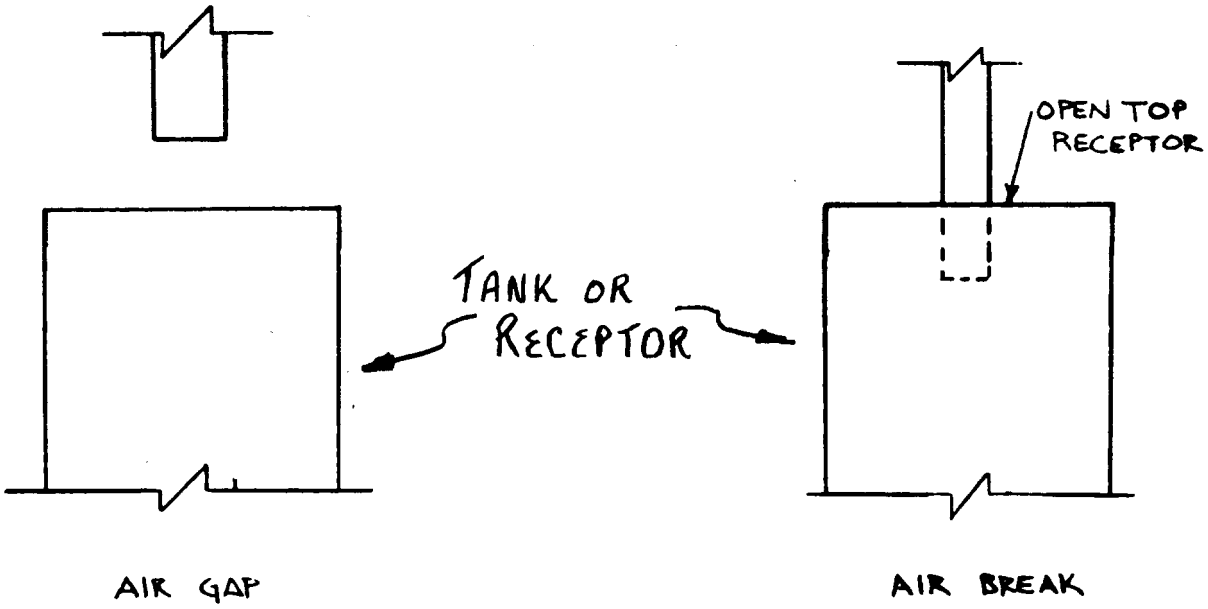


ANSI STANDARD A112.1.2 DESCRIBES OTHER ACCEPTABLE TYPES OF AIR GAPS.

Removed by Register November 2004 No. 587. For current adm. code see: http://docs.legis.wisconsin.gov/code/admin_code.



**A−82.41 (5) (f)** CROSS CONNECTION CONTROL DEVICE INSTALLATION.

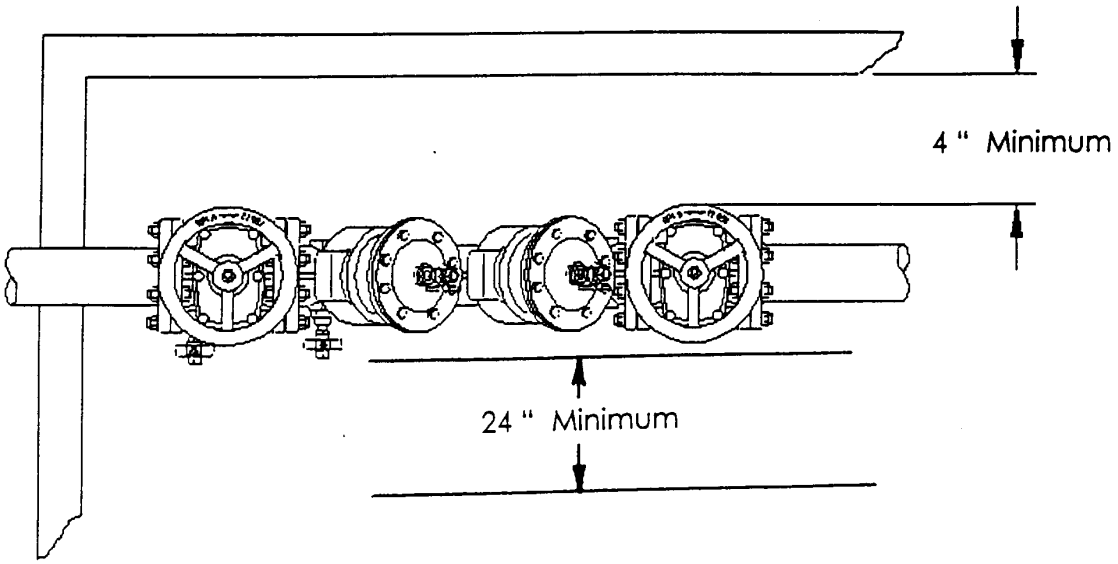


NOTE: ASSEMBLIES SHALL BE INSTALLED IN ACCORDANCE WITH THE MANUFACTURER'S WRITTEN INSTALLATION SPECIFICATIONS OR WITHIN THE DIMENSIONS SHOWN.

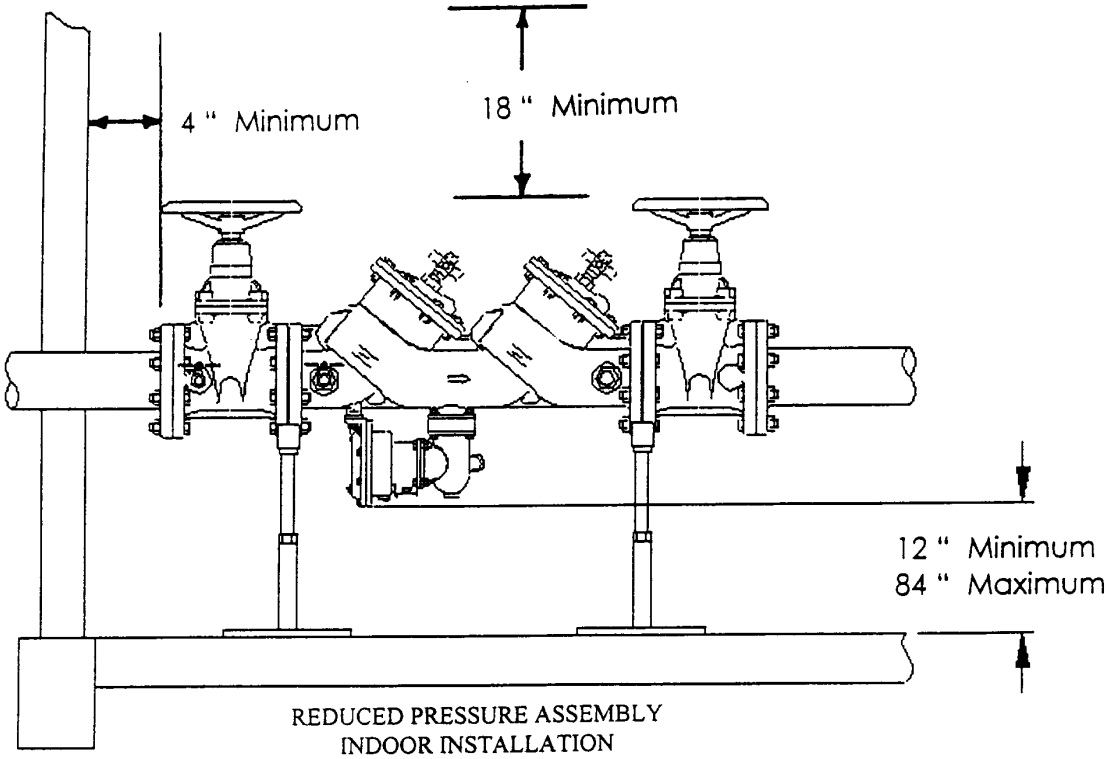


REDUCED PRESSURE ASSEMBLY
INDOOR INSTALLATION

Removed by Register November 2004 No. 587. For current adm. code see: http://docs.legis.wisconsin.gov/code/admin_code.



**A−82.41 (5) (f)** CROSS CONNECTION CONTROL DEVICE INSTALLATION.

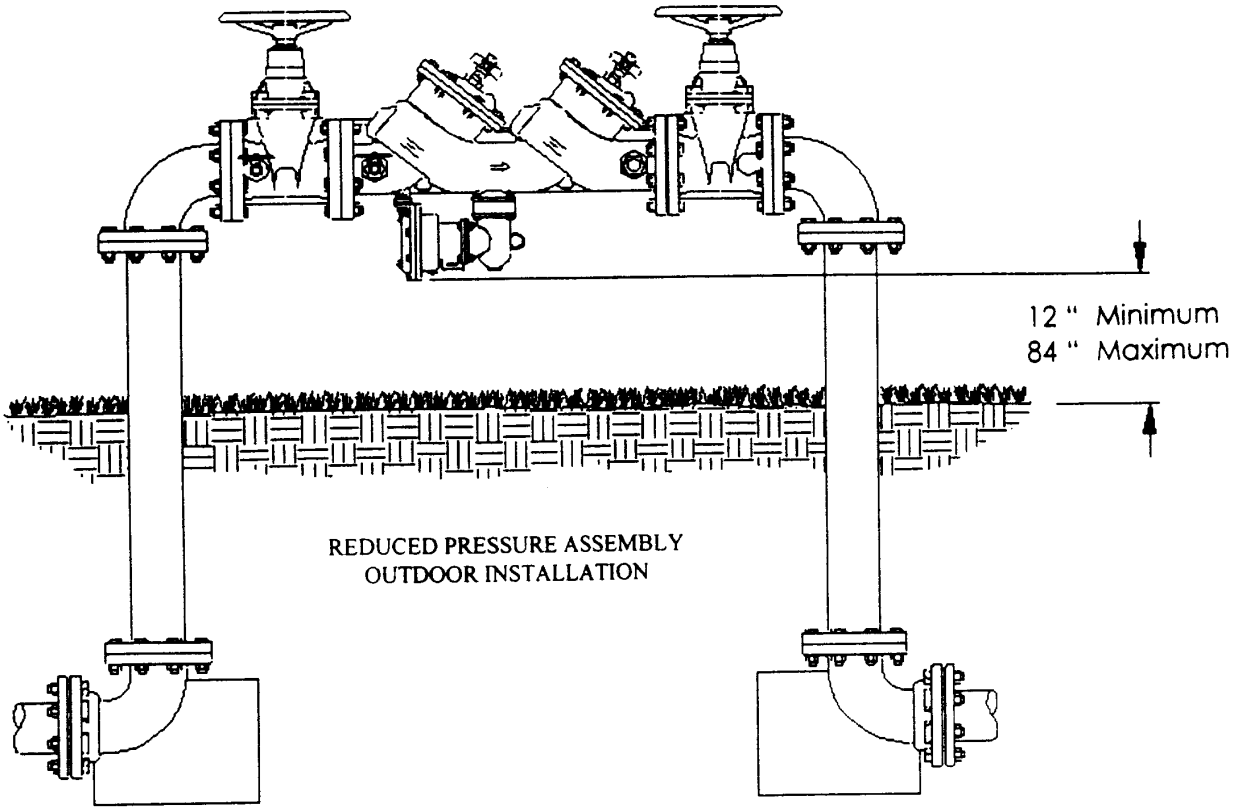


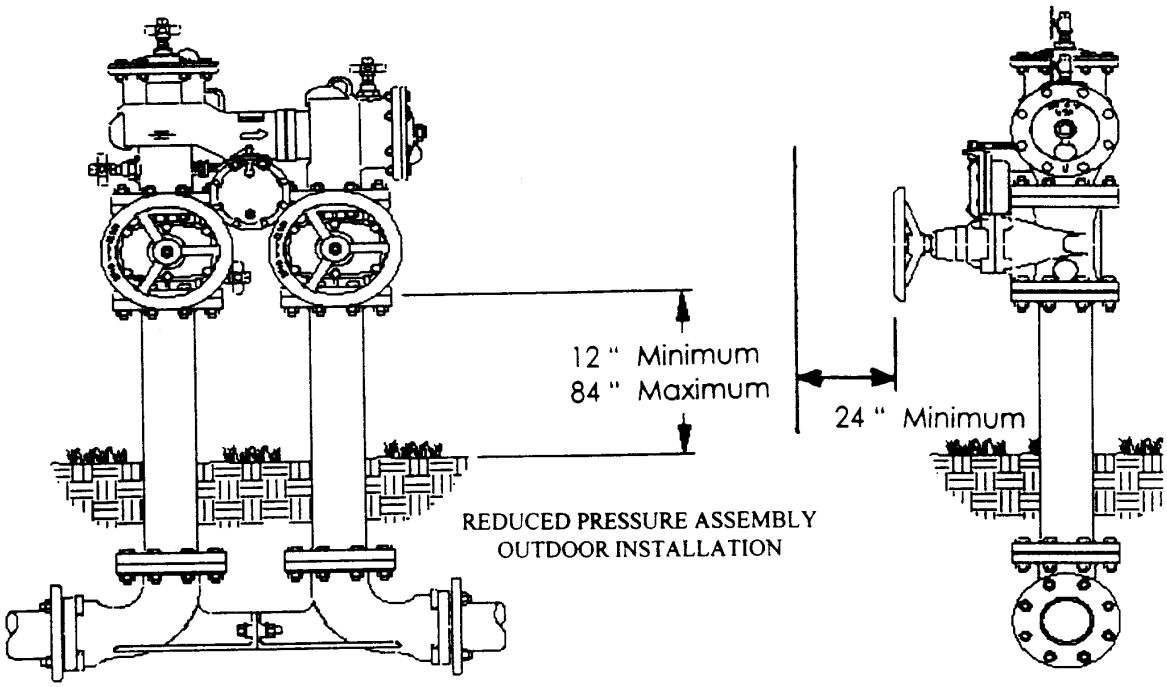

Removed by Register November 2004 No. 587. For current adm. code see: http://docs.legis.wisconsin.gov/code/admin_code.



**A−82.41 (5) (f)** CROSS CONNECTION CONTROL DEVICE INSTALLATION

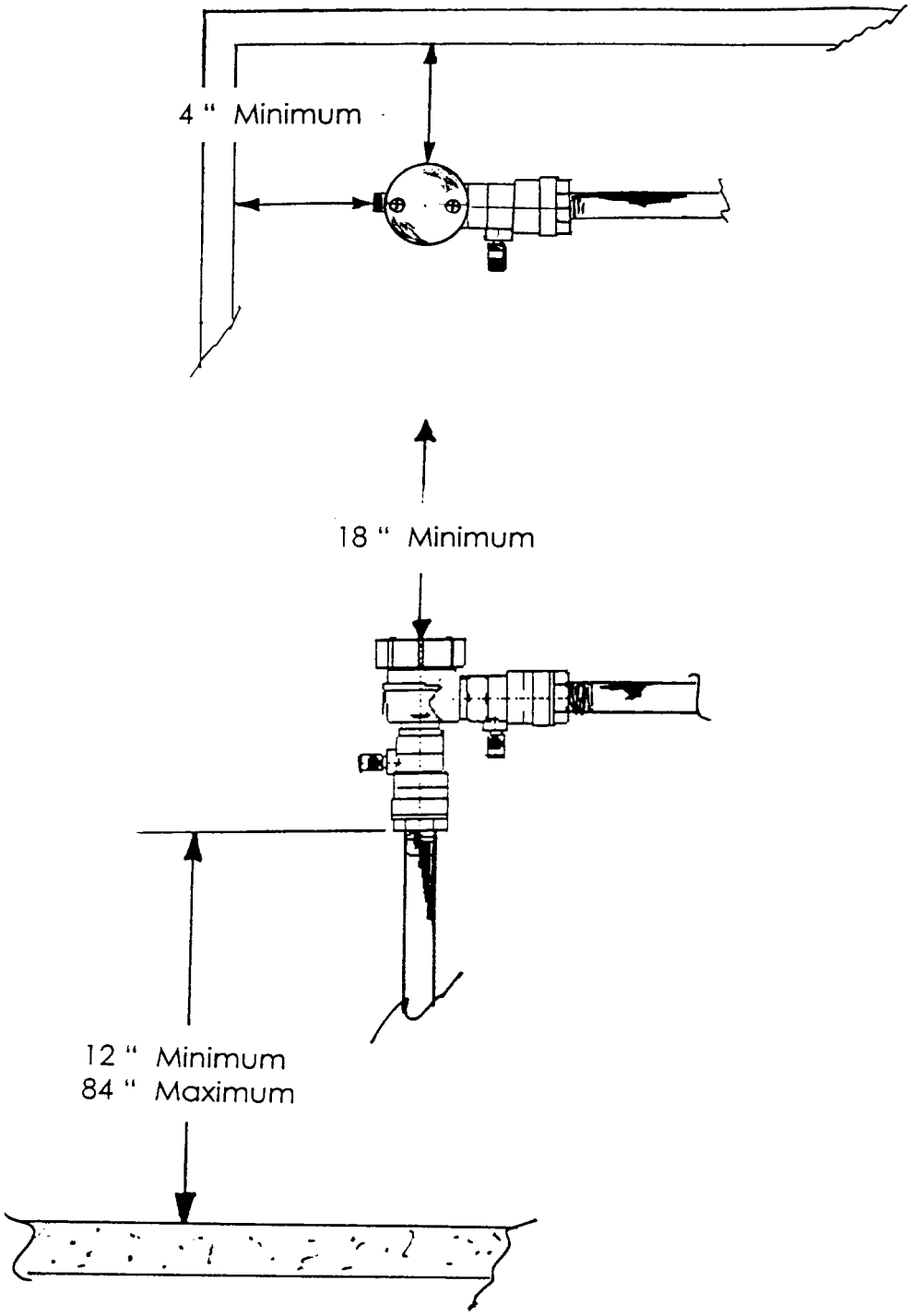


PRESSURE VACUUM BREAKER ASSEMBLY
BACK SIPHONAGE BACKFLOW VACUUM BREAKER

Removed by Register November 2004 No. 587. For current adm. code see: http://docs.legis.wisconsin.gov/code/admin_code.



**A−82.41 (5) (f)** CROSS CONNECTION CONTROL DEVICE INSTALLATION.

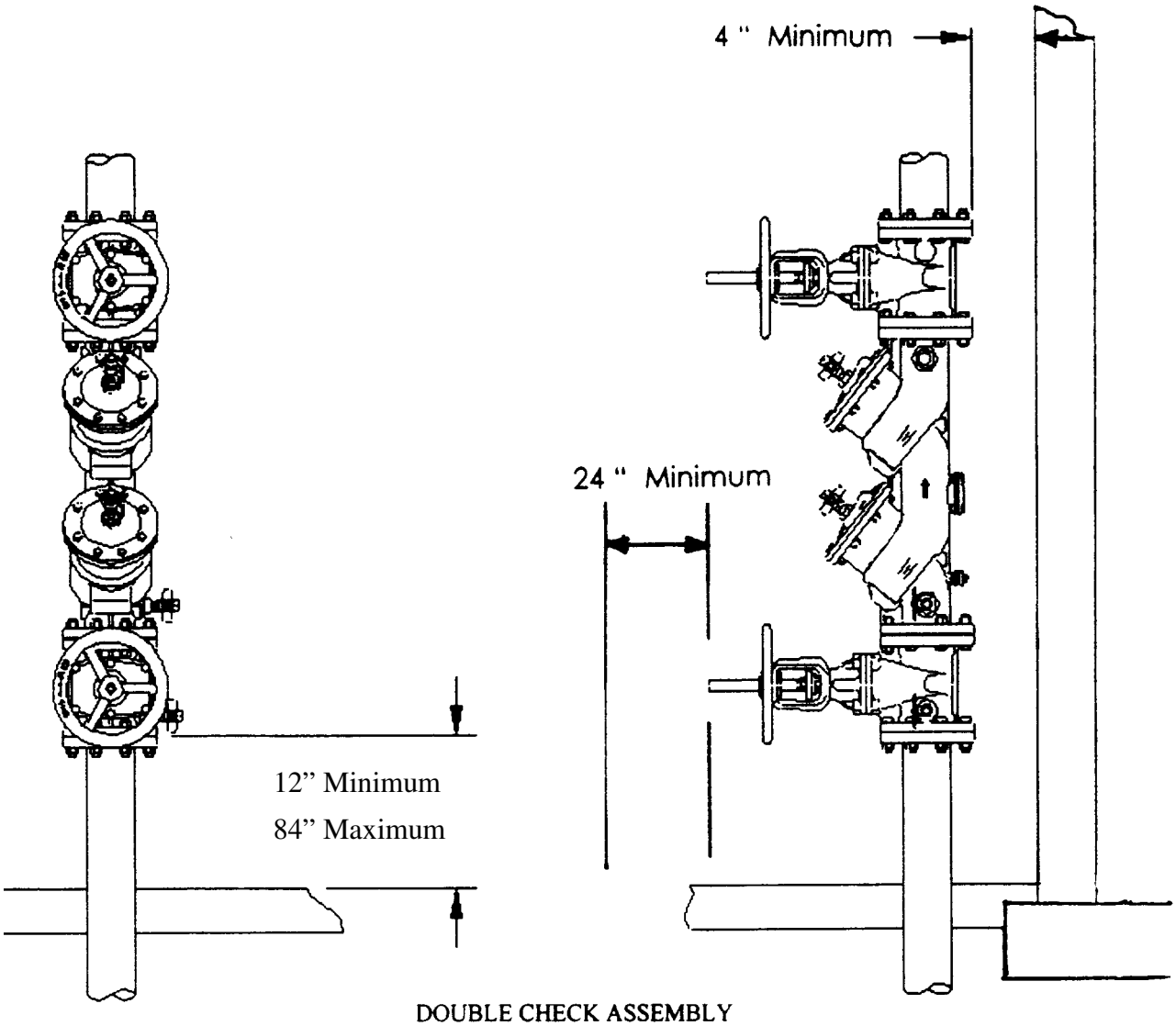


DOUBLE CHECK ASSEMBLY
INDOOR VERTICAL INSTALLATION

Removed by Register November 2004 No. 587. For current adm. code see: http://docs.legis.wisconsin.gov/code/admin_code.



**A–82.41 (5) (f)** CROSS CONNECTION CONTROL DEVICE INSTALLATION.

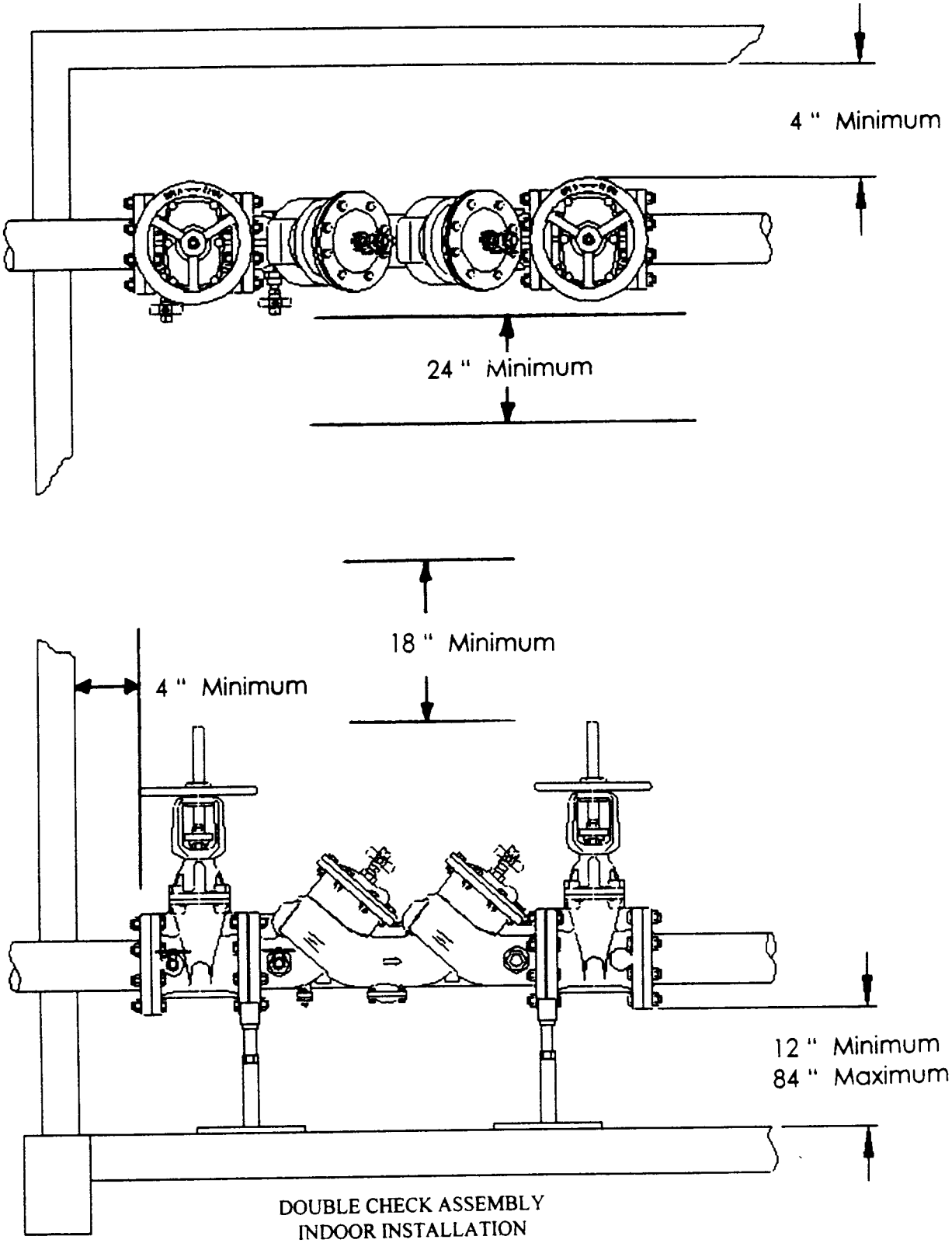


DOUBLE CHECK ASSEMBLY
INDOOR INSTALLATION

Removed by Register November 2004 No. 587. For current adm. code see: http://docs.legis.wisconsin.gov/code/admin_code.



**A−82.50 (3) (b) 6**. OPTIONS FOR TEMPERATURE CONTROL IN HEALTH CARE FACILITIES. The following sketches provide options for fail safe installations at the bathing and shower fixture, and temperature control at handwashing fixtures.

Removed by Register November 2004 No. 587. For current adm. code see: http://docs.legis.wisconsin.gov/code/admin_code.

Removed by Register November 2004 No. 587. For current adm. code see: http://docs.legis.wisconsin.gov/code/admin_code.

Removed by Register November 2004 No. 587. For current adm. code see: http://docs.legis.wisconsin.gov/code/admin_code.



**A–82.51 (3)** MOBILE HOME SITES AND PARKS.

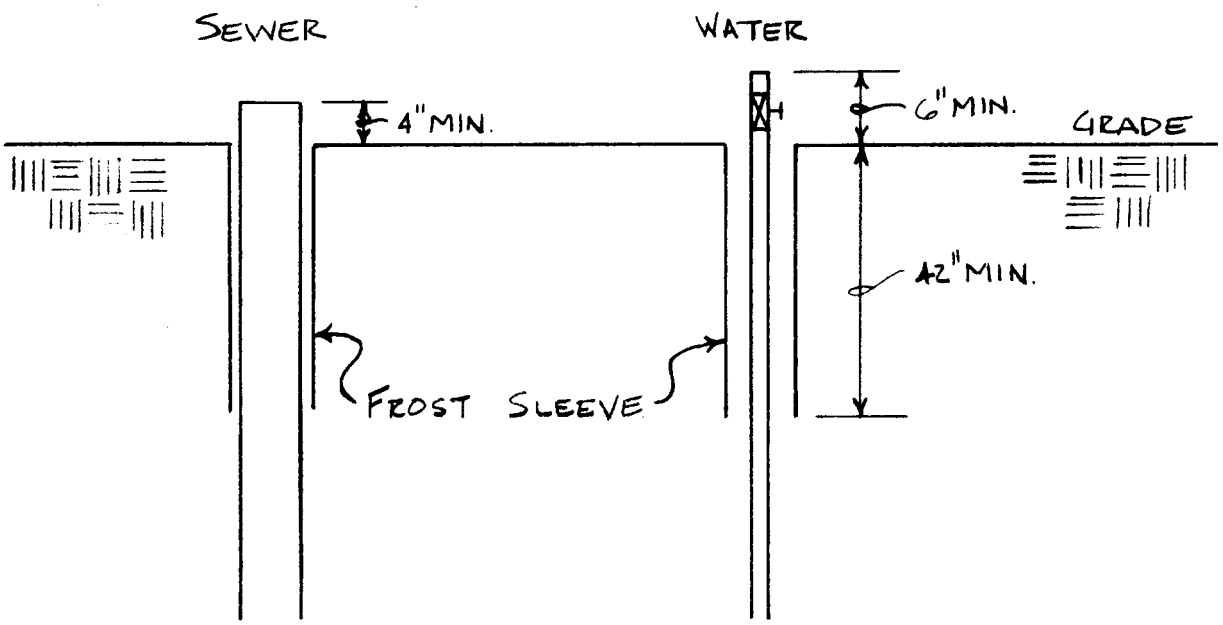


MOBILE HOME BUILDING SEWER AND WATER SERVICE TERMINATIONS