# Chapter Comm 41

## APPENDIX

## (EXCERPTS FROM BOILER, PRESSURE VESSEL AND PIPING CODES AND STANDARDS)

Excerpts from the following boiler, pressure vessel and piping codes and standards are reproduced here strictly for reference: ASME Sections I, IV and VIII and ANSI/ASME B31.1. This information has been included to provide a general idea as to the requirements of these codes and standards. Users of this information must be cautioned that these excerpts do not provide complete guidelines for inspection, installation, operation and manufacturing.

Only portions of each code and standard thought to be frequently used by persons not having direct access to the complete documents have been included. It must be noted that these codes and standards change on a periodic basis as indicated in s. Comm 41.10. Those who are bound by the rules of ch. Comm 41 must avail themselves of the applicable code section or standards listed in s. Comm 41.10.

Removed by Register October 2005 No. 598. For current adm. code see: http://docs.legis.wisconsin.gov/code/admin_code.



## EXCERPTS FROM:

# ASME BOILER AND PRESSURE VESSEL CODE
# SECTION I
# POWER BOILERS
# 1998 EDITION

## PREAMBLE

This Code covers rules for construction of power boilers, electric boilers, miniature boilers, and high−temperature water boilers to be used in stationary service and includes those power boilers used in locomotive, portable, and traction service. Reference to a paragraph includes all the subparagraphs and subdivisions under that paragraph.

The Code does not contain rules to cover all details of design and construction. Where complete details are not given, it is intended that the manufacturer, subject to the acceptance of the Authorized Inspector, shall provide details of design and construction which will be as safe as otherwise provided by the rules in the Code.

The scope of jurisdiction of Section I applies to the boiler proper and to the boiler external piping.

Superheaters, economizers, and other pressure parts connected directly to the boiler without intervening valves shall be considered as parts of the boiler proper, and their construction shall conform to Section I rules.

Boiler external piping shall be considered as that piping which begins where the boiler proper or separately fired superheater terminates at:

(a) the first circumferential joint for welding end connections; or

(b) the face of the first flange in bolted flanged connections; or

(c) the first threaded joint in that type of connection; and which extends up to and including the valve or valves required by this Code.

ASME Code Certification (including Data Forms and Code Symbol Stamping), and/or inspection by the Authorized Inspector, when required by this Code, is required for the boiler proper and the boiler external piping.

Construction rules for materials, design, fabrication, installation, and testing of the boiler external piping are contained in ASME B31.1, Power Piping. Piping beyond the valve or valves required by Section I is not within the scope of Section I, and it is not the intent that the Code Symbol Stamp be applied to such piping or any other piping.

The material for forced−circulation boilers, boilers with no fixed steam and water line, and high−temperature water boilers shall conform to the requirements of the Code. All other requirements shall also be met except where they relate to special features of construction made necessary in boilers of these types, and to accessories that are manifestly not needed or used in connection with such boilers, such as water gages and water columns.

Reheaters receiving steam which has passed through part of a turbine or other prime mover and separately fired steam superheaters which are not integral with the boiler are considered fired pressure vessels and their construction shall comply with Code requirements for superheaters, including safety devices. Piping between the reheater connections and the turbine or other prime mover is not within the scope of the Code.

A pressure vessel in which steam is generated by the application of heat resulting from the combustion of fuel (solid, liquid, or gaseous) shall be classed as a fired steam boiler.

Unfired pressure vessels in which steam is generated shall be classed as unfired steam boilers with the following exceptions:

(a) Vessels known as evaporators or heat exchangers;

(b) Vessels in which steam is generated by the use of heat resulting from operation of a processing system containing a number of pressure vessels such as used in the manufacture of chemical and petroleum products.

Unfired steam boilers shall be constructed under the provisions of Section I or Section VIII.

Expansion tanks required in connection with high−temperature water boilers shall be constructed to the requirements of Section I or Section VIII.

A pressure vessel in which an organic fluid is vaporized by the application of heat resulting from the combustion of fuel (solid, liquid, or gaseous) shall be constructed under the provisions of Section I. Vessels in which vapor is generated incidental to the operation of a processing system, containing a number of pressure vessels such as used in chemical and petroleum manufacture, are not covered by the rules of Section I.

Removed by Register October 2005 No. 598. For current adm. code see: http://docs.legis.wisconsin.gov/code/admin_code.



# PART PG

# GENERAL REQUIREMENTS FOR ALL METHODS OF CONSTRUCTION

## GENERAL

### PG−1 SCOPE

The requirements of Part PG apply to power boilers and high pressure, high−temperature water boilers and to parts and appurtenances thereto and shall be used in conjunction with the specific requirements in the applicable Parts of this Section that pertain to the methods of construction used.

### PG−2 SERVICE LIMITATIONS

**PG−2.1** The rules of this Section are applicable to the following services:

(a) boilers in which steam or other vapor is generated at a pressure of more than 15 psig;

(b) high−temperature water boilers intended for operation at pressures exceeding 160 psig and/or temperatures exceeding 250°F.

**PG−2.2** For services below those specified in PG−2.1 it is intended that rules of Section IV apply; however, boilers for such services may be constructed and stamped in accordance with this Section provided all applicable requirements are met.

**PG−2.3** Coil−type hot water boilers where the water can flash into steam when released directly to the atmosphere through a manually operated nozzle may be exempted from the rules of this Section provided the following conditions are met.

(a) There is no drum, header, or other steam space.

(b) No steam is generated within the coil.

(c) Tubing outside diameter does not exceed 1 in.

(d) Pipe size does not exceed NPS 3/4.

(e) Nominal water capacity does not exceed 6 gal.

(f) Water temperature does not exceed 350°F.

(g) Adequate safety relief valves and controls are provided.

## BOILER EXTERNAL PIPING AND BOILER PROPER CONNECTIONS

### PG−58 OUTLETS AND EXTERNAL PIPING

**PG−58.1 General.** The rules of this subparagraph apply to the boiler external piping as defined in the Preamble.

**PG−58.2 Boiler External Piping Connections to Boilers.** All boiler external piping connected to a boiler for any purpose shall be attached to one of the types of joints listed in PG−59.1.1.1, PG−59.1.1.2, and PG−59.1.1.3.

**PG−58.3 Boiler External Piping.** The following defines the Code Jurisdictional Limits of the boiler external piping systems, including general requirements, valves, and inspection. The limits are also shown in Fig. PG−58.3.1 and Fig. PG−58.3.2. The materials, design, fabrication, installation, and testing shall be in accordance with ASME B31.1, Power Piping.

**PG−58.3.1** The steam piping connected to the boiler drum or to the superheater outlet header shall extend up to and including the first stop valve in each connection, except as required by PG−58.3.2. In the case of a single boiler and prime mover installation, the stop valve required herein may be omitted provided the prime mover throttle valve is equipped with an indicator to show whether the valve is open or closed and is designed to withstand the required hydrostatic pressure test of the boiler.

For an isolable or separately fired superheater which discharges steam directly to a process stream, the stop valve required by this paragraph and the safety valves(s) required by PG−68 may be omitted provided the following conditions are satisfied:

(a) The boiler is a drum−type boiler in a single−boiler installation.

(b) The steam discharge passes through the process stream to the atmosphere with no intervening valves.

(c) The system shall be designed so that the process stream through which the steam discharge passes cannot be obstructed in such a way as to cause the pressure in the superheater to exceed that permitted by PG−67.2, with maximum steam flow from the boiler to the superheater. Flow and pressure calculations demonstrating that the superheater will not be overpressurized under any steam flow conditions shall be documented and made available to the Inspector. These calculations shall be certified by a Professional Engineer experienced in the mechanical design of power plants.

(d) There is no valve on the discharge side of the superheater.

(e) Section I jurisdiction shall include the pressure parts between the superheater inlet and the outlet at:

(1) the first circumferential joint for welding end connections; or

(2) the face of the first flange in bolted flange connections; or

(3) the first threaded joint in that type of connection.

**PG−58.3.2** When two or more boilers are connected to a common steam header, or when a single boiler is connected to a header having another steam source (e.g., a turbine extraction line), the connection from each boiler having a manhole opening shall be fitted with two stop valves having an ample free−blow drain between them. The boiler external piping includes all piping from the boiler proper up to and including the second stop valve and the free−blow drain valve.

**PG−58.3.3** The feedwater piping for all boilers, except high−temperature water boilers and forced−flow steam generators complying with PG−58.3.5, shall extend through the required stop valve and up to and including the check valve except as required by PG−58.3.4. On a single boiler−turbine unit installation the boiler feed shutoff valve may be located upstream from the boiler feed check valve.

If a feedwater heater or heaters meeting the requirements of Part PFH are installed between the required stop valve and the

Removed by Register October 2005 No. 598. For current adm. code see: http://docs.legis.wisconsin.gov/code/admin_code.



boiler, and are fitted with isolation and bypass valves, provisions must be made to prevent the feedwater pressure from exceeding the maximum allowable working pressure of the piping or heater, whichever is less. Control and interlock systems are permitted in order to prevent overpressure.

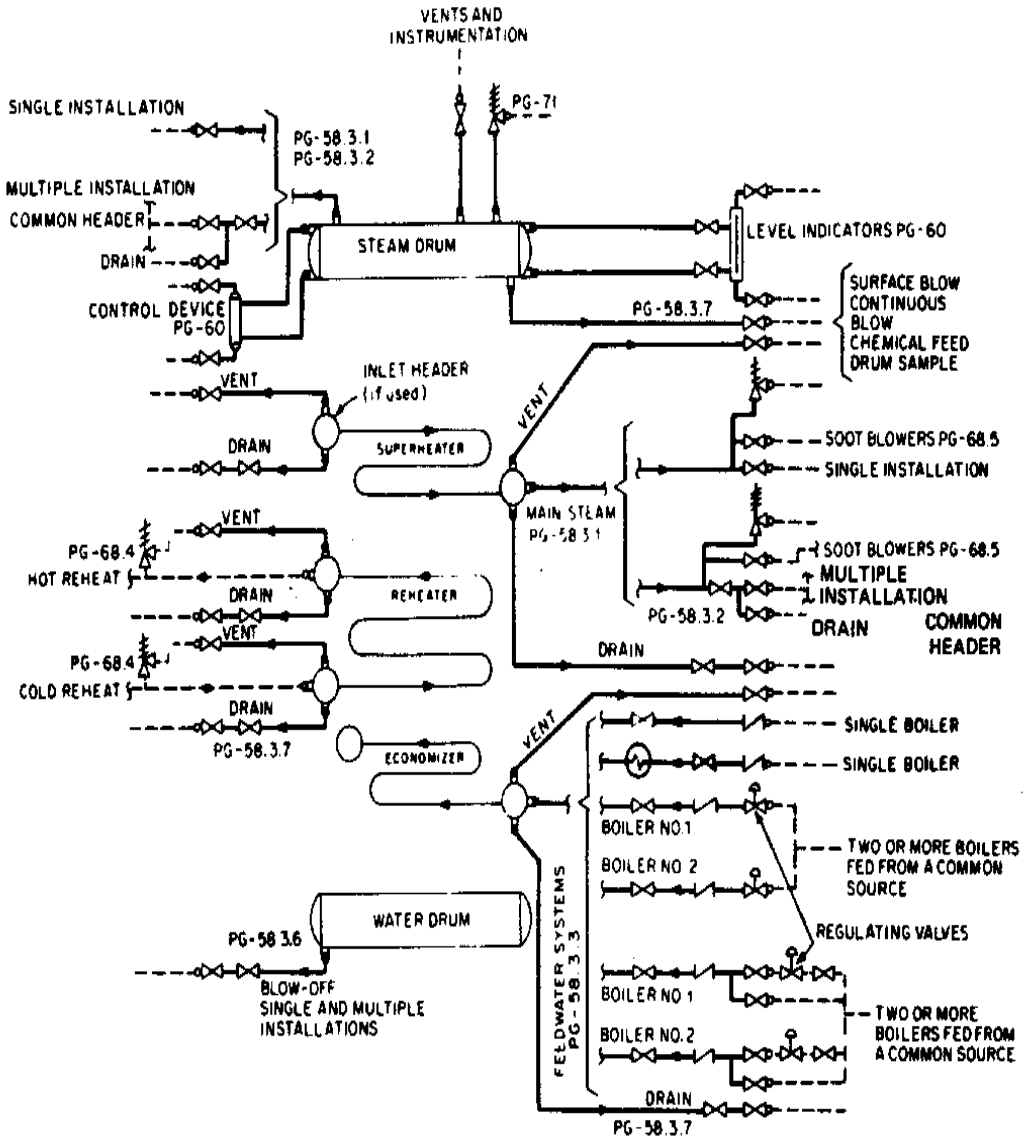


ADMINISTRATIVE JURISDICTION & TECHNICAL RESPONSIBILITY

____ Boiler Proper − The ASME Boiler and Pressure Vessel Code (ASME BPVC) has total administrative jurisdiction and technical responsibility (refer to Section I Preamble).

•—— Boiler External Piping and Joint − The ASME BPVC has total administrative jurisdiction (mandatory certification by Code Symbol stamping, ASME Data Forms, and Authorized Inspection) of Boiler External Piping and Joint. The ASME Section Committee B31.1 has been assigned technical responsibility.

o− − − Non−Boiler External Piping and Joint − Not Section I jurisdiction (see applicable ASME B31 Code).

FIG. PG−58.3.1 CODE JURISDICTIONAL LIMITS FOR PIPING − DRUM TYPE BOILERS

Removed by Register October 2005 No. 598. For current adm. code see: http://docs.legis.wisconsin.gov/code/admin_code.



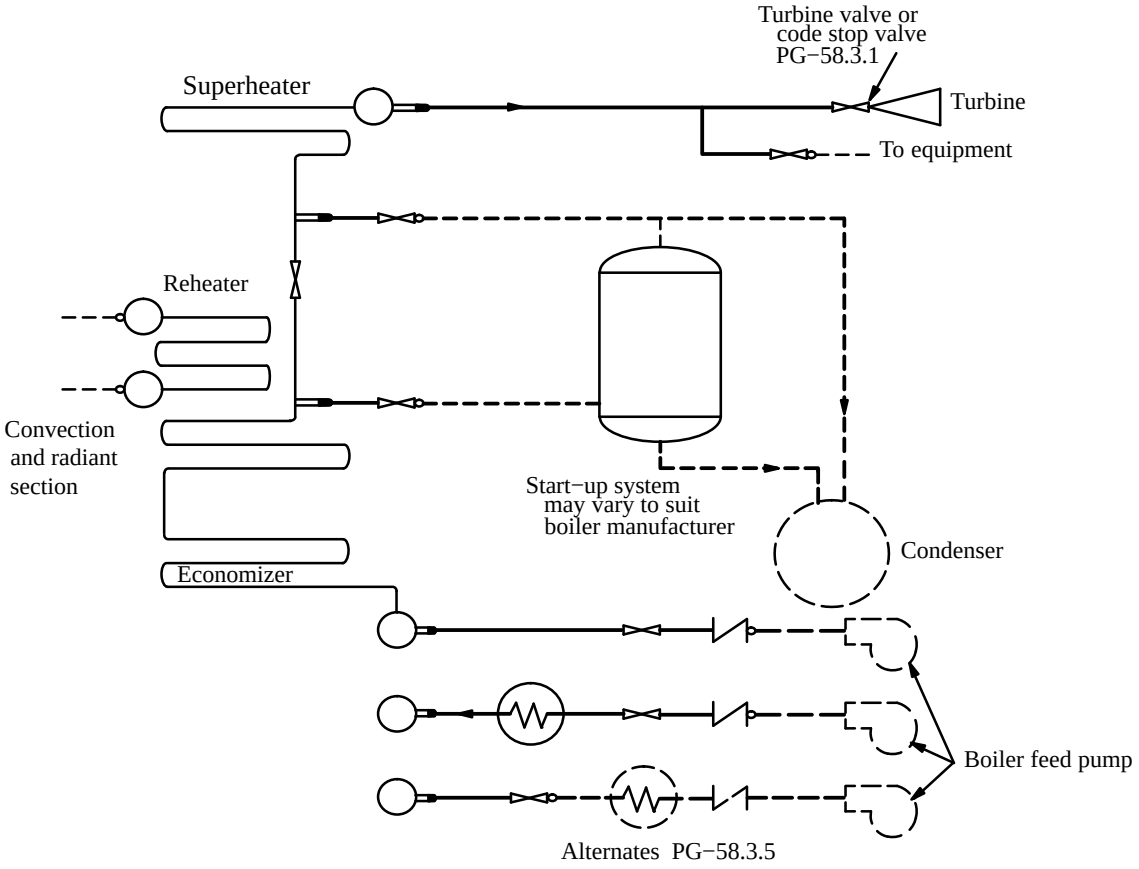


ADMINISTRATIVE JURISDICTION & TECHNICAL RESPONSIBILITY

____ Boiler Proper − The ASME Boiler and Pressure Vessel Code (ASME BPVC) has total administrative jurisdiction and technical responsibility (refer to Section I Preamble).

•—— Boiler External Piping and Joint − The ASME BPVC has total administrative jurisdiction (mandatory certification by Code Symbol stamping, ASME Data Forms, and Authorized Inspection) of Boiler External Piping and Joint. The ASME Section Committee B31.1 has been assigned technical responsibility.

o− − − Non−Boiler External Piping and Joint − Not Section I jurisdiction (see applicable ASME B31 Code).

FIG. PG−58.3.2 CODE JURISDICTIONAL LIMITS FOR PIPING − FORCED−FLOW STEAM GENERATOR WITH NO FIXED STEAM OR WATERLINE

Removed by Register October 2005 No. 598. For current adm. code see: http://docs.legis.wisconsin.gov/code/admin_code.



**PG−58.3.4** When two or more boilers are fed from a common source, the piping shall be up to and including a globe or regulating valve located between the check valve required in PG−58.3.3 and the source of supply. If the regulating valve is equipped with an isolation valve and a bypass valve, the piping shall be up to and including both the isolation valve downstream from the regulating valve and the shutoff valve in the bypass.

**PG−58.3.6** The blowoff piping for all boilers, except forced−flow steam generators with no fixed steam and waterline, high−temperature water boilers, and those used for traction and/or portable purposes, when the maximum allowable working pressure exceeds 100 psi shall extend through and including the second valve. The blowoff piping for all traction and/or portable boilers and for forced circulation and electric boilers having a normal water content not exceeding 100 gal are required to extend through only one valve.

**PG−58.3.7** The miscellaneous piping shall include the piping for such items as drains, vents, surface−blowoff, steam and water piping for water columns, gage glasses and pressure gages, and the recirculation return line for a high−temperature water boiler. When a drain is not intended for blowoff purposes (when the boiler is under pressure) a single valve is acceptable, otherwise two valves in series are required except as permitted by PG−58.3.6.

**PG−58.3.8** Welded piping in PG−58.3.1, PG−58.3.2, PG−58.3.3, PG−58.3.4, PG−58.3.5, PG−58.3.6, and PG−58.3.7 is also subject to the requirements of PG−104 for proper Code certification.

**PG−59 APPLICATION REQUIREMENTS FOR THE BOILER PROPER**

**PG−59.1 Common to Steam, Feedwater, Blowoff, and Drain Systems**

**PG−59.1.1** Outlets of a boiler to which piping is to be attached for any purpose, and which piping comes within the Code requirements, shall meet the requirements of PG−39 and shall be:

**PG−59.1.1.1** A tapped opening.

**PG−59.1.1.2** Bolted flanged joints including those of the Van Stone type.

**PG−59.1.1.3** Welding ends of the butt or socket welding type.

**PG−59.1.1.4** Piping within the boiler proper may be expanded into grooved holes, seal welded if desired. Blowoff piping of firetube boilers shall be attached by threading into a tapped opening with a threaded fitting or valve at the other end if exposed to products of combustion, or by PG−59.1.1.1 or PG−59.1.1.2 if not so exposed (see PFT−49).

**PG−59.1.2 Steam Mains.** Provisions shall be made for the expansion and contraction of steam mains connected to boilers, by providing substantial anchorage at suitable points, so that there shall be no undue strain transmitted to the boiler. Steam reservoirs shall be used on steam mains when heavy pulsations of the steam currents cause vibration of the boiler shell plates.

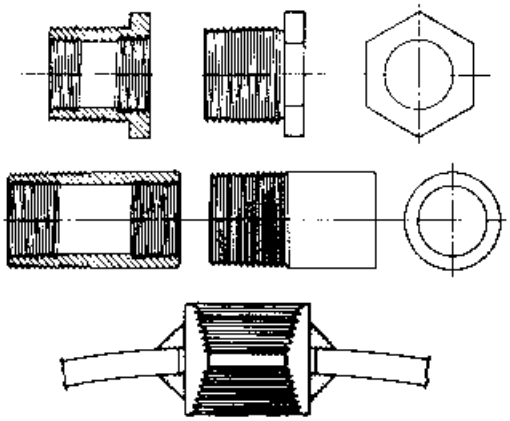

FIG. PG−59.1 TYPICAL BOILER BUSHINGS

**PG−59.1.3** Figure PG−59.1 illustrates a typical form of connection for use on boiler shells for passing through piping such as feed, surface blowoff connections, etc., and which permits the pipes' being threaded in solid from both sides in addition to the reinforcing of the opening of the shell. The pipes shall be attached as provided in PG−59.1.1.

In these and other types of boilers where both internal and external pipes making a continuous passage are employed, the boiler bushing or its equivalent shall be used.

**PG−59.2 Requirements for Feedwater Connections.** The feedwater shall be introduced into a boiler in such a manner that the water will not be discharged directly against surfaces exposed to gases of high temperature or to direct radiation from the fire. For pressures of 400 psi or over, the feedwater inlet through the drum shall be fitted with shields, sleeves, or other suitable means to reduce the effects of temperature differentials in the shell or head. Feedwater, other than condensate returns as provided for in PG−59.3.6, shall not be introduced through the blowoff.

**PG−59.3 Requirements for Blowoffs**

**PG−59.3.1** A blowoff as required herein is defined as a pipe connection provided with valves located in the external piping through which the water in the boiler may be blown out under pressure, excepting drains such as are used on water columns, gage glasses, or piping to feedwater regulators, etc., used for the purpose of determining the operating condition of such equip-

Removed by Register October 2005 No. 598. For current adm. code see: http://docs.legis.wisconsin.gov/code/admin_code.



ment. Piping connections used primarily for continuous operation, such as deconcentrators on continuous blowdown systems, are not classed as blowoffs but the pipe connections and all fittings up to and including the first shutoff valve shall be equal at least to the pressure requirements for the lowest set pressure of any safety valve on the boiler drum and with the corresponding saturated−steam temperature.

**PG−59.3.2** A surface blowoff connection shall not exceed NPS 2½, and the internal pipe and the terminal connection for the external pipe, when used, shall form a continuous passage, but with clearance between their ends and arranged so that the removal of either will not disturb the other. A properly designed steel bushing, similar to or the equivalent of those shown in Fig. PG−59.1, or a flanged connection shall be used.

**PG−59.3.3** Each boiler except forced−flow steam generators with no fixed steam and waterline and high−temperature water boilers shall have a bottom blowoff outlet in direct connection with the lowest water space practicable for external piping conforming to PG−58.3.6.

**PG−59.3.4** All waterwalls and water screens which do not drain back into the boiler, and all integral economizers, shall be equipped with outlet connections for a blowoff or drain line and conform to the requirements of PG−58.3.6 or PG−58.3.7.

**PG−59.3.5** Except as permitted for miniature boilers in Part PMB, the minimum size of blowoff connections shall be NPS 1, and the maximum size shall be NPS 2½, except that for boilers with 100 sq ft of heating surface or less, the minimum size of blowoff connections may be NPS 3/4.

**PG−59.3.6** Condensate return connections of the same size or larger than the size herein specified may be used, and the blowoff may be connected to them. In such case the blowoff shall be so located that the connection may be completely drained.

**PG−59.3.7** A bottom blowoff pipe when exposed to direct furnace heat shall be protected by firebrick or other heat resisting material which is so arranged that the pipe may be inspected.

**PG−59.3.8** An opening in the boiler setting for a blowoff pipe shall be arranged to provide free expansion and contraction.

**PG−59.4 Requirements for Drains**

**PG−59.4.1.1** Each superheater shall be equipped with at least one drain connection so located as to most effectively provide for the proper operation of the apparatus.

**PG−59.4.1.2** Each high−temperature water boiler shall have a bottom drain connection of at least NPS 1 in direct connection with the lowest water space practical for external piping conforming to PG−58.3.7.

**PG−59.5 Requirements for Valves and Fittings.**

The following requirements apply to the use of valves and fittings in the boiler proper.

**PG−59.5.1 Steam Stop Valves**

**PG−59.5.1.1** If a shutoff valve is used between the boiler and its superheater, the safety valve capacity on the boiler shall comply with the requirements of PG−67.2 and PG−70, except as provided for in PG−59.5.1.2, no credit being taken for the safety valve on the superheater, and the superheater must be equipped with safety valve capacity as required by PG−68. A stop valve is not required at the inlet or the outlet of a reheater or separately fired superheater.

**PG−59.5.1.2** When stop valves are installed in the water−steam flow path between any two sections of a forced−flow steam generator with no fixed steam and waterline, the safety valves shall satisfy the requirements of PG−67.4.4.

## DESIGN AND APPLICATION

### PG−60 REQUIREMENTS FOR MISCELLANEOUS PIPE, VALVES, AND FITTINGS

Piping referred to in this paragraph shall be designed in accordance with the applicable requirements of ASME B31.1.

**PG−60.1 Water Level Indicators**

**PG−60.1.2** Forced−flow steam generators with no fixed steam and waterline and the high−temperature water boiler of the forced circulation type require no water gage glass.

**PG−60.1.4** Boilers of the horizontal firetube type shall be so set that when the water is at the lowest reading in the water gage glass there shall be at least 3 in. of water over the highest point of the tubes, flues, or crown sheets.

**PG−60.1.5** Boilers of locomotives shall have at least one water glass provided with top and bottom shutoff cocks and lamp.

The lowest reading of water glass shall not be less than 2 in. above the highest point of crown sheet on boilers 36 in. in diameter and under, nor less than 3 in. for boilers over 36 in. in diameter. These are minimum dimensions, and on large locomotives and those operating on steep grades, the height should be increased, if necessary, to compensate for change of water level on descending grades.

The bottom mounting for water glass and for water column if used must extend not less than 1½ in. inside the boiler and beyond any obstacle immediately above it, and the passage therein must be straight and horizontal.

Tubular water glasses must be equipped with a protecting shield.

**PG−60.1.6** All connections on the gage glass shall be not less than NPS ½. Each water gage glass shall be fitted with a drain cock or valve having an unrestricted drain opening of not less than ¼ in. diameter to facilitate cleaning. When the boiler operating pressure exceeds 100 psi the glass shall be furnished with a connection to install a valved drain to the ash pit or other safe discharge point.

Each water gage glass shall be equipped with a top and a bottom shutoff valve of such through−flow construction as to prevent stoppage by deposits of sediments. If the lowest valve is more than 7 ft above the floor or platform from which it is operated, the operating mechanism shall indicate by its position whether the valve is open or closed. The pressure−temperature rating shall be at least equal to that of the lowest set pressure of any safety valve on the boiler drum and the corresponding saturated−steam temperature.

Removed by Register October 2005 No. 598. For current adm. code see: http://docs.legis.wisconsin.gov/code/admin_code.



Straight−run globe valves shall not be used on such connections.

Automatic shutoff valves, if permitted to be used, shall conform to the requirements given in A−18.

**PG−60.2 Water Columns**

**PG−60.2.1** The water column shall be so mounted that it will maintain its correct position relative to the normal waterline under operating conditions.

**PG−60.2.3** The water column shall be fitted with a connection for a drain cock or drain valve to install a pipe of at least NPS 3/4 to the ash pit or other safe point of discharge.

**PG−60.2.4** The design and material of a water column shall comply with the requirements of PG−42. Water columns made of cast iron in accordance with SA−278 may be used for maximum boiler pressures not exceeding 250 psi. Water columns made of ductile iron in accordance with SA−395 may be used for maximum boiler pressures not exceeding 350 psi. For higher pressures, steel construction shall be used.

**PG−60.3 Connections**

**PG−60.3.1** Gage glasses that are required by PG−60.1 shall be connected directly to the shell or drum of the boiler or to an intervening water column.

**PG−60.3.2** The lower edge of the steam connection to a water column or gage glass and the boiler shall not be below the highest visible water level in the water gage glass. There shall be no sag or offset in the piping which will permit the accumulation of water.

**PG−60.3.3** The upper edge of the water connection to a water column or gage glass and the boiler shall not be above the lowest visible water level in the gage glass. No part of this pipe connection shall be above the point of connection at the water column.

**PG−60.3.4** Connections from the boiler to the water column shall be at least NPS 1. Connections for gage glasses connected directly to the boiler shall be at least NPS 1/2. Connections from the boiler to the remote level indicator shall be at least NPS 3/4 to and including the isolation valve and from there to the remote level indicator at least 1/2 in. O.D. tubing. These connections shall be completely independent of other connections for any function other than water level indication.

**PG−60.3.5** For pressures of 400 psi or over, lower connections to drums for water columns and remote level indicators shall be provided with shields, sleeves, or other suitable means to reduce the effect of temperature differentials in the shells or heads.

**PG−60.3.6** The steam and water connections to a water column or a water gage glass shall be such that they are readily accessible for internal inspection and cleaning. Some acceptable methods of meeting this requirement are by providing a cross or fitting with a back outlet at each right−angle turn to permit inspection and cleaning in both directions, or by using pipe bends or fittings of a type which does not leave an internal shoulder or pocket in the pipe connection and with a radius of curvature which will permit the passage of a rotary cleaner. Screwed plug closures using threaded connections as allowed by PG−39.5.3 are acceptable means of access for this inspection and cleaning. For boilers with all drum safety valves set at or above 400 psig, socket−welded plugs may be used for this purpose in lieu of screwed plugs. If the water connection to the water column has a rising bend or pocket which cannot be drained by means of the water−column drain, an additional drain shall be placed on this connection in order that it may be blown off to clear any sediment from the pipe.

**PG−60.3.7** Shutoff valves shall not be used in the pipe connections between a boiler and a water column or between a boiler and the shutoff valves required for the gage glass (PG−60.1.6), unless they are either outside−screw−and−yoke or lever−lifting type gate valves or stopcocks with lever permanently fastened thereto and marked in line with their passage, or of such other through−flow construction as to prevent stoppage by deposits of sediment, and to indicate by the position of the operating mechanism whether they are in open or closed position; and such valves or cocks shall be locked or sealed open. Where stopcocks are used they shall be of a type with the plug held in place by a guard or gland.

The lock or seal open requirement may be waived if the following additional conditions are met.

(1) MAWP shall not exceed 250 psig.

(2) The boiler shall not be hand fired or fired with solid fuel not in suspension.

(3) Interlocks between the valve and the burner control system shall stop fuel supply and prevent firing whenever the valve between the drum and the water column is not in the fully open position.

(4) Provision shall be made in the valve body to permit cleaning and rodding of horizontal and vertical legs of attached pipe when the boiler is out of service.

(5) The minimum valve size shall be NPS 1.

(6) The valve shall indicate by its position whether it is open or closed.

**PG−60.3.8** No outlet connections, except for control devices (such as damper regulators and feedwater regulators), drains, steam gages, or apparatus of such form as does not permit the escape of an appreciable amount of steam or water therefrom shall be placed on the piping connecting a water column or gage glass to a boiler.

**PG−60.3.9** An acceptable arrangement is shown in Fig. PG−60.

Removed by Register October 2005 No. 598. For current adm. code see: http://docs.legis.wisconsin.gov/code/admin_code.



**PG−60.4 Gage Cocks.** Not required.

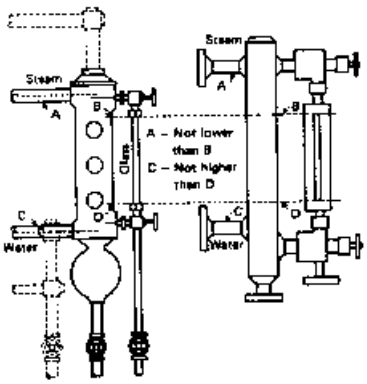


FIG. PG−60 TYPICAL ARRANGEMENT OF STEAM AND WATER CONNECTIONS FOR A WATER COLUMN

**PG−60.5 Water Fronts.** Each boiler fitted with a water jacketed boiler−furnace mouth protector, or similar appliance having valves on the pipes connecting them to the boiler shall have these valves locked or sealed open. Such valves, when used, shall be of the straightway type.

**PG−60.6 Pressure Gages**

**PG−60.6.1** Each boiler shall have a pressure gage so located that it is easily readable. The pressure gage shall be installed so that it shall at all times indicate the pressure in the boiler. Each steam boiler shall have the pressure gage connected to the steam space or to the water column or its steam connection. A valve or cock shall be placed in the gage connection adjacent to the gage. An additional valve or cock may be located near the boiler providing it is locked or sealed in the open position. No other shutoff valves shall be located between the gage and the boiler. The pipe connection shall be of ample size and arranged so that it may be cleared by blowing out. For a steam boiler the gage or connection shall contain a syphon or equivalent device which will develop and maintain a water seal that will prevent steam from entering the gage tube. Pressure gage connections shall be suitable for the maximum allowable working pressure and temperature, but if the temperature exceeds 406°F, brass or copper pipe or tubing shall not be used. The connections to the boiler, except the syphon, if used, shall not be less than NPS 1/4 but where steel or wrought iron pipe or tubing is used, they shall not be less than 1/2 in. inside diameter. The minimum size of a syphon, if used, shall be 1/4 in. inside diameter. The dial of the pressure gage shall be graduated to approximately double the pressure at which the safety valve is set, but in no case to less than 1−1/2 times this pressure.

**PG−60.6.2** Each forced−flow steam generator with no fixed steam and waterline shall be equipped with pressure gages or other pressure measuring devices located as follows:

**PG−60.6.2.1** At the boiler or superheater outlet (following the last section which involves absorption of heat), and

**PG−60.6.2.2** At the boiler or economizer inlet (preceding any section which involves absorption of heat), and

**PG−60.6.2.3** Upstream of any shutoff valve which may be used between any two sections of the heat absorbing surface.

**PG−60.6.3** Each boiler shall be provided with a valve connection at least NPS l/4 for the exclusive purpose of attaching a test gage when the boiler is in service, so that the accuracy of the boiler pressure gage can be ascertained.

**PG−60.6.4** Each high−temperature water boiler shall have a temperature gage so located and connected that it shall be easily readable. The temperature gage shall be installed so that it at all times indicates the temperature in degrees Fahrenheit of the water in the boiler, at or near the outlet connection.

**PG−61 FEEDWATER SUPPLY**

**PG−61.1** Except as provided for in PG−61.2 and PG−61.4, boilers having more than 500 sq ft of water−heating surface shall have at least two means of feeding water. Except as provided for in PG−61.3, PG−61.4, and 61.5, each source of feeding shall be capable of supplying water to the boiler at a pressure of 3% higher than the highest setting of any safety valve on the boiler. For boilers that are fired with solid fuel not in suspension, and for boilers whose setting or heat source can continue to supply sufficient heat to cause damage to the boiler if the feed supply is interrupted, one such means of feeding shall not be susceptible to the same interruption as the other, and each shall provide sufficient water to prevent damage to the boiler.

**PG−61.2** Except as provided for in PG−61.1, a boiler fired by gaseous, liquid, or solid fuel in suspension may be equipped with a single means of feeding water provided means are furnished for the shutting off of its heat input prior to the water level reaching the lowest permissible level established by PG−60.

**PG−61.3** For boilers having a water−heating surface of not more than 100 sq ft the feed connection to the boiler shall not be smaller than NPS 1/2. For boilers having a water−heating surface more than 100 sq ft the feed connection to the boiler shall not be less than NPS 3/4.

**PG−61.4** High−temperature water boilers shall be provided with means of adding water to the boiler or system while under pressure.

**PG−61.5** A forced−flow steam generator with no fixed steam and waterline shall be provided with a source of feeding capable of supplying water to the boiler at a pressure not less than the expected maximum sustained pressure at the boiler inlet, as determined by the boiler Manufacturer, corresponding to operation at maximum designed steaming capacity with maximum allowable working pressure at the superheater outlet.

**SAFETY VALVES AND SAFETY RELIEF VALVES**

**PG−67 BOILER SAFETY VALVE REQUIREMENTS**

**PG−67.1** Each boiler shall have at least one safety valve or safety relief valve and if it has more than 500 sq ft of bare tube water−heating surface, or if an electric boiler has a power input more than 1100 kW, it shall have two or more safety valves or safety relief valves. For a boiler with combined bare tube and extended water−heating surface exceeding 500 sq ft, two or more safety valves or safety relief valves are required only if the design steam−generating capacity of the boiler exceeds 4000 lb/hr. Organic fluid vaporizer generators require special consideration as given in Part PVG.

**PG−67.2** The safety valve or safety relief valve capacity for each boiler (except as noted in PG−67.4) shall be such that the

Removed by Register October 2005 No. 598. For current adm. code see: http://docs.legis.wisconsin.gov/code/admin_code.



safety valve or valves will discharge all the steam that can be generated by the boiler without allowing the pressure to rise more than 6% above the highest pressure at which any valve is set and in no case to more than 6% above the maximum allowable working pressure.

**PG−67.2.1** The minimum required relieving capacity of the safety valves or safety relief valves for all types of boilers shall not be less than the maximum designed steaming capacity as determined by the Manufacturer and shall be based on the capacity of all the fuel burning equipment as limited by other boiler functions.

**PG−67.2.2** The minimum required relieving capacity for a waste heat boiler shall be determined by the Manufacturer. When auxiliary firing is to be used in combination with waste heat recovery, the maximum output as determined by the boiler Manufacturer shall include the effect of such firing in the total required capacity. When auxiliary firing is to be used in place of waste heat recovery, the minimum required relieving capacity shall be based on auxiliary firing or waste heat recovery, whichever is higher.

**PG−67.2.3** The minimum required relieving capacity for electric boilers shall be in accordance with PEB−15.

**PG−67.2.4** The minimum required relieving capacity, in lb/hr, for a high−temperature water boiler shall be determined by dividing the maximum output in Btu/hr at the boiler nozzle, produced by the highest heating value fuel for which the boiler is designed, by 1000.

**PG−67.2.5** The minimum required relieving capacity for organic fluid vaporizers shall be in accordance with PVG−12.

**PG−67.2.6** Any economizer which may be shut off from the boiler, thereby permitting the economizer to become a fired pressure vessel, shall have one or more safety relief valves with a total discharge capacity, in lbs/hr, calculated from the maximum expected heat absorption in Btu/hr., as determined by the Manufacturer, divided by 1000. This absorption shall be stated in the stamping (PG−106.4).

**PG−67.3** One or more safety valves on the boiler proper shall be set at or below the maximum allowable working pressure (except as noted in (PG−67.4). If additional valves are used the highest pressure setting shall not exceed the maximum allowable working pressure by more than 3%. The complete range of pressure settings of all the saturated−steam safety valves on a boiler shall not exceed 10% of the highest pressure to which any valve is set. Pressure setting of safety relief valves on high−temperature waters boilers may exceed this 10% range.

**PG−67.4** For a forced−flow steam generator with no fixed steam and waterline, equipped with automatic controls and protective interlocks responsive to steam pressure, safety valves may be provided in accordance with the above paragraphs or the following protection against overpressure shall be provided:

**PG−67.4.1** One or more power−actuated pressure relieving valves shall be provided in direct communication with the boiler when the boiler is under pressure and shall receive a control impulse to open when the maximum allowable working pressure at the superheater outlet, as shown in the master stamping (PG−106.3), is exceeded. The total combined relieving capacity of the power−actuated relieving valves shall be not less than 10% of the maximum design steaming capacity of the boiler under any operating condition as determined by the Manufacturer. The valve or valves shall be located in the pressure part system where they will relieve the overpressure.

An isolating stop valve of the outside−screw−and−yoke type may be installed between the power−actuated pressure relieving valve and the boiler to permit repairs provided an alternate power−actuated pressure relieving valve of the same capacity is so installed as to be in direct communication with the boiler in accordance with the requirements of this paragraph.

Power−actuated pressure relieving valves discharging to intermediate pressure and incorporated into bypass and/or startup circuits by the boiler Manufacturer need not be capacity certified. Instead, they shall be marked by the valve manufacturer with a capacity rating at a set of specified inlet pressure and temperature conditions. Power−actuated pressure relieving valves discharging directly to atmosphere shall be capacity certified. This capacity certification shall be conducted in accordance with the provisions of PG−69.3. The valves shall be marked in accordance with the provisions of PG−69.4 and PG−69.5.

**PG−67.4.2** Spring−loaded safety valves shall be provided, having a total combined relieving capacity, including that of the power−actuated pressure relieving capacity installed under PG−67.4.1, of not less than 100% of the maximum designed steaming capacity of the boiler, as determined by the Manufacturer, except the alternate provisions of PG−67.4.3 are satisfied. In this total, no credit in excess of 30% of the total required relieving capacity shall be allowed for the power−actuated pressure relieving valves actually installed. Any or all of the spring−loaded safety valves may be set above the maximum allowable working pressure of the parts to which they are connected, but the set pressure shall be such that when all of these valves (together with the power−actuated pressure relieving valves) are in operation the pressure will not rise more than 20% above the maximum allowable working pressure of any part of the boiler, except for the steam piping between the boiler and the prime mover.

**PG−67.4.3** The total installed capacity of spring−loaded safety valves may be less than the requirements of PG−67.4.2 provided all of the following conditions are met.

**PG−67.4.3.1** The boiler shall be of no less steaming capacity than 1,000,000 lb/hr and installed in a unit system for power generation (i.e., a single boiler supplying a single turbine−generator unit).

**PG−67.4.3.2** The boiler shall be provided with automatic devices, responsive to variations in steam pressure, which include no less than all the following:

**PG−67.4.3.2.1** A control capable of maintaining steam pressure at the desired operating level and of modulating firing rates and feedwater flow in proportion to a variable steam output; and

**PG−67.4.3.2.2** A control which overrides PG−67.4.3.2.1 by reducing the fuel rate and feedwater flow when the steam pressure exceeds the maximum allowable working pressure as shown in the master stamping (PG−106.3) by 10%; and

Removed by Register October 2005 No. 598. For current adm. code see: http://docs.legis.wisconsin.gov/code/admin_code.



**PG−67.4.3.2.3** A direct−acting overpressure−trip−actuating mechanism, using an independent pressure sensing device, that will stop the flow of fuel and feedwater to the boiler, at a pressure higher than the set pressure of PG−67.4.3.2.2, but less than 20% above the maximum allowable working pressure as shown in the master stamping (PG−106.3).

**PG−67.4.3.3** There shall be not less than two spring−loaded safety valves and the total rated relieving capacity of the spring−loaded safety valves shall be not less than 10% of the maximum designed steaming capacity of the boiler as determined by the Manufacturer. These spring−loaded safety valves may be set above the maximum allowable working pressure of the parts to which they are connected but shall be set such that the valves will lift at a pressure no higher than 20% above the maximum allowable working pressure as shown in the master stamping (PG−106.3).

**PG−67.4.3.4** At least two of these spring−loaded safety valves shall be equipped with a device that directly transmits the valve stem lift action to controls that will stop the flow of fuel and feedwater to the boiler. The control circuitry to accomplish this shall be arranged in a ”fail−safe” manner (see Note).

**Note:** “Fail−safe” shall mean a circuitry arranged as either of the following:

(1) *Energize to trip:* There shall be at least two separate and independent trip circuits served by two power sources, to initiate and perform the trip action. One power source shall be a continuously charged dc battery. The second source shall be an ac−to−dc converter connected to the dc system to charge the battery and capable of performing the trip action. The trip circuits shall be continuously monitored for availability.

It is not mandatory to duplicate the mechanism that actually stops the flow of fuel and feedwater.

(2) *De−energize to trip:* If the circuits are arranged in such a way that a continuous supply of power is required to keep the circuits closed and operating and such that any interruption of power supply will actuate the trip mechanism, then a single trip circuit and single power supply will be enough to meet the requirements of this subparagraph.

**PG−67.4.3.5** The power supply for all controls and devices required by PG−67.4.3 shall include at least one source contained within the same plant as the boiler and which is arranged to actuate the controls and devices continuously in the event of failure or interruption of any other power sources.

**PG−67.4.4** When stop valves are installed in the water−steam flow path between any two sections of a forced−flow steam generator with no fixed steam and waterline:

**PG−67.4.4.1** The power−actuated pressure relieving valve(s) required by PG−67.4.1 shall also receive a control impulse to open when the maximum allowable working pressure of the component, having the lowest pressure level upstream to the stop valve, is exceeded; and

**PG−67.4.4.2** The spring−loaded safety valves shall be located to provide the pressure protection requirements in PG−67.4.2 or PG−67.4.3.

**PG−67.4.5** A reliable pressure−recording device shall always be in service and records kept to provide evidence of conformity to the above requirements.

**PG−67.5** All safety valves or safety relief valves shall be so constructed that the failure of any part cannot obstruct the free and full discharge of steam and water from the valve. Safety valves shall be of the direct spring−loaded pop type, with seat inclined at any angle between 45 and 90 degrees, inclusive, to the center line of the spindle. The coefficient of discharge of safety valves shall be determined by actual steam flow measurements at a pressure not more than 3% above the pressure at which the valve is set to blow and when adjusted for blowdown in accordance with PG−72. The valves shall be credited with capacities as determined by the provisions of PG−69.2.

Safety valves or safety relief valves may be used which give any opening up to the full discharge capacity of the area of the opening of the inlet of the valve (see PG−69.5), provided the movement of the steam safety valve is such as not to induce lifting of water in the boiler.

Deadweight or weighted lever safety valves or safety relief valves shall not be used.

For high−temperature water boilers safety relief valves shall be used. Such valves shall have a closed bonnet. For purposes of selection the capacity rating of such safety relief valves shall be expressed in terms of actual steam flow determined on the same basis as for safety valves. In addition the safety relief valves shall be capable of satisfactory operation when relieving water at the saturation temperature corresponding to the pressure at which the valve is set to blow.

**PG−67.6** A safety valve or safety relief valve over NPS 3, used for pressures greater than 15 psig, shall have a flanged inlet connection or a weld−end inlet connection. The dimensions of flanges subjected to boiler pressure shall conform to the applicable American National Standards as given in PG−42. The facing shall be similar to those illustrated in the Standard.

**PG−67.7** Safety valves or safety relief valves may have bronze parts complying with either SB−61 or SB−62, provided the maximum allowable stresses and temperature do not exceed the values given in Table 1B of Section II, Part D, and shall be marked to indicate the class of material used. Such valves shall not be used on superheaters delivering steam at a temperature over 450°F and 306°F respectively, and shall not be used for high−temperature water boilers.

## PG−68 SUPERHEATER AND REHEATER SAFETY−VALVE REQUIREMENTS

**PG−68.1** Except as permitted in PG−58.3.1, every attached superheater shall have one or more safety valves in the steam flow path between the superheater outlet and the first stop valve. The location shall be suitable for the service intended and shall provide the overpressure protection required. The pressure drop up−stream of each safety valve shall be considered in the determination of set pressure and relieving capacity of that valve. If the superheater outlet header has a full, free steam passage from end to end and is so constructed that steam is supplied to it at practically equal intervals throughout its length so that there is a uniform flow of steam through the superheater tubes and the header, the safety valve, or valves, may be located anywhere in the length of the header.

**PG−68.2** The discharge capacity of the safety valve, or valves, on an attached superheater may be included in determining the number and size of the safety valves for the boiler, provided there are no intervening valves between the superheater safety valve and the boiler, and provided the discharge capacity of the safety valve, or valves, on the boiler, as distinct from the

Removed by Register October 2005 No. 598. For current adm. code see: http://docs.legis.wisconsin.gov/code/admin_code.



superheater is at least 75% of the aggregate valve capacity required.

**PG−68.3** Every separately fired superheater which may be shut off from the boiler and permit the superheater to become a fired pressure vessel shall have one or more safety valves having a discharge capacity equal to 6 lbs. of steam per hour per square foot of superheater surface measured on the side exposed to the hot gases. As an alternative the Manufacturer may also calculate the minimum safety valve discharge capacity in lbs. of steam per hour from the maximum expected heat absorption (as determined by the Manufacturer) in Btu/hr, divided by 1,000. In the case of electrically heated superheaters, the safety valve capacity shall be based upon 3½ lb/hr/kW input. The number of safety valves installed shall be such that the total capacity is at least equal to that required.

**PG−68.4** Every reheater shall have one or more safety valves, such that the total relieving capacity is at least equal to the maximum steam flow for which the heater is designed. The capacity of the reheater safety valves shall not be included in the required relieving capacity for the boiler and superheater.

One or more valves with a combined relieving capacity not less than 15% of the required total shall be located along the steam flow path between the reheater outlet and the first stop valve. The pressure drop upstream of the valves on the outlet side of the reheater shall be considered in determining their set pressure.

**PG−68.5** A soot blower connection may be attached to the same outlet from the superheater or reheater that is used for the safety valve connection.

**PG−68.6** Every safety valve used on a superheater or reheater discharging superheated steam at a temperature over 450°F shall have a casing, including the base, body, and bonnet and spindle, of steel, steel alloy, or equivalent heat−resisting material.

The valve shall have a flanged inlet connection, or a weld−end inlet connection. It shall have the seat and disk of suitable heat erosive and corrosive resisting material, and the spring fully exposed outside of the valve casing so that it shall be protected from contact with the escaping steam.

**PG−70 CAPACITY OF SAFETY VALVES**

**PG−70.1** Subject to the minimum number required by PG−67.1, the number of safety valves or safety relief valves required shall be determined on the basis of the maximum designed steaming capacity, as determined by the boiler manufacturer, and the relieving capacity marked on the valves by the manufacturer.

**PG−71 MOUNTING**

**PG−71.1** When two or more safety valves are used on a boiler, they may be mounted either separately or as twin valves made by placing individual valves on Y−bases, or duplex valves having two valves in the same body casing. Twin valves made by placing individual valves on Y−bases, or duplex valves having two valves in the same body, shall be of approximately equal capacity.

When not more than two valves of different sizes are mounted singly the relieving capacity of the smaller valve shall be not less than 50% of that of the larger valve.

**PG−71.2** The safety valve or safety relief valve or valves shall be connected to the boiler independent of any other connection, and attached as close as possible to the boiler or the normal steam flow path, without any unnecessary intervening pipe or fitting. Such intervening pipe or fitting shall be not longer than the face−to−face dimension of the corresponding tee fitting of the same diameter and pressure under the applicable American National Standard listed in PG−42 and shall also comply with PG−8 and PG−39. Every safety valve or safety relief valve shall be connected so as to stand in an upright position, with spindle vertical. On high−temperature water boilers of the watertube forced−circulation type, the valve shall be located at the boiler outlet.

**PG−71.3** The opening or connection between the boiler and the safety valve or safety relief valve shall have at least the area of the valve inlet. No valve of any description shall be placed between the required safety valve or safety relief valve or valves and the boiler, nor on the discharge pipe between the safety valve or safety relief valve and the atmosphere. When a discharge pipe is used, the cross−sectional area shall be not less than the full area of the valve outlet or of the total of the areas of the valve outlets, discharging there−into. It shall be as short and straight as possible and so arranged as to avoid undue stresses on the valve or valves.

All safety valve or safety relief valve discharges shall be so located or piped as to be carried clear from running boards or platforms. Ample provision for gravity drain shall be made in the discharge pipe at or near each safety valve or safety relief valve, and where water of condensation may collect. Each valve shall have an open gravity drain through the casing below the level of the valve seat. For iron− and steel−bodied valves exceeding NPS 2½, the drain hole shall be tapped not less than NPS 3/8.

Discharge piping from safety relief valves on high−temperature water boilers shall be provided with adequate provisions for water drainage as well as the steam venting.

The installation of cast iron bodied safety relief valves for high−temperature water boilers is prohibited.

**PG−71.4** If a muffler is used on a safety valve or safety relief valve, it shall have sufficient outlet area to prevent back pressure from interfering with the proper operation and discharge capacity of the valve. The muffler plates or other devices shall be so constructed as to avoid a possibility of restriction of the steam passages due to deposit. Mufflers shall not be used on high−temperature water boiler safety relief valves.

When a safety valve or safety relief valve is exposed to outdoor elements which may affect operation of the valve, it is permissible to shield the valve with a satisfactory cover. The shield or cover shall be properly vented and arranged to permit servicing and normal operation of the valve.

**PG−71.5** When a boiler is fitted with two or more safety valves or safety relief valves on one connection, this connection to the boiler shall have a cross−sectional area not less than the combined areas of inlet connections of all the safety valves or

Removed by Register October 2005 No. 598. For current adm. code see: http://docs.legis.wisconsin.gov/code/admin_code.



safety relief valves with which it connects and shall also meet the requirements of PG−71.3.

**PG−71.6** Safety valves may be attached to drums or headers by welding provided the welding is done in accordance with Code requirements.

**PG−71.7** Every boiler shall have proper outlet connections for the required safety valve, or safety relief valve, or valves, independent of any other outside steam connection, the area of opening to be at least equal to the aggregate areas of inlet connections of all of the safety valves or safety relief valves to be attached thereto. An internal collecting pipe, splash plate, or pan may be used, provided the total area for inlet of steam thereto is not less than twice the aggregate areas of the inlet connections of the attached safety valves. The holes in such collecting pipes shall be at least ¼ in. in diameter and the least dimension in any other form of opening for inlet of steam shall be ¼ in.

Such dimensional limitations to operation for steam need not apply to steam scrubbers or driers provided the net free steam inlet area of the scrubber or drier is at least 10 times the total area of the boiler outlets for the safety valves.

**PG−71.8** If safety valves are attached to a separate steam drum or dome, the opening between the boiler proper and the steam drum or dome shall be not less than required by PG−71.7.

**PG−72 OPERATION**

**PG−72.1** Safety valves shall be designed and constructed to operate without chattering and to attain full lift at a pressure no greater than 3% above their set pressure. After blowing down, all valves set at pressures of 375 psi or greater shall close at a pressure not lower than 96% of their set pressure, except that all drum valves installed on a single boiler may be set to reseat at a pressure not lower than 96% of the set pressure of the lowest set drum valve. All valves set at pressures below 375 psi shall have a blowdown not greater than that specified in the following table:

| Set Pressure, psi | Maximum blowdown |
|---|---|
| < 67 | 4 psi |
| ≥ 67 and ≤ 250 | 6% of set pressure |
| > 250 and < 375 | 15 psi |

The minimum blowdown for all safety or safety relief valves shall be 2 psi or 2% of the set pressure, whichever is greater.

Safety valves used on forced−flow steam generators with no fixed steam and waterline, and safety relief valves used on high−temperature water boilers may be set and adjusted to close after blowing down not more than 10% of the set pressure. The valves for these special uses must be so adjusted and marked by the manufacturer.

**PG−72.2** The popping point tolerance plus or minus shall not exceed that specified in the following table:

| Set Pressure, psi | Tolerance, plus or minus from set pressure |
|---|---|
| ≤ 70 | 2 psi |
| > 70 and ≤ 300 | 3% of set pressure |
| > 300 and ≤ 1000 | 10 psi |
| > 1000 | 1% of set pressure |

**PG−72.3** The spring in a safety valve or safety relief valve shall not be reset for any pressure more than 5% above or below that for which the valve is marked unless the new setting is within the spring design range established by the manufacturer or is determined to be acceptable to the manufacturer.

If the set pressure is to be adjusted within the limits specified above, the adjustment shall be performed by the manufacturer, his authorized representative, or an assembler. An additional valve data tag identifying the new set pressure, capacity, and date shall be furnished and installed, and the valve shall be resealed.

**PG−72.4** If the set pressure of a valve is changed so as to require a new spring, the spring shall be acceptable to the manufacturer. The spring installation and valve adjustment shall be performed by the manufacturer, his authorized representative, or an assembler. A new nameplate as described in PG−110 shall be furnished and installed, and the valve shall be resealed.

FIG. PG-105.1 OFFICIAL SYMBOLS FOR STAMPS TO DENOTE THE AMERICAN SOCIETY OF MECHANICAL ENGINEERS' STANDARD FOR BOILERS

FIG. PG-105.2 OFFICIAL SYMBOL FOR STAMP TO DENOTE THE AMERICAN SOCIETY OF MECHANICAL ENGINEERS' STANDARD FOR ASSEMBLY

FIG. PG-105.3 OFFICIAL SYMBOL FOR STAMP TO DENOTE THE AMERICAN SOCIETY OF MECHANICAL ENGINEERS' STANDARD FOR WELDED PIPING

FIG. PG-105.4 OFFICIAL SYMBOL FOR STAMP TO DENOTE THE AMERICAN SOCIETY OF MECHANICAL ENGINEERS' STANDARD FOR SAFETY VALVES

**PG−105 CODE SYMBOL STAMPS**

**PG−105.1 Authorization.** Except as permitted in PG−105.6, no organization may assume responsibility for Code construction without having first received from the ASME a Certificate of Authorization to use one of the Code symbol stamps shown in Figs. PG−105.1 through PG−105.4. There are six such stamps, defined as follows:

Removed by Register October 2005 No. 598. For current adm. code see: http://docs.legis.wisconsin.gov/code/admin_code.



S − power boiler symbol stamp . . . . . see Fig. PG−105.1
M − miniature boiler symbol stamp . . . see Fig. PG−105.1
E − electric boiler symbol stamp . . . . . see Fig. PG−105.1
A − boiler assembly symbol stamp . . . see Fig. PG−105.2
PP − pressure piping symbol stamp . . . . see Fig. PG−105.3
V − safety valve symbol stamp . . . . . see Fig. PG−105.4

**PG−109 STAMPING OF PRESSURE PIPING**

**PG−109.1** Boiler external piping, as defined in the Preamble, may be fabricated by a manufacturer other than the Manufacturer of the boiler, provided that the manufacturer has been issued a Certificate of Authorization to use the "S" or "PP" symbol stamp. Boiler external piping may be installed by welding by a manufacturer or contractor other than the Manufacturer of the boiler, provided such an organization has been issued a Certificate of Authorization to use the "S", "PP", or "A" symbol stamp. When boiler external piping is installed by welding, the welding, including the qualification of welding procedures, welders, and welding operators, shall be done in accordance with the applicable rules of ASME B31.1. The welding shall be inspected by an Authorized Inspector at such stages of the work as he may elect. The organizations which fabricate or install such piping shall furnish proper code certification (PG−104.2) for it including a Manufacturers' Data Report Form P−4A as required by PG−112.2.5 and PG−112.3.

**PG−109.2** Welded boiler external piping included within the scope of this Code, over NPS 2, shall be stamped with a Code symbol, together with the manufacturer's or contractor's name and serial number. Such stamping shall be on the pipe, valve, or fitting adjacent to the welded joint farthest from the boiler. For piping operating at temperatures above 800°F the symbol may be stamped on a nameplate which is irremovably attached by welding, provided such welding is postweld heat treated, or on a circular metal band at least ¼ in. thick. This band around the pipe shall be secured in such a manner as to prevent it from slipping off during handling and installation.

Welded piping NPS 2 or less included within the scope of this Code shall be marked with an identification acceptable to the Inspector and traceable to the required Data Report. Such marking shall be of a type that will remain visible until the piping has been installed.

**PG−109.3** Parts of boilers, such as superheater, waterwall, or economizer headers, or any construction involving only welding as covered by PW−41, may be fabricated by a manufacturer in possession of the pressure piping symbol stamp, and so stamped and reported on a Manufacturer's Partial Data Report Form (Form P−4) as called for in PG−112.2.4.

**PG−110 STAMPING OF SAFETY VALVES**

Each safety valve shall be plainly marked with the required data by the Manufacturer or Assembler (see PG−73.3.4) in such a way that the marking will not be obliterated in service. The marking shall be placed on the valve or on a nameplate securely fastened to the valve. The Code "V" symbol shall be stamped on the valve or nameplate, but the other required data may be stamped, etched, impressed, or cast on the valve or nameplate. The marking shall include the following:

(1) The name (or an acceptable abbreviation) of the Manufacturer and Assembler;

(2) Manufacturer's design or type number;

(3) NPS (the nominal pipe size of the valve inlet);

(4) set pressure_____psi;

(5) capacity_____lb/hr (in accordance with PG−67.5 and with the valve adjusted for the blowdown permitted by PG−72);

(6) year built, or alternatively, a coding may be marked on the valve such that the valve manufacturer or assembler can identify the year the valve was assembled and tested;

(7) ASME symbol as shown in Fig. PG−105.4.

**PART PFT**
**REQUIREMENTS FOR FIRETUBE BOILERS**

**PFT−1 GENERAL**

The rules in Part PFT are applicable to firetube boilers and parts thereof and shall be used in conjunction with the general requirements in Part PG as well as with the specific requirements in the applicable Parts of this Section which apply to the method of fabrication used.

**PFT−12.2 Attachment of Tubes**

**PFT−12.2.1** Figure PFT−12.1 illustrates some of the acceptable types of tube attachments. Such connections shall be:

(a) expanded and beaded as in sketches (a), (b), and (d);

(b) expanded and beaded and seal welded as in sketch (c);

(c) expanded and seal welded as in sketch (e);

(d) welded, as in sketches (f) and (g).

Tube ends attached by expanding and welding are subject to the following provisions.

**PFT−12.2.1.1** Where no bevel or recess is employed, the tube shall extend beyond the tubesheet not less than a distance equal to the tube thickness or 1/8 in., whichever is the greater, nor more than twice the tube thickness or 1/4 in., whichever is the lesser [see Fig. PFT−12.1, sketch (e)].

**PFT−12.2.1.2** The tubesheet hole may be beveled or recessed. The depth of any bevel or recess shall not be less than the tube thickness or 1/8 in., whichever is greater, nor more than one−third of the tubesheet thickness, except that when tube thicknesses are equal to or greater than 0.150 in., the bevel or recess may exceed T/3. Where the hole is beveled or recessed, the projection of the tube beyond the tubesheet shall not exceed a distance equal to the tube wall thickness [see Fig. PFT−12.1, sketches (f) and (g)].

**PFT−12.2.1.3** On types of welded attachment shown in Fig. PFT−12.1 sketches (c) and (e), the tubes shall be expanded before and after welding. On types shown in sketches (f) and (g), the tubes may be expanded.

Removed by Register October 2005 No. 598. For current adm. code see: http://docs.legis.wisconsin.gov/code/admin_code.



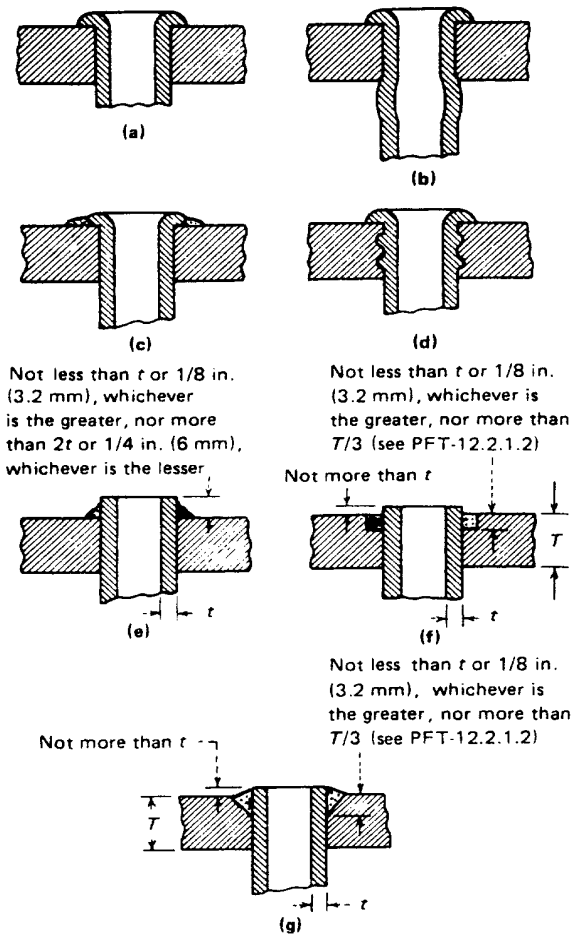


FIG. PFT−12.1 SOME ACCEPTABLE FORMS OF TUBE ATTACHMENT ON FIRETUBE BOILERS

**PFT−12.2.2** Expanding of tubes by the Prosser method may be employed in combination with any beaded or seal welded attachment method [see Fig. PFT−12.1, sketch (b)].

**PFT−12.2.3** After seal welding as shown by Fig. PFT−12.1 sketch (c) and (e), a single hydrostatic test of the boiler shall suffice.

**PFT−12.2.4** The inner surface of the tube hole in any form of attachment may be grooved or chamfered.

**PFT−12.2.5** The sharp edge of tube holes shall be taken off on both sides of the plate with a file or other tool.

**PFT−44 OPENING BETWEEN BOILER AND SAFETY VALVE**

The opening or connection between the boiler and the safety valve shall have at least the area of the valve inlet.

After the boiler Manufacturer provides for the opening required by the Code, a bushing may be inserted in the opening in the shell to suit a safety valve that will have the capacity to relieve all the steam that can be generated in the boiler and which will meet the Code requirements.

No valve of any description shall be placed between the required safety valve or safety relief valve or valves and the boiler, or on the discharge pipe between the safety valve or safety relief valve and the atmosphere. When a discharge pipe is used, the cross−sectional area shall be not less than the full area of the valve outlet or of the total of the areas of the valve outlets discharging there−into and shall be as short and straight as possible and so arranged as to avoid undue stresses on the valve or valves.

## PART PEB
## REQUIREMENTS FOR ELECTRIC BOILERS

**PEB−1 GENERAL**

The rules in Part PEB are applicable to electric boilers and parts thereof and shall be used in conjunction with the general requirements in part PG as well as with the special requirements in the applicable Parts of this Section which apply to the method of fabrication used.

**PEB−2 SCOPE**

**PEB−2.1** This Part contains special rules for construction of electric boilers both of the electrode and immersion resistance element type. This Part does not include electric boilers where the heat is applied to the boiler pressure vessel externally by electric resistance heating elements, induction coils, or other electrical means. These types of electric boilers shall be constructed in accordance with other applicable Parts of this Section.

**PEB−2.2** Electric boilers shall be marked with the ”S” or ”M” symbol (except when the boiler pressure vessel is constructed under the provisions of PEB−3) by the Manufacturer of the boiler pressure vessel. When the trim, fixtures, and fittings such as valves, threaded piping, and appurtenances are connected to the electric boiler by a Manufacturer not authorized to apply the ”S” or ”M” stamps, the boiler assembler shall apply an ”E” stamp to the completed assembly. ”E” stamp holders are limited to the use of assembly methods that do not require welding or brazing.

**PEB−2.3** An electrode type boiler is defined as an electric boiler in which heat is generated by the passage of an electric current using water as a conductor.

**PEB−2.4** An immersion resistance element type boiler is defined as an electric boiler in which heat is generated by the passage of an electric current through a resistance heating element immersed in water.

**PEB−11 FEEDWATER SUPPLY**

**PEB−11.1** The feedwater source to electric boilers shall be capable of meeting the applicable requirements of PG−61.

**PEB−11.2** Feedwater connections to an electric boiler shall not be smaller than NPS ½.

Removed by Register October 2005 No. 598. For current adm. code see: http://docs.legis.wisconsin.gov/code/admin_code.



**PEB−12 BLOWOFF**

**PEB−12.1** The blowoff piping for each electric boiler pressure vessel having a normal water content not exceeding 100 gal is required to extend through only one valve.

**PEB−12.2** The minimum size of blowoff pipes and fittings shall be NPS 1, except that for boilers of 200 kW input or less the minimum size of pipe and fittings may be NPS 3/4.

**PEB−13 WATER GAGES**

**PEB−13.1** Electric boilers of the electrode type shall have at least one water gage glass. The water gage glass shall be located as to indicate the water levels both at startup and under maximum steam load conditions as established by the Manufacturer. No low−water cutoff is required for electrode type boilers.

**PEB−13.2** Electric boilers of the resistance element type shall have at least one water gage glass. The lowest visible part of the water gage shall be located at least 1 in. above the lowest permissible water level specified by the Manufacturer. Each electric boiler of this type shall also be equipped with an automatic low−water cutoff on each boiler pressure vessel so located as to automatically cut off the power supply to the heating elements before the surface of the water falls below the visible part of the glass.

**PEB−13.3** Tubular water glasses on electric boilers shall be equipped with protective rods or shields.

**PEB−15 SAFETY VALVES**

**PEB−15.1** Each electric boiler shall have at least one safety valve or safety relief valve, and if it has a power input more than 1100 kW, it shall have two or more safety valves or safety relief valves.

**PEB−15.2** The minimum safety valve or safety relief valve relieving capacity for electric boilers shall be 3½ lb/hr/kW input.

**PEB−16 AUTOMATIC DEVICES**

**PEB−16.1** Electric boilers shall be provided with pressure and/or temperature controls.

Removed by Register October 2005 No. 598. For current adm. code see: http://docs.legis.wisconsin.gov/code/admin_code.



# EXCERPTS FROM:
# ASME BOILER AND PRESSURE VESSEL CODE
# SECTION IV
# HEATING BOILERS
# 1998 EDITION

## PREAMBLE

The rules of this Section of the Code cover minimum construction requirements for the design, fabrication, installation, and inspection of steam heating, hot water heating, hot water supply boilers which are directly fired with oil, gas, electricity, coal, or other solid or liquid fuels, and for operation at or below the pressure and temperature limits set forth in this document. Similar rules for potable water heaters are also included.

For Section IV application, the boiler proper or other vessels terminate at:

(a) the first circumferential joint for welding end connections;

(b) the face of the first flange in bolted flanged connections; or

(c) the first threaded joint in that type of connection.

The rules are divided into four major Parts: Part HG, applying to all materials of construction except as provided for in Part HLW; Part HF, applying to assemblies fabricated of wrought material, except as provided for in Part HLW; Part HC, applying to cast iron assemblies; and Part HLW, applying to potable water heaters. Part HF is further subdivided into Subpart HW, containing rules for welded construction, and Subpart HB, containing rules for brazed construction.

The Parts and Subparts of this Section are divided into Articles. Each Article is given a number and a title, as for example, Part HG, Article 3, Design. Articles are divided into paragraphs which are given a three−digit number, the first of which corresponds to the Article number, thus, under Article 3 of Part HG will be found paragraph HG−307. Paragraphs are further subdivided into subparagraphs. Major subdivisions of paragraphs are designated by three− or four−digit numbers followed by a decimal point and a digit or digits. Where necessary, further subdivisions are represented by letters and then by numbers in parentheses. Minor subdivisions of the paragraphs are also represented by letters. A reference to one of these paragraphs in the text of the Section includes all of the applicable rules in that paragraph. Thus, reference to HG−307 includes all the rules in HG−307.1 through HG−307.4.

This section does not contain rules to cover all possible details of design and construction. Where complete details are not given, it is intended that the manufacturer, subject to the acceptance of the Authorized Inspector, shall provide details of design and construction which will be as safe as otherwise required by these rules.

When the strength of any part cannot be computed with a satisfactory assurance of safety, these rules provide procedures for establishing its maximum allowable working pressure.

### ARTICLE 1
### SCOPE AND SERVICE RESTRICTIONS

#### HG−100 SCOPE

(a) The rules of Part HG apply to steam heating boilers, hot water heating boilers, hot water supply boilers, and to appurtenances thereto. They shall be used in conjunction with the specific requirements in Part HF, Boilers of Wrought Materials, and Part HC, Cast Iron Boilers, whichever is applicable. The forward provides the basis for these rules. Part HG is not intended to apply to potable water heaters except as provided for in Part HLW.

(b) This Part contains mandatory requirements, specific prohibitions, and nonmandatory guidance for materials, designs, fabrication, examination, inspection, testing, certification, and pressure relief.

(c) Laws or regulations issued by a municipality, state, provincial, federal, or other enforcement or regulatory body having jurisdiction at the location of an installation, establish the mandatory applicability of these rules, in whole or in part.

#### HG−101 SERVICE RESTRICTIONS

**HG−101.1 Service Restrictions.** The rules of this Section are restricted to the following services:

(a) steam boilers for operation at pressures not exceeding 15 psi;

(b) hot water heating boilers and hot water supply boilers for operating at pressures not exceeding 160 psi and/or temperatures not exceeding 250°F, at or near the boiler outlet, except that when some of the wrought materials permitted by Part HF are used, a lower temperature is specified.

**HG−101.2 Services in Excess of Those Covered by This Section.** For services exceeding the limits specified in HG−101.1, the rules of Section I shall apply.

### ARTICLE 4
### PRESSURE RELIEVING DEVICES

#### HG−400 PRESSURE RELIEVING VALVE REQUIREMENTS

**HG−400.1 Safety Valve Requirements for Steam Boilers**

(a) Each steam boiler shall have one or more officially rated safety valves that are identified with the V or HV symbol of the spring pop type adjusted and sealed to discharge at a pressure not to exceed 15 psi.

(b) No safety valve for a steam boiler shall be smaller than NPS ½. No safety valve shall be larger than NPS 4½. The inlet opening shall have an inside diameter equal to, or greater than, the seat diameter.

Removed by Register October 2005 No. 598. For current adm. code see: http://docs.legis.wisconsin.gov/code/admin_code.



(c) The minimum relieving capacity of valve or valves shall be governed by the capacity marking on the boiler called for in HG−530.

(d) The minimum valve capacity in pounds per hour shall be the greater of that determined by dividing the maximum Btu output at the boiler nozzle obtained by the firing of any fuel for which the unit is installed by 1000, or shall be determined on the basis of the pounds of steam generated per hour per square foot of boiler heating surface as given in Table HG−400.1. For cast iron boilers constructed to the requirements of Part HC, the minimum valve capacity shall be determined by the maximum output method. In many cases a greater relieving capacity of valves will have to be provided than the minimum specified by these rules. In every case, the requirement of HG−400.1(e) shall be met.

(e) The safety valve capacity for each steam boiler shall be such that with the fuel burning equipment installed, and operated at maximum capacity, the pressure cannot rise more than 5 psi above the maximum allowable working pressure.

(f) When operating conditions are changed, or additional boiler heating surface is installed, the valve capacity shall be increased, if necessary, to meet the new conditions and be in accordance with HG−400.1(e). The additional valves required, on account of changed conditions, may be installed on the outlet piping provided there is no intervening valve.

TABLE HG−400.1
MINIMUM POUNDS OF STEAM PER HOUR
PER SQUARE FOOT OF HEATING SURFACE

| | Firetube Boilers | Watertube Boilers |
|---|---|---|
| Boiler heating surface: | | |
| Hand fired | 5 | 6 |
| Stoker fired | 7 | 8 |
| Oil, gas or pulverized fuel fired | 8 | 10 |
| Waterwall heating surface: | | |
| Hand fired | 8 | 8 |
| Stoker fired | 10 | 12 |
| Oil, gas or pulverized fuel fired | 14 | 16 |

GENERAL NOTES:

(a) When a boiler is fired only by a gas having a heat value not in excess of 200 Btu/cu ft, the minimum safety valves or safety relief valve relieving capacity may be based on the values given for hand fired boilers above.

(b) The minimum safety valve or safety relief valve relieving capacity for electric boilers shall be 3½ lb/hr/kw input.

(c) For heating surface determination, see HG−403.

**HG−400.2 Safety Relief Valve Requirements for Hot Water Boilers**

(a) Each hot water heating or supply boiler shall have at least one officially rated safety relief valve, of the automatic reseating type, identified with the V or HV Symbol, and set to relieve at or below the maximum allowable working pressure of the boiler.

(b) Hot water heating or supply boilers limited to a water temperature not in excess of 250°F may have, in lieu of the valve(s) specified in (a) above, one or more officially rated temperature and pressure safety relief valves of the automatic reseating type identified with the HV symbol, and set to relieve at or below the maximum allowable working pressure of the boiler.

(c) When more than one safety relief valve is used on either hot water heating or hot water supply boilers, the additional valves shall be officially rated and may have a set pressure within a range not to exceed 6 psi above the maximum allowable working pressure of the boiler up to and including 60 psi, and 5% for those having a maximum allowable working pressure exceeding 60 psi. Safety relief valves shall be spring loaded. Safety relief valves shall be set and sealed so that they cannot be reset without breaking the seal.

(d) No safety relief valve shall be smaller than NPS 3/4 nor larger than NPS 4½ except that boilers having a heat input not greater than 15,000 Btu/hr may be equipped with a rated safety relief valve of NPS ½.

(e) The required steam relieving capacity, in pounds per hour, of the pressure relieving device or devices on a boiler shall be the greater of that determined by dividing the maximum output in Btu at the boiler nozzle obtained by the firing of any fuel for which the unit is installed by 1000, or shall be determined on the basis of pounds of steam generated per hour per square foot of boiler heating surface as given in Table HG−400.1. For cast iron boilers constructed to the requirements of Part HC, the minimum valve capacity shall be determined by the maximum output method. In many cases a greater relieving capacity of valves will have to be provided than the minimum specified by these rules. In every case, the requirements of HG−400.2(g) shall be met.

(f) When operating conditions are changed, or additional boiler heating surface is installed, the valve capacity shall be increased, if necessary, to meet the new conditions and shall be in accordance with HG−400.2(g). The additional valves required, on account of changed conditions, may be installed on the outlet piping provided there is no intervening valve.

(g) Safety relief valve capacity for each boiler with a single safety relief valve shall be such that, with the fuel burning equipment installed and operated at maximum capacity, the pressure cannot rise more than 10% above the maximum allowable working pressure. When more than one safety relief valve is used, the overpressure shall be limited to 10% above the set pressure of the highest set valve allowed by HG−400.2(a).

**HG−400.3 Safety and Safety Relief Valves for Tanks and Heat Exchangers**

(a) *Steam to Hot Water Supply.* When a hot water supply is heated indirectly by steam in a coil or pipe within the service limitations set forth in HG−101, the pressure of the steam used shall not exceed the safe working pressure of the hot water tank, and a safety relief valve at least NPS 1, set to relieve at or below the maximum allowable working pressure of the tank, shall be applied on the tank.

(b) *High Temperature Water to Water Heat Exchanger.* When high temperature water is circulated through the coils or tubes of a heat exchanger to warm water for space heating or hot water supply, within the service limitations set forth in HG−101, the heat exchanger shall be equipped with one or more officially rated safety relief valves that are identified with the V or HV Symbol, set to relieve at or below the maximum allowable work-

Removed by Register October 2005 No. 598. For current adm. code see: http://docs.legis.wisconsin.gov/code/admin_code.



ing pressure of the heat exchanger, and of sufficient rated capacity to prevent the heat exchanger pressure from rising more than 10% above the maximum allowable working pressure of the vessel.

(c) *High Temperature Water to Steam Heat Exchanger.* When high temperature water is circulated through the coils or tubes of a heat exchanger to generate low pressure steam, within the service limitations set forth in HG−101, the heat exchanger shall be equipped with one or more officially rated safety valves that are identified with the V or HV Symbol, set to relieve at a pressure not to exceed 15 psi, and of sufficient rated capacity to prevent the heat exchanger pressure from rising more than 5 psi above the maximum allowable working pressure of the vessel. For heat exchangers requiring steam pressures greater than 15 psi, refer to Section I or Section VIII, Division 1.

**HG−402 DISCHARGE CAPACITIES OF SAFETY AND SAFETY RELIEF VALVES**

**HG−402.1 Valve Markings.** Each safety or safety relief valve shall be plainly marked with the required data by the Manufacturer in such a way that the markings will not be obliterated in service. The markings shall be stamped, etched, impressed, or cast on the valve or on a nameplate which shall be securely fastened to the valve. The markings shall include the following:

(a) the name or an acceptable abbreviation of the Manufacturer;

(b) Manufacturer's design or type number;

(c) NPS size _____in. (the nominal pipe size of the valve inlet);

(d) set pressure _____psi;

(e) capacity _____lb/hr, or capacity _____Btu/hr in accordance with HG−402.3;

(f) year built or, alternatively, a coding may be marked on the valves such that the valve Manufacturer can identify the year the valve was assembled and tested;

(g) ASME Symbol as shown in Fig. HG−402.

**HG−402.2 Authorization to Use ASME Stamp.** Each safety valve to which the Code Symbol (Fig. HG−402) is to be applied shall be produced by a Manufacturer and/or Assembler who is in possession of a valid Certificate of Authorization. (See HG−540.))

FIG. HG−402 OFFICIAL SYMBOL FOR STAMP TO DENOTE THE AMERICAN SOCIETY OF MECHANICAL ENGINEERS' STANDARD

**ARTICLE 6**
**INSTRUMENTS, FITTINGS, AND CONTROLS**

**HG−600 GENERAL**

All instruments, fittings, and controls described in this Article shall be installed prior to operation.

**HG−601 FOR STEAM HEATING BOILERS**

**HG−602 STEAM GAGES**

(a) Each steam boiler shall have a steam gage or a compound steam gage connected to its steam space or to its water column or to its steam connection. The gage or piping to the gage shall contain a siphon or equivalent device which will develop and maintain a water seal that will prevent steam from entering the gage tube. The piping shall be so arranged that the gage cannot be shut off from the boiler except by a cock placed in the pipe at the gage and provided with a tee− or lever−handle arranged to be parallel to the pipe in which it is located when the cock is open. The gage connection boiler tapping, external siphon, or piping to the boiler shall be not less than NPS ¼. Where steel or wrought iron pipe or tubing is used, the boiler connection and external siphon shall be not less than NPS ½. Ferrous and nonferrous tubing having inside diameters at least equal to that of standard pipe sizes listed above may be substituted for pipe.

(b) The scale on the dial of a steam boiler gage shall be graduated to not less than 30 psi nor more than 60 psi. The travel of the pointer from 0 psi to 30 psi pressure shall be at least 3 in.

**HG−603 WATER GAGE GLASSES**

(a) Each steam boiler shall have one or more water gage glasses attached to the water column or boiler by means of valved fittings not less than NPS ½, with the lower fitting provided with a drain valve of a type having an unrestricted drain opening not less than ¼ in. in diameter to facilitate cleaning. Gage glass replacement shall be possible under pressure. Water glass fittings may be attached directly to a boiler.

Boilers having an internal vertical height of less than 10 in. may be equipped with a water level indicator of the Glass Bull's−Eye type provided the indicator is of sufficient size to show the water at both normal operating and low−water cutoff levels.

(b) The lowest visible part of the water gage glass shall be at least 1 in. above the lowest permissible water level recommended by the boiler Manufacturer. With the boiler operating a this lowest permissible water level, there shall be no danger of overheating any part of the boiler.

Each boiler shall be provided at the time of the manufacture with a permanent marker indicating the lowest permissible water level. The marker shall be stamped, etched, or cast in metal; or it shall be a metallic plate attached by rivets, screws, or welding; or it shall consist of material with documented tests showing its suitability as a permanent marking for the application. This marker shall be visible at all times. Where the boiler is shipped with a jacket, this marker may be located on the jacket.

**Note:** Transparent material other than glass may be used for the water gage provided that the material will remain transparent and has proved suitable for the pressure, temperature, and corrosive conditions expected in service.

(c) In electric boilers of the submerged electrode type, the water gage glass shall be so located to indicate the water levels both at startup and under maximum steam load conditions as established by the Manufacturer.

(d) In electric boilers of the resistance element type, the lowest visible part of the water gage shall be located at least 1 in. above the lowest permissible water level specified by the Manufacturer. Each electric boiler of this type shall also be equipped with an automatic low−water cutoff on each boiler pressure vessel so located as to automatically cut off the power

Removed by Register October 2005 No. 598. For current adm. code see: http://docs.legis.wisconsin.gov/code/admin_code.



supply to the heating elements before the surface of the water falls below the visible part of the glass.

(e) Tubular water glasses on electric boilers having a normal water content not exceeding 100 gal shall be equipped with a protective shield.

**HG−604 WATER COLUMN AND WATER LEVEL CONTROL PIPES**

(a) The minimum size of ferrous or nonferrous pipes connecting a water column to a steam boiler shall be 1 in. No outlet connections, except for damper regulator, feedwater regulator, steam gages, or apparatus which does not permit the escape of any steam or water except for manually operated blowdowns, shall be attached to a water column or the piping connecting a water column to a boiler (see HG−705 for introduction of feedwater into a boiler). If the water column, gage glass, low−water fuel cutoff, or other water level control device is connected to the boiler by pipe and fittings, no shutoff valves of any type shall be placed in such pipe, and a cross or equivalent fitting to which a drain valve and piping may be attached shall be placed in the water piping connection at every right angle turn to facilitate cleaning. The water column drain pipe and valve shall be not less than NPS 3/4.

(b) The steam connections to the water column of a horizontal firetube wrought boiler shall be taken from the top of the shell or the upper part of the head, and the water connection shall be taken from a point not above the center line of the shell. For a cast iron boiler, the steam connection to the water column shall be taken from the top of an end section or the top of the steam header, and the water connection shall be made on an end section not less than 6 in. below the bottom connection to the water gage glass.

**HG−605 PRESSURE CONTROL**

Each automatically fired steam boiler shall be protected from overpressure by two pressure−operated controls.

(a) Each individual automatically fired steam boiler shall have a safety limit control that will cut off the fuel supply to prevent steam pressure from exceeding the 15 psi maximum allowable working pressure of the boiler. Each control shall be constructed to prevent a pressure setting above 15 psi.

(b) Each individual steam boiler or each system of commonly connected steam boilers shall have a control that will cut off the fuel supply when the pressure reaches an operating limit, which shall be less than the maximum allowable pressure.

(c) Shutoff valves of any type shall not be placed in the steam pressure connection between the boiler and the controls described in (a) and (b) above. These controls shall be protected with a siphon or equivalent means of maintaining a water seal that will prevent steam from entering the control. The control connection boiler tapping, external siphon, or piping to the boiler shall not be less than NPS 1/4, but where steel or wrought iron pipe or tubing is used, they shall not be less than NPS 1/2. The minimum size of an external siphon shall be NPS 1/4 or 3/8 in. O.D. nonferrous tubing.

**HG−606 AUTOMATIC LOW−WATER FUEL CUTOFF AND/OR WATER FEEDING DEVICE**

(a) Each automatically fired steam or vapor−system boiler shall have an automatic low−water fuel cutoff so located as to automatically cut off the fuel supply when the surface of the water falls to the lowest visible part of the water gage glass. If a water feeding device is installed, it shall be so constructed that the water inlet valve cannot into the boiler through the float chamber and so located as to supply requisite feedwater.

(b) Such a fuel cutoff or water feeding device may be attached directly to a boiler. A fuel cutoff or water feeding device may also be installed in the tapped openings available for attaching a water glass direct to a boiler, provided the connections are made to the boiler with nonferrous tees or Y's not less than NPS 1/2 between the boiler and the water glass so that the water glass is attached directly and as close as possible to the boiler; the run of the tee or Y shall take the water glass fittings, and the side outlet or branch of the tee or Y shall take the fuel cutoff or water feeding device. The ends of all nipples shall be reamed to full−size diameter.

(c) Fuel cutoffs and water feeding devices embodying a separate chamber shall have a vertical drain pipe and a blowoff valve not less than NPS 3/4, located at the lowest point in the water equalizing pipe connections so that the chamber and the equalizing pipe can be flushed and the device tested.

**HG−607 MODULAR STEAM HEATING BOILERS**

(a) Each module of a modular steam heating boiler shall be equipped with:

(1) steam gage, see HG−602

(2) water gage glass, see HG−603

(3) pressure control, see HG−605 (a)

(4) low water cutoff, see HG−606

(b) The assembled modular steam boiler shall also be equipped with pressure control, see HG−605 (b).

**HG−610 FOR HOT WATER HEATING OR HOT WATER SUPPLY BOILERS**

**HG−611 PRESSURE OR ALTITUDE GAGES**

(a) Each hot water heating or hot water supply boiler shall have a pressure or altitude gage connected to it or to its flow connection in such a manner that it cannot be shut off from the boiler except by a cock with tee or lever handle, placed on the pipe near the gage. The handle of the cock shall be parallel to the pipe in which it is located when the cock is open.

(b) The scale on the dial of the pressure or altitude gage shall be graduated approximately to not less than 1½ nor more than 3−1/2 times the pressure at which the safety relief valve is set.

(c) Piping or tubing for pressure− or altitude−gage connections shall be of nonferrous metal when smaller than NPS 1.

**HG−612 THERMOMETERS**

Each hot water heating or hot water supply boiler shall have a thermometer so located and connected that it shall be easily readable. The thermometer shall be so located that it shall at all times indicate the temperature of the water in the boiler at or near the outlet.

Removed by Register October 2005 No. 598. For current adm. code see: http://docs.legis.wisconsin.gov/code/admin_code.



**HG−613 TEMPERATURE CONTROL**

Each automatically fired hot water heating or hot water supply boiler shall be protected from over−temperature by two temperature−operated controls.

(a) Each individual automatically fired hot water heating or hot water supply boiler shall have a high temperature limit control that will cut off the fuel supply to prevent water temperature from exceeding its marked maximum water temperature at the boiler outlet. This control shall be constructed to prevent a temperature setting above the maximum.

(b) Each individual hot water heating or hot water supply boiler or each system of commonly connected boilers without intervening valves shall have a control that will cut off the fuel supply when the system water temperature reaches a preset operating temperature, which shall be less than the maximum water temperature.

**HG−614 LOW−WATER FUEL CUTOFF**

(a) Each automatically fired hot water boiler with heat input greater than 400,000 Btu/hr shall have an automatic low−water fuel cutoff that has been designed for hot water service, and it shall be so located as to automatically cut off the fuel supply when the surface of the water falls to the level established in (b) below (see Fig. HG−703.2).

(b) As there is no normal waterline to be maintained in a hot water boiler, any location of the low−water fuel cutoff above the lowest safe permissible water level established by the boiler manufacturer is satisfactory.

(c) A coil−type boiler or a watertube boiler with heat input greater than 400,000 Btu/hr requiring forced circulation to prevent overheating of the coils or tubes shall have a flow−sensing device installed in lieu of the low−water fuel cutoff required in (a) above to automatically cut off the fuel supply when the circulating flow is interrupted.

(d) A means shall be provided for testing the operation of the external low−water fuel cutoff without resorting to draining the entire system. Such means shall not render the device inoperable except as described as follows. If the means temporarily isolates the device from the boiler during this testing, it shall automatically return to its normal position. The connection may be so arranged that the device cannot be shut off from the boiler except by a cock placed at the device and provided with a tee or lever−handle arranged to be parallel to the pipe in which it is located when the cock is open.

**HG−615 MODULAR HOT WATER HEATING BOILERS**

(a) Each module of a modular hot water heating boiler shall be equipped with:

(1) pressure/altitude gage, see HG−611

(2) thermometer, see HG−612

(3) temperature control, see HG−613(a)

(b) The assembled modular hot water heating boiler shall also be equipped with:

(1) temperature control, see HG−613(b)

(2) low water fuel cutoff, see HG−614

**HG−620 FOR ALL BOILERS**

**HG−621 INSTRUMENTS, FITTINGS, AND CONTROLS MOUNTED INSIDE BOILER JACKETS**

Any or all instruments, fittings, and controls required by these rules may be installed inside of boiler jackets provided the water gage on a steam boiler is accessible without the use of tools and provided the water gage and pressure gage on a steam boiler or the thermometer and pressure gage on a water boiler are visible through an opening or openings at all times.

**HG−630 ELECTRIC WIRING**

**HG−632 TYPE CIRCUITRY TO BE USED**

Whether field or factory wired, the control circuitry shall be positively grounded and shall operate at 150 V or less. One of the two following systems may be employed to provide the control circuit.

(a) *Two−Wire Nominal 120 V System With Separate Equipment Ground Conductor.*

(1) This system shall consist of the line, neutral, and equipment ground conductors. The control panel frame and associated control circuitry metallic enclosures shall be electrically continuous and be bonded to the equipment ground conductor.

(2) The equipment ground conductor and the neutral conductor shall be bonded together at their origin in the electrical system as required by the NEC.

(3) The line side of the control circuit shall be provided with a time delay fuse sized as small as practicable.

(b) *Two−Wire Nominal 120 V System Obtained By Using An Isolation Transformer*

(1) The two−wire control circuit shall be obtained from the secondary side of an isolation transformer. One wire from the secondary of this transformer shall be electrically continuous and shall be bonded to a convenient cold water pipe. All metallic enclosures of control components shall be securely bonded to this ground control circuit wire. The primary side of the isolation transformer will normally be a two−wire source with a potential of 230 V or 208 V or 440 V.

(2) Both sides of the two−wire primary circuit shall be fused. The hot leg on the load side of the isolation transformer shall be fused as small as practicable and in no case fused above the rating of the isolation transformer.

**HG−633 LIMIT CONTROLS**

Limit controls shall be wired on the hot or line side of the control circuit.

**HG−634 SHUTDOWN SWITCHES AND CIRCUIT BREAKERS**

A manually operated remote heating plant shutdown switch or circuit breaker should be located just outside the boiler room door and marked for easy identification. Consideration should also be given to the type and location of the switch to safeguard against tampering. If the boiler room door is on the building exterior the switch should be located just inside the door. If there

Removed by Register October 2005 No. 598. For current adm. code see: http://docs.legis.wisconsin.gov/code/admin_code.



is more than one door to the boiler room, there should be a switch located at each door.

(a) For atmospheric−gas burners, and oil burners where a fan is on a common shaft with the oil pump, the complete burner and controls should be shut off.

(b) For power burners with detached auxiliaries, only the fuel input supply to the firebox need be shut off.

## ARTICLE 7
## INSTALLATION REQUIREMENTS

### HG−700 INSTALLATION REQUIREMENTS, ALL BOILERS

### HG−701 MOUNTING SAFETY AND SAFETY RELIEF VALVES

**HG−701.1 Permissible Mounting.** Safety valves and safety relief valves shall be located in the top or side of the boiler. They shall be connected directly to a tapped or flanged opening in the boiler, to a fitting connected to the boiler by a short nipple, to a Y−base, or to a valveless header connecting steam or water outlets on the same boiler. Coil or header type boilers shall have the safety valve or safety relief valve located on the steam or hot water outlet end. Safety valves and safety relief valves shall be installed with their spindles vertical. The opening or connection between the boiler and any safety valve or safety relief valve shall have at least the area of the valve inlet

**HG−701.2 Requirements for Common Connections for Two or More Valves**

(a) When a boiler is fitted with two or more safety valves on one connection, this connection shall have a cross−sectional area not less than the combined areas of inlet connections of all the safety valves with which it connects.

(b) When a Y−base is used, the inlet area shall be not less than the combined outlet areas. When the size of the boiler requires a safety valve or safety relief valve larger than 4½ in. in diameter, two or more valves having the required combined capacity shall be used. When two or more valves are used on a boiler, they may be single, directly attached, or mounted on a Y−base.

**HG−701.3 Threaded Connections.** A threaded connection may be used for attaching a valve.

**HG−701.4 Prohibited Mountings.** Safety and safety relief valves shall not be connected to an internal pipe in the boiler.

**HG−701.5 Use of Shutoff Valves Prohibited.** No shutoff of any description shall be placed between the safety or safety relief valve and the boiler, or on discharge pipes between such valves and the atmosphere.

**HG−701.6 Safety and Safety Relief Valve Discharge Piping**

(a) A discharge pipe shall be used. Its internal cross−sectional area shall be not less than the full area of the valve outlet or of the total of the valve outlets discharging there into and shall be as short and straight as possible and so arranged as to avoid undue stress on the valve or valves. A union may be installed in the discharge piping close to the valve outlet. When an elbow is placed on a safety or safety relief valve discharge pipe, it shall be located close to the valve outlet downstream of the union.

(b) The discharge from safety or safety relief valves shall be so arranged that there will be no danger of scalding attendants. The safety or safety relief valve discharge shall be piped away from the boiler to the point of discharge, and there shall be provisions made for properly draining the piping. The size and arrangement of discharge piping shall be independent of other discharge piping and shall be such that any pressure that may exist or develop will not reduce the relieving capacity of the relieving devices below that required to protect the boiler.

### HG−703 PIPING

**HG−703.1 Provisions for Expansion and Contraction.** Provisions shall be made for the expansion and contraction of steam and hot water mains connected to boilers by providing substantial anchorage at suitable points and by providing swing joints when boilers are installed in batteries, so there will be no undue strain transmitted to the boilers. See Figs. HG−703.1 and HG−703.2 for typical schematic arrangements of piping incorporating strain absorbing joints for steam and hot water heating boilers.

**HG−703.2 Return Pipe Connections**

(a) The return pipe connections of each boiler supplying a gravity return steam heating system shall be so arranged as to form a loop substantially as shown in Fig. HG−703.1 so that the water in each boiler cannot be forced out below the safe water level.

(b) For hand−fired boilers with a normal grate line, the recommended pipe sizes detailed as ”A” in Fig. HG−703.1 are NPS 1½ for 4 sq ft or less firebox area at the normal grate line, NPS 2½ for areas more than 4 sq ft up to 14.9 sq ft, and NPS 4 for 15 sq ft or more.

(c) For automatically fired boilers which do not have a normal grate line, the recommended pipe sizes detailed as ”A” in Fig. HG−703.1 are NPS 1½ for boilers with minimum safety valve relieving capacity 250 lb/hr or less, NPS 2½ for boilers with minimum safety valve relieving capacity from 251 lb/hr to 2000 lb/hr, inclusive, and NPS 4 for boilers with more than 2000 lb/hr minimum safety valve relieving capacity.

(d) Provision shall be made for cleaning the interior of the return piping at or close to the boiler. Washout openings may be used for return pipe connections and the washout plug placed in a tee or a cross so that the plug is directly opposite and as close as possible to the opening in the boiler.

### HG−705 FEEDWATER AND MAKEUP WATER CONNECTIONS

*(a) Steam Boilers.* Feedwater or water treatment shall be introduced into a boiler through the return piping system. Alternatively, feedwater or water treatment may be introduced through an independent connection. The water flow from the independent connection shall not discharge directly against parts of the boiler exposed to direct radiant heat from the fire. Feedwater or water treatment shall not be introduced through openings or connections provided for inspection or cleaning, safety valve, water column, water gage glass, or pressure gage. The feedwater pipe shall be provided with a check valve near the

Removed by Register October 2005 No. 598. For current adm. code see: http://docs.legis.wisconsin.gov/code/admin_code.



boiler and a stop valve or cock between he check valve and the boiler or between the check valve and the return pipe system.

(b) *Hot Water Boilers.* Makeup water may be introduced into a boiler through the piping system or through an independent connection. The water flow from the independent connection shall not discharge directly against parts of the boiler exposed to direct radiant heat from the fire. Makeup water shall not be introduced through openings or connections provided exclusively for inspection or cleaning, safety relief valve, pressure gage, or temperature gage. The makeup water pipe shall be provided with a check valve near the boiler and stop valve or cock between the check valve and the boiler or between the check valve and the piping system.

**HG−707 OIL HEATERS**

(a) A heater for oil or other liquid harmful to boiler operation shall not be installed directly in the steam or water space within a boiler.

(b) Where an external type heater for such service is used, means shall be provided to prevent the introduction into the boiler of oil or other liquid harmful to boiler operation.

**HG−709 PROVISIONS FOR THERMAL EXPANSION IN HOT WATER SYSTEMS**

All hot water heating systems incorporating hot water tanks or fluid relief columns shall be so installed as to prevent freezing under normal operating conditions.

**HG−709.1 Heating Systems With Open Expansion Tank.** An indoor overflow from the upper portion of the expansion tank shall be provided in addition to an open vent, the indoor overflow to be carried within the building to a suitable plumbing fixture or the basement.

**HG−709.2 Closed Heating Systems.** An expansion tank shall be installed that will be consistent with the volume and capacity of the system. If the system is designed for a working pressure of 30 psi or less, the tank shall be suitably designed for a minimum hydrostatic test pressure of 75 psi. Expansion tanks for systems designed to operate above 30 psi shall be constructed in accordance with Section VIII, Division 1. Provisions shall be made for draining the tank without emptying the system, except for prepressurized tanks.

The minimum capacity of the closed type expansion tank may be determined from Tables HG−709.1 and HG−709.2 or from the following formula where the necessary information is available:

$$V_t=[(0.00041T-0.0466)V_s]/[(P_a/P_f)-(P_a/P_o)]$$

where

$V_t$ = minimum volume of tanks, gal

$V_s$ = volume of system, not including tanks, gal

T = average operating temperature, F°

$P_a$ = atmospheric pressure, psia

$P_f$ = fill pressure, psia

$P_o$ = maximum operating pressure, psia

TABLE HG−709.1
EXPANSION TANK CAPACITIES FOR GRAVITY HOT WATER SYSTEMS

(Based on two−pipe system with average operating water temperature 170°F, using cast iron column radiation with heat emission rate 150 Btu/hr sq ft equivalent direction radiation)

| Installed Equivalent Direct Radiation, sq ft [Note (1)] | Tank Capacity, gal |
|---|---|
| Up to 350 | 18 |
| Up to 450 | 21 |
| Up to 650 | 24 |
| Up to 900 | 30 |
| Up to 1100 | 35 |
| Up to 1400 | 40 |
| Up to 1600 | 2−30 |
| Up to 1800 | 2−30 |
| Up to 2000 | 2−35 |
| Up to 2400 | 2−40 |

**Note:** (1) For systems with more than 2400 sq ft of installed equivalent direct water radiation, the required capacity of the cushion tank shall be increased on the basis of 1 gal tank capacity/33 sq ft of additional equivalent direct radiation.

TABLE HG−709.2
EXPANSION TANK CAPACITIES FOR FORCED HOT WATER SYSTEMS[1]

(Based on average operating water temperature 195°F, fill pressure 12 psig, and maximum operating pressure 30 psig)

| System Volume, gal | Tank Capacities, gal | |
|---|---|---|
| | Prepressurized Diaphragm Type | Nonpressurized Type |
| 100 | 9 | 15 |
| 200 | 17 | 30 |
| 300 | 25 | 45 |
| 400 | 33 | 60 |
| 500 | 42 | 75 |
| 1000 | 83 | 150 |
| 2000 | 165 | 300 |

**Note:** (1) System volume includes volume of water in boiler, radiation, and piping, not including the expansion tank. Expansion tank capacities are based on an acceptance factor of 0.4027 for prepressurized types and 0.222 for nonprepressurized types. A procedure for estimating system volume and determining expansion tank sizes for other design conditions may be found in Chapter 13 of the 1987 Systems and Applications Volume of the ASHRAE Handbook.

**HG−709.3 Hot Water Supply Systems.** If a system is equipped with a check valve or pressure reducing valve in the cold water inlet line, consideration should be given to the installation of an airtight expansion tank or other suitable air cushion. Otherwise, due to the thermal expansion of the water, the safety relief valve may lift periodically. If an expansion tank is provided, it shall be constructed in accordance with Section VIII, Division 1. Except for prepressurized tanks, which should be installed on the cold water side, provisions shall be made for

Removed by Register October 2005 No. 598. For current adm. code see: http://docs.legis.wisconsin.gov/code/admin_code.



draining the tank without emptying the system. See Fig. HLW−809.1 for a typical acceptable installation.

**HG−710 STOP VALVES**

**HG−710.1 For Single Steam Boilers.** When a stop valve is used in the supply pipe connection of a single steam boiler, there shall be one used in the return pipe connection.

**HG−710.2 For Single Hot Water Heating Boilers**

(a) Stop valves shall be located at an accessible point in the supply and return pipe connections as near the boiler nozzle as is convenient and practicable, of a single hot water heating boiler installation to permit draining the boiler without emptying the system.

(b) When the boiler is located above the system and can be drained without draining the system, stop valves may be eliminated.

**HG−710.3 For Multiple Boiler Installations.** A stop valve shall be used in each supply and return pipe connection of two or more boilers connected to a common system. See Figs. HG−703.1 and HG−703.2.

**HG−710.4 Type of Stop Valve(s)**

(a) All valves or cocks shall conform with the applicable portions of HG−203 and may be ferrous or nonferrous.

(b) The minimum pressure rating of all valves or cocks shall be at least equal to the pressure stamped upon the boiler, and the temperature rating of such valves or cocks, including all internal components, shall be not less than 250°F.

(c) Valves or cocks shall be flanged, threaded or have ends suitable for welding or brazing.

(d) All valves or cocks with stems or spindles shall have adjustable pressure type packing glands and, in addition, all plug type cocks shall be equipped with a guard or gland. The plug or other operating mechanism shall be distinctly marked in line with the passage to indicate whether it is opened or closed.

(e) All valves or cocks shall have tight closure when under boiler hydrostatic test pressure.

**HG−710.5 Identification of Stop Valves by Tags.** When stop valves are used, they shall be properly designated substantially as follows by tags of metal or other durable material fastened to them:

Supply Valve − Number ( )

Do Not Close Without Also
Closing Return Valve− Number ( )

Return Valve − Number ( )

Do Not Close Without Also Closing Supply
Valve−Number ( )

**HG−715 BOTTOM BLOWOFF AND DRAIN VALVES**

(a) *Bottom Blowoff Valve.* Each steam boiler shall have a bottom blowoff connection fitted with a valve or cock connected to the lowest water space practicable with a minimum size as shown in Table HG−715. The discharge piping shall be full size to the point of discharge.

(b) Boilers having a capacity of 25 gal or less are exempt from the above requirements, except that they must have 3/4 in. NPS minimum drain valve.

(c) *Drain Valve.* Each steam or hot water boiler shall have one or more drain connections, fitted with valves or cocks connecting to the lowest water containing spaces. The minimum size of the drain piping, valves, and cocks shall be 3/4 in. The discharge piping shall be full size to the point of discharge. When the blowoff connection is located at the lowest water containing space, a separate drain connection is not required.

(d) *Minimum Pressure Rating.* The minimum pressure rating of valves and cocks used for blowoff or drain purposes shall be at least equal to the pressure stamped on the boiler but in no case less than 30 psi. The temperature rating of such valves and cocks shall not be less than 250°F.

TABLE HG−715
SIZE OF BOTTOM BLOWOFF PIPING,
VALVES, AND COCKS

| Minimum Required Safety Valve Capacity, lb of steam/hr [Note (1)] | Blowoff Piping, Valves, and Cocks Size, in. (min.) |
|---|---|
| Up to 500 | 3/4 |
| 501 to 1250 | 1 |
| 1251 to 2500 | 1−1/4 |
| 2501 to 6000 | 1−1/2 |
| 6001 and larger | 2 |

**Note:** (1) To determine the discharge capacity of safety relief valves in terms of Btu, the relieving capacity in lb of steam/hr is multiplied by 1000.

Removed by Register October 2005 No. 598. For current adm. code see: http://docs.legis.wisconsin.gov/code/admin_code.



# EXCERPTS FROM:
# ASME BOILER AND PRESSURE VESSEL CODE

## SECTION VIII
## PRESSURE VESSELS
## 1998 EDITION

### INTRODUCTION

**U−1 SCOPE**

U−1(a)(1) The Forward provides the basis for the rules described in this Division.

U−1(a)(2) For the scope of this Division, pressure vessels are containers for the containment of pressure, either internal or external. This pressure may be obtained from an external source, or by the application of heat from a direct or indirect source, or any combination thereof.

U−1(a)(3) This Division contains mandatory requirements, specific prohibitions, and nonmandatory guidance for pressure vessel materials, design, fabrication, examination, inspection, testing, certification, and pressure relief. The Code does not address all aspects of these activities, and those aspects which are not specifically addressed should not be considered prohibited. Engineering judgment must be consistent with the philosophy of this Division, and such judgments must never be used to overrule mandatory requirements or specific prohibitions of this Division. See also informative and nonmandatory guidance regarding metallurgical phenomena in Appendix 6 of Section II, Part D.

U−1(b) This Division is divided into three Subsections, Mandatory Appendices, and Nonmandatory Appendices. Subsection A consists of Part UG, covering the general requirements applicable to all pressure vessels. Subsection B covers specific requirements that are applicable to the various methods used in the fabrication of pressure vessels. It consists of Parts UW, UF, and UB dealing with welded, forged, and brazed methods, respectively. Subsection C covers specific requirements applicable to the several classes of materials used in pressure vessel construction. It consists of Parts UCS, UNF, UHA, UCI, UCL, UCD, UHT, ULW, and ULT dealing with carbon and low alloy steels, nonferrous metals, high alloy steels, cast iron, clad and lined material, cast ductile iron, ferritic steels with properties enhanced by heat treatment, layered construction, and low temperature materials, respectively. Section II, Part D also contains tables of maximum allowable stress values for these classes of materials.

The Mandatory Appendices address specific subjects not covered elsewhere in this Division, and their requirements are mandatory when the subject covered is included in construction under this Division. The Nonmandatory Appendices provide information and suggested good practices.

U−1(c)(1) The scope of this Division has been established to identify the components and parameters considered in formulating the rules given in this Division. Laws or regulations issued by municipality, state, provincial, federal, or other enforcement or regulatory bodies having jurisdiction at the location of an installation establish the mandatory applicability of the Code rules, in whole or in part, within their jurisdiction. Those laws or regulations may require the use of this Division of the Code for vessels or components not considered to be within its Scope. These laws or regulations should be reviewed to determine size or service limitations of the coverage which may be different or more restrictive than those given here.

U−1(c)(2) Based on the Committee's consideration, the following classes of vessels are not included in the scope of this Division; however, any pressure vessel which meets all the applicable requirements of this Division may be stamped with the Code U Symbol:

(a) those within the scope of other Sections;

(b) fired process tabular heaters;

(c) pressure containers which are integral parts or components of rotating or reciprocating mechanical devices, such as pumps, compressors, turbines, generators, engines, and hydraulic or pneumatic cylinders where the primary design consideration and/or stresses are derived from the functional requirements of the device;

(d) except as covered in U−1(f), structures whose primary function is the transport of fluids from one location to another within a system of which it is an integral part, that is, piping systems;

(e) piping components, such as pipe, flanges, bolting, gaskets, valves, expansion joints, fittings, and the pressure containing parts of other components, such as strainers and devices which serve such purposes as mixing, separating, snubbing, distributing, and metering or controlling flow, provided that pressure containing parts of such components are generally recognized as piping components or accessories;

(f) a vessel for containing water under pressure, including those containing air the compression of which serves only as a cushion, when none of the following limitations are exceeded:

(1) a design pressure of 300 psi;

(2) a design temperature of 210°F.

(g) a hot water supply storage tank heated by steam or any other indirect means when none of the following limitations is exceeded:

(1) a heat input of 200,000 Btu/hr;

(2) a water temperature of 210°F;

(3) a nominal water containing capacity of 120 gal;

(h) vessels having an internal or external operating pressure (see 3−2) not exceeding 15 psi with no limitation on size [see UG−28(e)];

Removed by Register October 2005 No. 598. For current adm. code see: http://docs.legis.wisconsin.gov/code/admin_code.



(i) vessels having an inside diameter, width, height, or cross section diagonal not exceeding 6 in., with no limitation on length of vessel or pressure;

(j) pressure vessels for human occupancy.

U−1(d) The rules of this Division have been formulated on the basis of design principles and construction practices applicable to vessels designed for pressures not exceeding 3000 psi. For pressures above 3000 psi, deviations from and additions to these rules usually are necessary to meet the requirements of design principles and construction practices for these higher pressures. Only in the event that after having applied these additional design principles and construction practices the vessel still complies with all of the requirements of this Division may it be stamped with the applicable Code symbol.

U−1(e) In relation to the geometry of pressure containing parts, the scope of this Division shall include the following:

U−1(e)(1) where external piping; other pressure vessels including heat exchangers; or mechanical devices, such as pumps, mixers, or compressors, are to be connected to the vessel:

(a) the welding end connection for the first circumferential joint for welded connections [see UW−13(g)];

(b) the first threaded joint for screwed connections;

(c) the face of the first flange for bolted, flanged connections;

(d) the first sealing surface for proprietary connections or fittings;

U−1(e)(2) where nonpressure parts are welded directly to either the internal or external pressure retaining surface of a pressure vessel, this scope shall include the design, fabrication, testing, and material requirements established for nonpressure part attachments by the applicable paragraphs of this Division;

U−1(e)(3) pressure retaining covers for vessel openings, such as manhole and handhole covers;

U−1(e)(4) the first sealing surface for proprietary fittings or components for which rules are not provided by this Division, such as gages, instruments, and nonmetallic components.

U−1(f) The scope of the Division includes provisions for pressure relief devices necessary to satisfy the requirements of UG−125 through UG−136 and Appendix 11.

U−1(g) Unfired steam boilers as defined in Section I shall be constructed in accordance with the rules of Section I or this Division [see UG−125(b) and UW−2(c)].

The following pressure vessels in which steam is generated shall be constructed in accordance with the rules of this Division:

U−1(g)(1) vessels known as evaporators or heat exchangers;

U−1(g)(2) vessels in which steam is generated by the use of heat resulting from operation of a processing system containing a number of pressure vessels such as used in the manufacture of chemical and petroleum products;

U−1(g)(3) vessels in which steam is generated but not withdrawn for external use.

U−1(h) Pressure vessels or parts subject to direct firing from the combustion of fuel (solid, liquid, or gaseous), which are not within the scope of Sections I, III, or IV may be constructed in accordance with the rules of this Division [see UW−2(d)].

U−1(i) Gas fired jacketed steam kettles with jacket operating pressures not exceeding 50 psi may be constructed in accordance with the rules of this Division (see Appendix 19).

U−1(j) Pressure vessels exclusive of those covered in U−1(c), U−1(g), U−1(h), and U−1(i) that are not required by the rules of this Division to be fully radiographed, which are not provided with quick actuating closures (see UG−35), and that do not exceed the following volume and pressure limits may be exempted from inspection by Inspectors, as defined in UG−91, provided that they comply in all other respects with the requirements of this Division:

U−1(j)(1) 5 cu ft in volume and 250 psi design pressure; or

U−1(j)(2) 3 cu ft in volume and 350 psi design pressure;

U−1(j)(3) 1½ cu ft in volume and 600 psi design pressure.

In an assembly of vessels, the limitations in (1) through (3) above apply to each vessel and not the assembly as a whole. Straight line interpolation for intermediate volumes and design pressures is permitted. Vessels fabricated in accordance with this rule shall be marked with the "UM" symbol in Fig. UG−116 sketch (b) and with the data required in UG−116. Certificates of Compliance shall satisfy the requirements of UG−120(a).

U−1(k) The degree of nondestructive examination(s) and the acceptance standards beyond the requirements of this Division shall be a matter of prior agreement between the Manufacturer and user or his designated agent.

**U−2 GENERAL**

(a) The user or his designated agent shall establish the design requirements for pressure vessels, taking into consideration factors associated with normal operation, and such other conditions as startup and shutdown.

Such consideration shall include but shall not be limited to the following:

(1) the need for corrosion allowances;

(2) the definition of lethal services. For example, see UW−2(a).

(3) the need for postweld heat treatment beyond the requirements of this Division and dependent on service conditions;

(4) for pressure vessels in which steam is generated, or water is heated [see U−1(g) and (h)], the need for piping, valves, instruments, and fittings to perform the functions covered by PG−59 through PG−61 of Section I.

## PRESSURE RELIEF DEVICES

**UG−125 GENERAL**

(a) All pressure vessels within the Scope of this Division, irrespective of size or pressure, shall be provided with pressure

Removed by Register October 2005 No. 598. For current adm. code see: http://docs.legis.wisconsin.gov/code/admin_code.



relief devices in accordance with the requirements of UG−125 through UG−137. It is the responsibility of the user to ensure that the required pressure relief devices are properly installed prior to initial operation. These pressure relief devices need not be supplied by the vessel Manufacturer. Unless otherwise defined in this Division, the definitions relating to pressure relief devices in Section 2 of ASME PTC 25 shall apply.

(b) An unfired steam boiler, as defined in U−1(g), shall be equipped with pressure relief devices required by Section I insofar as they are applicable to the service of the particular installation.

(c) All pressure vessels other than unfired steam boilers shall be protected by a pressure relieving device that shall prevent the pressure from rising more than 10% or 3 psi, whichever is greater, above the maximum allowable working pressure except as permitted in (1) and (2) below. (See UG−134 for pressure settings.)

(1) When multiple pressure relief devices are provided and set in accordance with UG−134(a), they shall prevent the pressure from rising more than 16% or 4 psi, whichever is greater, above the maximum allowable working pressure.

(2) Where an additional hazard can be created by exposure of a pressure vessel to fire or other unexpected sources of external heat, supplemental pressure relief devices shall be installed to protect against excessive pressure. Such supplemental pressure relief devices shall be capable of preventing the pressure from rising more than 21% above the maximum allowable working pressure. The same pressure relief devices may be used to satisfy the capacity requirements of (c) or (c)(1) above and this paragraph provided the pressure setting requirements of UG−134(a) are met.

(3) Pressure relief devices, intended primarily for protection against exposure of a pressure vessel to fire or other unexpected sources of external heat installed on vessels having no permanent supply connection and used for storage at ambient temperatures of nonrefrigerated liquefied compressed gases, are excluded from the requirements of (c)(1) and (c)(2) above, provided:

(a) the pressure relief devices are capable of preventing the pressure from rising more than 20% above the maximum allowable working pressure of the vessels;

(b) the set pressure marked on these devices shall not exceed the maximum allowable working pressure of the vessels;

(c) the vessels have sufficient ullage to avoid a liquid full condition;

(d) the maximum allowable working pressure of the vessels on which these pressure relief devices are installed is greater than the vapor pressure of the stored liquefied compressed gas at the maximum anticipated temperature that the gas will reach under atmospheric conditions; and

(e) pressure relief valves used to satisfy these provisions also comply with the requirements of UG−129(a)(5), UG−131(c)(2), and UG−134(d)(2).

(d) Pressure relief devices shall be constructed, located, and installed so that they are readily accessible for inspection, replacement, and repair and so that they cannot be readily rendered inoperative (see Appendix M), and should be selected on the basis of their intended service.

(e) Pressure relief valves or nonreclosing pressure relief devices may be used to protect against overpressure. Nonreclosing pressure relief devices may be used either alone or, if applicable, in combination with pressure relief valves on vessels.

**Note:** Use of nonreclosing pressure relief devices of some types may be advisable on vessels containing substances that may render a pressure relief valve inoperative, where a loss of valuable material by leakage should be avoided, or where contamination of the atmosphere by leakage of noxious fluids must be avoided. The use of rupture disk devices may also be advisable when very rapid rates of pressure rise may be encountered.

(f) Vessels that are to operate completely filled with liquid shall be equipped with pressure relief devices designed for liquid service, unless otherwise protected against overpressure.

(g) The pressure relief devices required in (a) above need not be installed directly on a pressure vessel when the source of pressure is external to the vessel and is under such positive control that the pressure in the vessel cannot exceed the maximum allowable working pressure at the operating temperature except as permitted in (c) above (see UG−98).

**Note:** Pressure reducing valves and similar mechanical or electrical control instruments, except for pilot operated pressure relief valves as permitted in UG−126(b), are not considered as sufficiently positive in action to prevent excess pressures from being developed.

(h) Pressure relief valves for steam service shall meet the requirements of UG−131(b).

**UG−126 PRESSURE RELIEF VALVES**

(a) Safety, safety relief, and relief valves shall be of the direct spring loaded type.

(b) Pilot operated pressure relief valves may be used, provided that the pilot is self−actuated and the main valve will open automatically at not over the set pressure and will discharge its full rated capacity if some essential part of the pilot should fail.

(c) The spring in a pressure relief valve shall not be set for any pressure more than 5% above or below that for which the valve is marked, unless the setting is within the spring design range established by the valve Manufacturer or is determined to be acceptable to the Manufacturer. The initial adjustment shall be performed by the Manufacturer, his authorized representative, or an Assembler, and a valve data tag shall be provided that identifies the set pressure, capacity, and date. The valve shall be sealed with a seal identifying the Manufacturer, his authorized representative, or the Assembler performing the adjustment.

(d) The set pressure tolerances, plus or minus, of pressure relief valves shall not exceed 2 psi for pressures up to and including 70 psi and 3% for pressures above 70 psi.

**UG−127 NONRECLOSING PRESSURE RELIEF DEVICES**

(a) *Rupture Disk Devices*

(1) *General.* Every rupture disk shall have a marked burst pressure established by rules of UG−137(d)(3) within a manufacturing design range at a specified disk temperature and shall be marked with a lot number. The burst pressure tolerance at the specified disk temperature shall not exceed ±2 psi for marked burst pressure up to and including 40 psi and ±5% for marked burst pressure above 40 psi.

Removed by Register October 2005 No. 598. For current adm. code see: http://docs.legis.wisconsin.gov/code/admin_code.



(2) *Relieving Capacity.* The rated flow capacity of a pressure relief system which uses a rupture disk device as the sole relief device shall be determined by a value calculated under the requirements of (a) using a coefficient of discharge or (b) using flow resistances below.

(a) When the rupture disk device discharges directly to atmosphere and

(1) is installed within eight pipe diameters from the vessel nozzle entry; and

(2) with a length of discharge pipe not greater than five pipe diameters from the rupture disk device; and

(3) the nominal diameters of the inlet and discharge piping are equal to or greater than the stamped NPS designator of the device,

the calculated relieving capacity of a pressure relief system shall not exceed a value based on the applicable theoretical flow equation [see UG−131(e)(2) and Appendix 11] for the various media multiplied by a coefficient of discharge $K$ equal to 0.62. The area A in the theoretical flow equation shall be the minimum net flow area as specified by the rupture disk device Manufacturer.

(b) The calculated capacity of any pressure relief system may be determined by analyzing the total system resistance to flow. This analysis shall take into consideration the flow resistance of the rupture disk device, piping and piping components including the exit nozzle on the vessels, elbows, tees, reducers, and valves. The calculation shall be made using accepted engineering practices for determining fluid flow through piping systems. This calculated relieving capacity shall be multiplied by a factor of 0.90 or less to allow for uncertainties inherent with this method. The certified flow resistance $K_R$ for the rupture disk device, expressed as the velocity head loss, shall be determined in accordance with UG−131(k) through (r).

(3) *Application of Rupture Disks*

(a) A rupture disk device may be used as the sole pressure relieving device on a vessel.

**Note:** When rupture disk devices are used, it is recommended that the design pressure of the vessel be sufficiently above the intended operating pressure to provide sufficient margin between operating pressure and rupture disk bursting pressure to prevent premature failure of the rupture disk due to fatigue or creep.

Application of rupture disk devices to liquid service should be carefully evaluated to assure that the design of the rupture disk device and the dynamic energy of the system on which it is installed will result in sufficient opening of the rupture disk.

(b) A rupture disk device may be installed between a pressure relief valve and the vessel provided:

(1) the combination of the pressure relief valve and the rupture disk device is ample in capacity to meet the requirements of UG−133(a) and (b);

(2) the marked capacity of a pressure relief valve (nozzle type) when installed with a rupture disk device between the inlet of the valve and the vessel shall be multiplied by a factor of 0.90 of the rated relieving capacity of the valve alone, or alternatively, the capacity of such a combination shall be established in accordance with (3) below;

(3) the capacity of the combination of the rupture disk device and the pressure relief valve may be established in accordance with the appropriate paragraphs of UG−132;

(4) the space between a rupture disk device and a pressure relief valve shall be provided with a pressure gage, a try cock, free vent, or suitable telltale indicator. This arrangement permits detection of disk rupture or leakage.

(5) the opening provided through the rupture disk, after burst, is sufficient to permit a flow equal to the capacity of the valve [(2) and (3) above], and there is no chance of interference with proper functioning of the valve; but in no case shall this area be less than the area of the inlet of the valve unless the capacity and functioning of the specific combination of rupture disk device and pressure relief valve have been established by test in accordance with UG−132.

(c) A rupture disk device may be installed on the outlet side of a pressure relief valve which is opened by direct action of the pressure in the vessel provided:

(1) the pressure relief valve is so designed that it will not fail to open at its proper pressure setting regardless of any back pressure that can accumulate between the pressure relief valve disk and the rupture disk. The space between the pressure relief valve disk and the rupture disk shall be vented or drained to prevent accumulation of pressure due to a small amount of leakage from the valve;

(2) the pressure relief valve is ample in capacity to meet the requirements of UG−133(a) and (b);

(3) the marked burst pressure of the rupture disk at the specified disk temperature plus any pressure of the outlet piping shall not exceed the design pressure of the outlet portion of the pressure relief valve and any pipe or fitting between the valve and the rupture disk device. However, in no case shall the marked burst pressure of the rupture disk at the specified disk temperature plus any pressure in the outlet piping exceed the maximum allowable working pressure of the vessel or the set pressure of the pressure relief valve;

(4) the opening provided through the rupture disk device after breakage is sufficient to permit a flow equal to the rated capacity of the attached pressure relief valve without exceeding the allowable overpressure;

(5) any piping beyond the rupture disk cannot be obstructed by the rupture disk or fragment;

(6) the contents of the vessel are clean fluids, free from gumming or clogging matter, so that accumulation in the space between the valve inlet and the rupture disk (or in any other outlet that may be provided) will not clog the outlet;

(7) the bonnet of the pressure relief valve shall be vented to prevent accumulation of pressure.

(b) *Breaking Pin Device*

(1) Breaking pin devices shall not be used as single devices but only in combination between the pressure relief valve and the vessel.

(2) The space between a breaking pin device and a pressure relief valve shall be provided with a pressure gage, a try cock,

Removed by Register October 2005 No. 598. For current adm. code see: http://docs.legis.wisconsin.gov/code/admin_code.



a free vent, or suitable telltale indicator. This arrangement permits detection of breaking pin device operation or leakage.

(3) Each breaking pin device shall have a rated pressure and temperature at which the pin will break. The breaking pin shall be identified to a lot number and shall be guaranteed by the Manufacturer to break when the rated pressure, within the following tolerances, is applied to the device:

| Rated Pressure, psi | | |
|---|---|---|
| Minimum | Maximum | Tolerance, Plus or Minus, psi |
| 30 | 150 | 5 |
| 151 | 275 | 10 |
| 276 | 375 | 15 |

(4) The rated pressure of the breaking pin plus the tolerance in psi shall not exceed 105% of the maximum allowable working pressure of the vessel to which it is applied.

(5) The rated pressure at the specified temperature shall be verified by breaking two or more sample breaking pins from each lot of the same material and the same size as those to be used. The lot size shall not exceed 25. The test shall be made in a device of the same form and pressure dimensions as that in which the breaking pin is to be used.

(c) *Spring Loaded Nonreclosing Pressure Relief Device*

(1) A spring loaded nonreclosing pressure relief device, pressure actuated by means which permit the spring loaded portion of the device to open at the specified set pressure and remain open until manually reset, may be used provided the design of the spring loaded nonreclosing device is such that if the actuating means fail, the device will achieve full opening at or below its set pressure. Such a device may not be used in combination with any other pressure relief device. The tolerance on opening point shall not exceed ±5%.

(2) The calculated capacity rating of a spring loaded nonreclosing pressure relief device shall not exceed a value based on the applicable theoretical formula (see UG−131) for the various media, multiplied by: K = coefficient = 0.62.

The area A (square inches) in the theoretical formula shall be the flow area through the minimum opening of the spring loaded nonreclosing pressure relief device.

(3) In lieu of the method of capacity rating in (2) above, a Manufacturer may have the capacity of a spring loaded nonreclosing pressure relief device design certified in general accordance with the procedures of UG−131, as applicable.

**UG− 128 LIQUID PRESSURE RELIEF VALVES**

Any liquid pressure relief valve used shall be at least NPS ½.

**UG−129 MARKING**

(a) *Safety, Safety Relief, Relief, Liquid Pressure Relief, and Pilot Operated Pressure Relief Valves.* Each safety, safety relief, relief, liquid pressure relief, and pilot operated pressure relief valve NPS ½ and larger shall be plainly marked by the Manufacturer or Assembler with the required data in such a way that the marking will not be obliterated in service. The marking may be placed on the valve or on a plate or plates that satisfy the requirements of UG−119. The marking shall include the following:

(1) the name, or an acceptable abbreviation, of the Manufacturer and the Assembler;

(2) Manufacturer's design or type number;

(3) NPS size _____ (the nominal pipe size of the valve inlet);

(4) set pressure _____ psi, and, if applicable per UG−136(d)(4), cold differential test pressure _____ psi;

(5) certified capacity (as applicable):

(a) lb/hr of saturated steam at an overpressure of 10% or 3 psi, whichever is greater for valves certified on steam complying with UG−131(b); or

(b) gal/min of water at 70°F at an overpressure of 10% or 3 psi, whichever is greater for valves certified on water; or

(c) SCFM (standard cubic feet per minute at 60°F and 14.7 psia), or lb/min, of air at an overpressure of 10% or 3 psi, whichever is greater. Valves that are capacity certified in accordance with UG−131(c)(2) shall be marked "at 20% overpressure."

(d) In addition to one of the fluids specified above, the Manufacturer may indicate the capacity in other fluids (see Appendix 11).

(6) year built, or alternatively, a coding may be marked on the valve such that the valve Manufacturer or Assembler can identify the year the valve was assembled or tested;

(7) ASME Symbol as shown in Fig. UG−129.1. The pilot of a pilot operated pressure relief valve shall be plainly marked by the Manufacturer or Assembler showing the name of the Manufacturer, the Manufacturer's design or type number, the set pressure in pounds per square inch, and the year built, or alternatively, a coding that the Manufacturer can use to identify the year built.

On valves smaller than NPS ½, the markings may be made on a metal tag attached by wire or adhesive meeting the requirements of UG−119 or other means suitable for the service conditions.

(b) Safety and safety relief valves certified for a steam discharging capacity under the provisions of Section I and bearing the official Code Symbol Stamp of Section I for safety valves may be used on pressure vessels. The rated capacity in terms of other fluids shall be determined by the method of conversion given in Appendix 11. [See UG−131(h).]

FIG. UG−129.1 OFFICIAL SYMBOL FOR STAMP TO DENOTE THE AMERICAN SOCIETY OF MECHANICAL ENGINEERS' STANDARD FOR PRESSURE RELIEF VALVES

(c) *Pressure Relief Valves in Combination With Rupture Disk Devices.* Pressure relief valves in combination with rupture disk

Removed by Register October 2005 No. 598. For current adm. code see: http://docs.legis.wisconsin.gov/code/admin_code.



devices shall be marked with the capacity as established in accordance with UG−127(a)(3)(b)(2) (using 0.90 factor) or the combination capacity factor established by test in accordance with UG−132(a) or (b), in addition to the marking of UG−129(a) and (f) below. The marking may be placed on the pressure relief valve or rupture disk device or on a plate or plates that satisfy the requirements of UG−119. The marking shall include the following:

(1) name of Manufacturer of valve;

(2) design or type number of valve;

(3) name of Manufacturer of rupture disk device;

(4) design or type number of rupture disk device;

(5) capacity or combination capacity factor;

(6) name of organization responsible for this marking. This shall be either the vessel user, vessel Manufacturer, rupture disk Manufacturer, or pressure relief valve Manufacturer.

(d) *Pressure Relief Valves in Combination With Breaking Pin Devices.* Pressure relief valves in combination with breaking pin devices shall be marked in accordance with (a) above. In addition, the rated pressure shall be marked on the breaking pin and the breaking pin housing.

(e) *Rupture Disk Devices.* Every rupture disk shall be plainly marked by the Manufacturer in such a way that the marking will not be obliterated in service. The rupture disk marking may be placed on the flange of the disk or on a metal tab that satisfies the requirements of UG−119. The marking shall include the following:

(1) the name or identifying trademark of the Manufacturer;

(2) Manufacturer's design or type number;

(3) lot number;

(4) disk material;

(5) size _____ (NPS of rupture disk holder);

(6) marked burst pressure _____ psi;

(7) specified disk temperature _____ °F;

(8) minimum net flow area _____ sq in.;

(9) certified flow resistance $K_R$ _____ ;

(10) ASME symbol as shown in Fig. UG−129.2;

(11) year built, or alternatively, a coding may be marked on the rupture disk such that the rupture disk device Manufacturer can identify the year the rupture disk device was assembled and tested.

Items (1), (2), and (5) above and flow direction shall also be marked on the rupture disk holder.

FIG. UG−129.2 OFFICIAL SYMBOL FOR STAMP TO DENOTE THE AMERICAN SOCIETY OF MECHANICAL ENGINEERS' STANDARD FOR RUPTURE DISK DEVICES

(f) *Spring Loaded Nonreclosing Pressure Relief Devices.* Spring loaded nonreclosing pressure relief devices shall be marked in accordance with (a) above except that the Code Symbol Stamp is to be applied only when the capacity has been established and certified in accordance with UG−127(c)(3) and all other requirements of UG−130 have been met.

**UG−133 DETERMINATION OF PRESSURE RELIEVING REQUIREMENTS**

(a) Except as permitted in (b) below, the aggregate capacity of the pressure relief devices connected to any vessel or system of vessels for the release of a liquid, air, steam, or other vapor shall be sufficient to carry off the maximum quantity that can be generated or supplied to the attached equipment without permitting a rise in pressure within the vessel of more than 16% above the maximum allowable working pressure when the pressure relief devices are blowing.

(b) Pressure relief devices as permitted in UG−125(c)(2), as protection against excessive pressure caused by exposure to fire or other sources of external heat, shall have a relieving capacity sufficient to prevent the pressure from rising more than 21% above the maximum allowable working pressure of the vessel when all pressure relief devices are blowing.

(c) Vessels connected together by a system of adequate piping not containing valves which can isolate any vessel may be considered as one unit in figuring the required relieving capacity of pressure relief devices to be furnished.

(d) Heat exchangers and similar vessels shall be protected with a pressure relief device of sufficient capacity to avoid overpressure in case of an internal failure.

(e) The official rated capacity, or the certified flow resistance and minimum net flow area, of a pressure relief device shall be that which is stamped on the device and guaranteed by the Manufacturer.

(f) The rated pressure relieving capacity of a pressure relief valve for other than steam or air shall be determined by the method of conversion given in Appendix 11.

(g) To prorate the relieving capacity at any relieving pressure greater than 1.10*p*, as permitted under UG−125, a multiplier may be applied to the official relieving capacity of a pressure relief device as follows:

$$\frac{P + 14.7}{1.10p + 14.7}$$

where

P = relieving pressure, psig

*p* = set pressure, psig

Removed by Register October 2005 No. 598. For current adm. code see: http://docs.legis.wisconsin.gov/code/admin_code.



For steam pressures above 1500 psig, the above multiplier is not applicable. For steam valves with relieving pressures greater than 1500 psig and less than or equal to 3200 psig, the capacity at relieving pressures greater than 1.10*p* shall be determined using the equation for steam and the correction factor for high pressure steam in UG−131(e)(2) with the permitted absolute relieving pressure and the coefficient *K* for that valve design.

**UG−134 PRESSURE SETTING OF PRESSURE RELIEF DEVICES**

(a) When a single pressure relief device is used, the set pressure marked on the device shall not exceed the maximum allowable working pressure of the vessel. When the required capacity is provided in more than one pressure relief device, only one pressure relief device need be set at or below the maximum allowable working pressure, and the additional pressure relief devices may be set to open at higher pressures but in no case at a pressure higher than 105% of the maximum allowable working pressure, except as provided in (b) below.

(b) For pressure relief devices permitted in UG−125(c)(2) as protection against excessive pressure caused by exposure to fire or other sources of external heat, the device marked set pressure shall not exceed 110% of the maximum allowable working pressure of the vessel. If such a pressure relief device is used to meet the requirements of both UG−125(c) and UG−125(c)(2), the device marked set pressure shall not be over the maximum allowable working pressure.

(c) The pressure relief device set pressure shall include the effects of static head and constant back pressure.

(d)(1) The set pressure tolerance for pressure relief valves shall not exceed ±2 psi for pressures up to and including 70 psi and ±3% for pressures above 70 psi, except as covered in (d)(2) below.

(2) The set pressure tolerance of pressure relief valves which comply with UG−125(c)(3) shall be within −0%, +10%.

(e) The burst pressure tolerance for rupture disk devices at the specified disk temperature shall not exceed ±2 psi of marked burst pressure up to 40 psi and ±5% of marked burst pressure 40 psi and over.

**UG−135 INSTALLATION**

(a) Pressure relief devices intended for use in compressible fluid service shall be connected to the vessel in the vapor space above any contained liquid or to piping connected to the vapor space in the vessel which is to be protected. Pressure relief devices intended for use in liquid service shall be connected below the normal liquid level.

(b)(1) The opening through all pipe, fittings, and nonreclosing pressure relief devices (if installed) between a pressure vessel and its pressure relief valve shall have at least the area of the pressure relief valve inlet. The characteristics of this upstream system shall be such that the pressure drop will not reduce the relieving capacity below that required or adversely affect the proper operation of the pressure relief valve.

(2) The opening in the vessel wall shall be designed to provide unobstructed flow between the vessel and its pressure relief device. (See Appendix M.)

(c) When two or more required pressure relief devices are placed on one connection, the inlet internal cross−sectional area of this connection shall be either sized to avoid restricting flow to the pressure relief devices or made at least equal to the combined inlet areas of the safety devices connected to it. The flow characteristics of the upstream system shall satisfy the requirements of (b) above. (See Appendix M.)

(d) There shall be no intervening stop valves between the vessel and its pressure relief device or devices, or between the pressure relief device or devices and the point of discharge, except:

(1) when these stop valves are so constructed or positively controlled that the closing of the maximum number of block valves possible at one time will not reduce the pressure relieving capacity provided by the unaffected relieving devices below the required relieving capacity; or

(2) under conditions set forth in Appendix M.

(e) The pressure relief devices on all vessels shall be so installed that their proper functioning will not be hindered by the nature of the vessel's contents.

(f) Discharge lines from pressure relief devices shall be designed to facilitate drainage or shall be fitted with drains to prevent liquid from lodging in the discharge side of the safety device, and such lines shall lead to a safe place of discharge. The size of the discharge lines shall be such that any pressure that may exist or develop will not reduce the relieving capacity of the pressure relief devices below that required to properly protect the vessel, or adversely affect the proper operation of the pressure relief devices. [See UG−136(a)(8) and Appendix M.]

Removed by Register October 2005 No. 598. For current adm. code see: http://docs.legis.wisconsin.gov/code/admin_code.



# EXCERPTS FROM:

# POWER PIPING CODE
# ANSI/ASME B31.1
# 1998 EDITION

## FOREWORD

The general philosophy underlying this Power Piping Code is to parallel those provisions of Section I, Power Boilers, of the ASME Boiler and Pressure Vessel Code, as they can be applied to power piping systems. The Allowable Stress Values for power piping are generally consistent with those assigned for power boilers. This Code is more conservative than some other piping codes, reflecting the need for long service life and maximum reliability in power plant installations.

The Power Piping Code as currently written does not differentiate between the design, fabrication, and erection requirements for critical and noncritical piping systems, except for certain stress calculations and mandatory nondestructive tests of welds for heavy wall, high temperature applications. The problem involved is to try to reach agreement on how to evaluate criticality, and to avoid the inference that noncritical systems do not require competence in design, fabrication and erection. Some day such levels of quality may be definable, so that the need for the many different piping codes will be overcome.

There are many instances where the Code serves to warn a designer, fabricator, or erector against possible pitfalls; but the Code is not a handbook, and cannot substitute for education, experience, and sound engineering judgment.

Nonmandatory Appendices are included in the Code. Each contains information on a specific subject, and is maintained current with the Code. Although written in mandatory language, these Appendices are offered for application at the user's discretion.

The Code never intentionally puts a ceiling limit on conservatism. A designer is free to specify more rigid requirements as he feels they may be justified. Conversely, a designer who is capable of a more rigorous analysis than is specified in the Code may justify a less conservative design, and still satisfy the basic intent of the Code.

The Power Piping Committee strives to keep abreast of the current technological improvements in new materials, fabrication practices, and testing techniques; and endeavors to keep the Code updated to permit the use of acceptable new developments

## INTRODUCTION

The ASME Code for Pressure Piping consists of a number of individually published Sections, each an American National Standard. Hereafter in this Introduction and in the text of this Code Section B31.1, where the word "Code" is used without specific identification, it means this Code Section.

The Code sets forth engineering requirements deemed necessary for safe design and construction of pressure piping. While safety is the basic consideration, this factor alone will not necessarily govern the final specifications for any piping system. The designer is cautioned that the Code is not a design handbook; it does not do away with the need for the designer or for competent engineering judgment.

To the greatest possible extent, Code requirements for design are stated in terms of basic design principles and formulas. These are supplemented as necessary with specific requirements to assure uniform application of principles and to guide selection and application of piping elements. The Code prohibits designs and practices known to be unsafe and contains warnings where caution, but not prohibition, is warranted.

The specific design requirements of the Code usually revolve around a simplified engineering approach to a subject. It is intended that a designer capable of applying more complete and rigorous analysis to special or unusual problems shall have latitude in the development of such designs and the evaluation of complex or combined stresses. In such cases the designer is responsible for demonstrating the validity of his approach.

This Code Section includes:

(1) references to acceptable material specifications and component standards, including dimensional requirements and pressure−temperature ratings;

(2) requirements for design of components and assemblies, including pipe supports;

(3) requirements and data for evaluation and limitation of stresses, reactions, and movements associated with pressure, temperature changes, and other forces;

(4) guidance and limitations on the selection and application of materials, components, and joining methods;

(5) requirements for the fabrication, assembly, and erection of piping; and

(6) requirements for examination, inspection, and testing of piping.

It is intended that this Edition of Code Section B31.1 and any subsequent Addenda not be retroactive. Unless agreement is specifically made between contracting parties to use another issue, or the regulatory body having jurisdiction imposes the use of another issue, the latest Edition and Addenda issued at least 6 months prior to the original contract date for the first phase of activity covering a piping system or systems shall be the governing document for all design, materials, fabrication, erection, examination, and testing for the piping until the completion of the work and initial operation.

Users of this Code are cautioned against making use of revisions without assurance that they are acceptable to the proper authorities in the jurisdiction where the piping is to be installed.

## SCOPE AND DEFINITIONS

### 100.1 Scope

**100.1.1** This Code prescribes minimum requirements for the design, materials, fabrication, erection, test, and inspection of

Removed by Register October 2005 No. 598. For current adm. code see: http://docs.legis.wisconsin.gov/code/admin_code.



power and auxiliary service piping systems for electric generation stations, industrial and institutional plants, central and district heating plants, and district heating systems, except as limited by para. 100.1.3. These systems are not limited by plant or other property lines unless they are specifically limited in para. 100.1.

Piping as used in this Code includes pipe, flanges, bolting, gaskets, valves, relief devices, fittings, and the pressure containing portions of other piping components, whether manufactured in accordance with Standards listed in Table 126.1 or specially designed. It also includes hangers and supports and other equipment items necessary to prevent overstressing the pressure containing components.

Rules governing piping for miscellaneous appurtenances, such as water columns, remote water level indicators, pressure gages, gage glasses, etc., are included within the scope of this Code, but the requirements for boiler appurtenances shall be in accordance with Section I of the ASME Boiler and Pressure Vessel Code, PG−60.

The users of this Code are advised that in some areas legislation may establish governmental jurisdiction over the subject matter covered by this Code. However, any such legal requirement shall not relieve the owner of his inspection responsibilities specified in para. 136.1.

**100.1.2** Power piping systems as covered by this Code apply to all piping and their component parts within or forming a part of the above−mentioned plants, except as excluded in para. 100.1.3. They include but are not limited to steam, water, oil, gas, and air services.

(A) This Code covers boiler external piping as defined below for power boilers and high temperature, high pressure water boilers in which: steam or vapor is generated at a pressure of more than 15 psig; and high temperature water is generated at pressure exceeding 160 psig and/or temperatures exceeding 250 °F.

Boiler external piping shall be considered as that piping which begins where the boiler proper terminates at:

(1) the first circumferential joint for welding end connections; or

(2) the face of the first flange in bolted flange connections; or

(3) the first threaded joint in that type of connection; and which extends up to and including the valve or valves required by para. 122.1.

The terminal points themselves are considered part of the boiler external piping. The terminal points and piping external to power boilers are illustrated by Figs. 100.1.2(A), 100.1.2(B), and 100.1.2(C).

Piping between the terminal points and the valve or valves required by para. 122.1 shall be provided with Data Reports, inspection, and stamping as required by Section I of the ASME Boiler and Pressure Vessel Code. This piping shall be fabricated and installed by manufacturers or contractors authorized to use the appropriate symbol shown in Figs. PG−105.1 through PG−105.3 of Section I of the ASME Boiler and Pressure Vessel Code. The quality control system requirements of Section I of the ASME Boiler and Pressure Vessel Code shall apply.

The valve or valves required by para. 122.1 are part of the boiler external piping, but do not require ASME Boiler and Pressure Vessel Code, Section I inspection and stamping except for safety, safety relief, and relief valves, see para. 107.8.2. Refer to PG−11.

Pipe connections meeting all other requirements of this Code but not exceeding NPS 1/2 may be welded to pipe or boiler headers without inspection and stamping required by Section I of the ASME Boiler and Pressure Vessel Code.

Nonboiler external piping includes all the piping covered by this Code except for that portion defined above as boiler external piping.

**104.3 Intersections**

**104.3.1 Branch Connections**

(A) This paragraph gives rules governing the design of branch connections to sustain internal and external pressure in cases where the axes of the branch and the run intersect, and the angle between the axes of the branch and of the run is between 45 degrees and 90 degrees, inclusive.

Branch connections in which the smaller angle between the axes of the branch and the run is less than 45 degrees or branch connections where the axes of the branch and the run do not intersect impose special design and fabrication problems. The rules given herein may be used as a guide, but sufficient additional strength must be provided to assure safe service. Such branch connections shall be designed to meet the requirements of para. 104.7.

(B) Branch connections in piping may be made from materials listed in Appendix A by the use of the following:

(B.1) fittings, such as tees, laterals, and crosses made in accordance with the applicable standards listed in Table 126.1 where the attachment of the branch pipe to the fitting is by butt welding, socket welding, brazing, soldering, threading, or by a flange connection;

(B.2) weld outlet fittings, such as cast or forged nozzles, couplings and adapter, or similar items where the attachment of the branch pipe to the fitting is by butt welding, socket welding, threading, or by a flanged connection. Such weld outlet fittings are attached to the run by welding similar to that shown in Fig. 127.4.8(E). Couplings are restricted to a maximum of NPS 3;

(B.3) extruded outlets at right angles to the run pipe, in accordance with (G) below, where the attachment of the branch pipe is by butt welding;

(B.4) piping directly attached to the run pipe by welding in accordance with para. 127.4.8 or by socket welding or threading as stipulated below:

(B.4.1) socket welded right angle branch connections may be made by attaching the branch pipe directly to the run pipe provided:

Removed by Register October 2005 No. 598. For current adm. code see: http://docs.legis.wisconsin.gov/code/admin_code.



(B.4.1.1) the nominal size of the branch does not exceed NPS 2 or one−fourth of the nominal size of the run, whichever is smaller;

(B.4.1.2) the depth of the socket measured at its minimum depth in the run pipe is at least equal to that shown in ANSI B16.11. If the run pipe wall does not have sufficient thickness to provide the proper depth of socket, an alternate type of construction shall be used;

(B.4.1.3) the clearance between the bottom of the socket and the end of the inserted branch pipe is in accordance with Fig. 127.4.4(C);

(B4.1.4) the size of the fillet weld is not less than 1.09 times the nominal wall thickness of the branch pipe.

(B.4.2) threaded right angle branch connections may be made by attaching the branch pipe directly to the run provided:

(B.4.2.1) the nominal size of the branch does not exceed NPS 2 or one−fourth of the nominal size of the run, whichever is smaller;

(B.4.2.2) the minimum thread engagement is: 6 full threads for NPS 1/2 and NPS 3/4 branches; 7 for NPS 1, NPS 1−1/4, and NPS 1 1/2 branches; and 8 for NPS 2 branches. If the run pipe wall does not have sufficient thickness to provide the proper depth for thread engagement, an alternate type of construction shall be used.

(C) *Branch Connections Not Requiring Reinforcement.* A pipe having a branch connection is weakened by the opening that must be made in it. Unless the wall thickness of the branch and/or run pipe is sufficiently in excess of that required to sustain the pressure, it is necessary to provide additional material in order to meet the reinforcement requirements of (D) and (E) below. However, there are certain branch connections for which supporting calculations are not required. These are as follows:

(C.1) branch connections made by the use of a fitting (tee, lateral, cross or branch weld−on fitting), manufactured in accordance with a standard listed in Table 126.1, and used within the limits of pressure−temperature ratings specified in that standard.

(C.2) branch connections made by welding a coupling or half coupling directly to the run pipe in accordance with Fig. 127.4.8(E) provided the nominal diameter of the branch does not exceed NPS 2 or one−fourth the nominal diameter of the run, whichever is less. The minimum wall thickness of the coupling anywhere in the reinforcement zone (if threads are in the zone, wall thickness is measured from the root of the thread to the minimum O.D.) shall not be less than that of the unthreaded branch pipe. In no case shall the thickness of the coupling be less than extra heavy or Class 3000 rating.

Small branch connections NPS 2 or smaller as shown in Fig. 127.4.8(F) may be used provided "$t_w$" is not less than the thickness of schedule 160 pipe of the branch size.

(C.3) integrally reinforced fittings welded directly to the run pipe when the reinforcements provided by the fitting and the deposited weld metal meets the requirements of (D) below.

(C.4) integrally reinforced extruded outlets in the run pipe. The reinforcement requirements shall be in accordance with (G) below.

(D) *Branch Connections Subject to Internal Pressure Requiring Reinforcement.*

(D.1) Reinforcement is required when it is not provided inherently in the components of the branch connection.

## PART 6
## SYSTEMS

### 122 DESIGN REQUIREMENTS PERTAINING TO SPECIFIC PIPING SYSTEMS

Except as specifically stated otherwise in this Part 6, all provisions of the Code apply fully to the piping systems described herein.

### 122.1 Boiler External Piping; in Accordance With Para. 100.1.2 (A) − Steam, Feedwater, Blowoff, and Drain Piping

**122.1.1 General.** The minimum pressure and temperature and other special requirements to be used in the design for steam, feedwater, blowoff, and drain piping from the boiler to the valve or valves required by para. 122.1 shall be as specified in the following paragraphs. Design requirements for desuperheater spray piping connected to desuperheaters located in the boiler proper are provided in para. 122.4.

(A) It is intended that the design pressure and temperature be selected sufficiently in excess of any expected operating conditions, not necessarily continuous, to permit satisfactory operation without operation of the overpressure protection devices. Also, since the operating temperatures of fired equipment can vary, the expected temperature at the connection to the fired equipment shall include the manufacturer's maximum temperature tolerance.

(B) In a forced flow steam generator with no fixed steam and waterline, it is permissible to design the external piping, valves, and fittings attached to the pressure parts for different pressure levels along the path through the steam generator of water−steam flow. The values of design pressure and the design temperature to be used for the external piping, valves, and fittings shall be not less than that required for the expected maximum sustained operating pressure and temperature to which the abutted pressure part is subjected except when one or more of the overpressure protection devices covered by PG−67.4 of Section I of the ASME Boiler and Pressure Vessel Code is in operation. The steam piping shall comply with the requirements for the maximum sustained operating conditions as used in (A) above, or for the design throttle pressure plus 5%, whichever is greater.

(C) Provision shall be made for the expansion and contraction of piping connected to boilers to limit forces and moments transmitted to the boiler, by providing substantial anchorage at suitable points, so that there shall be no undue strain transmitted to the boiler. Steam reservoirs shall be used on steam mains when heavy pulsations of the steam currents cause vibration.

(D) Piping connected to the outlet of a boiler for any purpose shall be attached by:

(D.1) welding to a nozzle or socket welding fitting;

Removed by Register October 2005 No. 598. For current adm. code see: http://docs.legis.wisconsin.gov/code/admin_code.



(D.2) threading into a tapped opening with a threaded fitting or valve at the other end;

(D.3) screwing each end into tapered flanges, fittings, or valves with or without rolling or peening;

(D.4) bolted joints including those of the Van Stone type;

(D.5) blowoff piping of firetube boilers shall be attached in accordance with (D.2) above if exposed to products of combustion or in accordance with (D.2), (D.3), or (D.4) above if not so exposed.

(E) Nonferrous pipe or tubes shall not exceed NPS 3 in diameter.

(F) American National Standard slip−on flanges shall not exceed NPS 4. Attachment of slip−on flanges shall be by double fillet welds. The throats of the fillet welds shall not be less than 0.7 times the thickness of the part to which the flange is attached.

(G) Hub−type flanges shall not be cut from plate material.

(H) American National Standard socket welded flanges may be used in piping or boiler nozzles provided the dimensions do not exceed NPS 3 for class 600 and lower and NPS 2 1/2 in class 1500.

**122.1.2 Steam Piping**

(A) The value of P to be used in the formulas in para. 104 shall be as follows.

(A.1) For steam piping connected to the steam drum or to the superheater inlet header up to the first stop valve in each connection, the value of P shall be not less than the lowest pressure at which any drum safety valve is set to blow, and the S value shall not exceed that permitted for the corresponding saturated steam temperature.

(A.2) For steam piping connected to the superheater outlet header up to the first stop valve in each connection, the design pressure, except as otherwise provided in (A.4) below, shall be not less than the lowest pressure at which any safety valve on the superheater is set to blow, or not less than 85% of the lowest pressure at which any drum safety valve is set to blow, whichever is greater, and the S value for the material used shall not exceed that permitted for the expected steam temperature.

(A.3) For steam piping between the first stop valve and the second valve, when one is required by para. 122.1.7, the design pressure shall be not less than the expected maximum sustained operating pressure or 85% of the lowest pressure at which any drum safety valve is set to blow, whichever is greater, and the S value for the material used shall not exceed that permitted for the expected steam temperature.

(A.4) For boilers installed on the unit system (i.e., one boiler and one turbine or other prime mover) and provided with automatic combustion control equipment responsive to steam header pressure, the design pressure for the steam piping shall be not less than the design pressure at the throttle inlet plus 5%, or not less than 85% of the lowest pressure at which any drum safety valve is set to blow, or not less than the expected maximum sustained operating pressure at any point in the piping system, whichever is greater, and the S value for the material used shall not exceed that permitted for the expected steam temperature at the superheater outlet. For forced−flow steam generators with no fixed steam and waterline, the design pressure shall also be no less than the expected maximum sustained operating pressure.

(A.5) The design pressure shall not be taken at less than 100 psig for any condition of service or material.

**122.1.3 Feedwater Piping**

(A) The value of P to be used in the formulas in para. 104 shall be as follows.

(A.1) For piping from the boiler to and including the required stop valve and the check valve, the minimum value of P except as permitted in para. 122.1.3(A.4) shall exceed the maximum allowable working pressure of the boiler by either 25% or 225 psi, whichever is the lesser. For an installation with an integral economizer without valves between the boiler and economizer, this paragraph shall apply only to the piping from the economizer inlet header to and including the required stop valve and the check valve.

(A.2) For piping between the required check valve and the globe or regulating valve, when required by para. 122.1.7(B), and including any bypass piping up to the shutoff valves in the bypass, the value of P shall be not less than the pressure required to feed the boiler.

(A.3) The value of P in the formula shall not be taken at less than 100 psig for any condition of service or material, and shall never be less than the pressure required to feed the boiler.

(A.4) In a forced flow steam generator with no fixed steam and waterline, the value of P for feedwater piping from the boiler to and including the required stop valve may be in accordance with the requirements of para. 122.1.1(B).

(B) The S value used, except as permitted in (A.4) above, shall not exceed that permitted for the temperature of saturated steam at the maximum allowable working pressure of the boiler.

(C) The size of the feed piping between the boiler and the first required valve [para. 122.1.7(B)] or the branch feed connection [para. 122.1.7(B.4)] shall, as a minimum, be the same as the boiler connection.

**122.1.4 Blowoff and Blowdown Piping.** Blowoff and blowdown piping are defined as piping connected to a boiler and provided with valves or cocks through which the water in the boiler may be blown out under pressure. This definition is not intended to apply to (i) drain piping, and (ii) piping such as used on water columns, gage glasses, or feedwater regulators, etc., for the purpose of determining the operating condition of the equipment. Requirements for (i) and (ii) are described in paras. 122.1.5 and 122.1.6. Blowoff systems are operated intermittently to remove accumulated sediment from equipment and/or piping, or to lower boiler water level in a rapid manner. Blowdown systems are primarily operated continuously to control the concentrations of dissolved solids in the boiler water.

(A) Blowoff piping systems from water spaces of a boiler, up to and including the blowoff valves, shall be designed in accordance with (A.1) to (A.4) below. Two shutoff valves are required in the blowoff system; specific valve requirements and exceptions are given in para. 122.1.7(C).

Removed by Register October 2005 No. 598. For current adm. code see: http://docs.legis.wisconsin.gov/code/admin_code.



(A.1) The value of P to be used in the formulas in para. 104 shall exceed the maximum allowable working pressure of the boiler by either 25% or 225 psi, whichever is less, but shall not be less than 100 psig.

(A.2) The allowable stress value for the piping materials shall not exceed that permitted for the temperature of saturated steam at the maximum allowable working pressure of the boiler.

(A.3) All pipe shall be steel. Galvanized steel pipe and fittings shall not be used for blowoff piping. When the value of P does not exceed 100 psig, the fittings shall be bronze, cast iron, malleable iron, ductile iron, or steel. When the value of P exceeds 100 psig, the fittings shall be steel and the thickness of pipe and fittings shall not be less than that of Schedule 80 pipe.

(A.4) The size of blowoff piping shall be not less than the size of the connection on the boiler, and shall be in accordance with the rules contained in the ASME Boiler and Pressure Vessel Code, Section I, PG−59.3 and PEB−12.

(B) The blowdown piping system from the boiler, up to and including the shutoff valve, shall be designed in accordance with (B.1) through (B.4) below. Only one shutoff valve is required in the blowdown system.

(B.1) The value of P to be used in the formulas in para. 104 shall be not less than the lowest set pressure of any safety valve on the boiler drum.

(B.2) The allowable stress value for the piping materials shall not exceed that permitted for the temperature of saturated steam at the maximum allowable working pressure of the boiler.

(B.3) All pipe shall be steel. Galvanized steel pipe and fitting shall not be used for blowdown piping. When the value of P does not exceed 100 psig, the fittings shall be bronze, cast iron, malleable iron, ductile iron, or steel. When the value of P exceeds 100 psig, the fittings shall be steel and the thickness of pipe and fittings shall not be less than that of Schedule 80 pipe.

(B.4) The size of blowdown piping shall be not less than the size of the connection on the boiler, and shall be in accordance with the rules contained in the ASME Boiler and Pressure Vessel Code, Section I, PG−59.3.

(C) The blowoff and blowdown piping beyond the required valves described in (A) and (B) above are classified as nonboiler external piping. The requirements are given in para. 122.2.

**122.1.5 Boiler Drains**

(A) Complete drainage of the boiler and attached piping shall be provided to the extent necessary to ensure proper operation of the steam supply system. The pipe, fittings, and valves of any drain line shall not be smaller than the drain connection.

(B) If the drain lines are intended to be used both as drains and as blowoffs, then two valves are required and all conditions of paras. 122.1.4, 122.1.7(C), and 122.2 shall be met.

(C) When a drain is intended for use only when the boiler is not under pressure (pressurizing the boiler for rapid drainage is an exception), a single shutoff valve is acceptable under the following conditions: either the valve shall be a type that can be locked in the closed position or a suitable flanged and bolted connection that accepts a blank insert shall be located on the downstream side of the valve. When a single valve is used, it need not be designed for blowoff service.

(D) Drain piping from the drain connection, including the required valve(s) or the blanked flange connection, shall be designed for the temperature and pressure of the drain connection. The remaining piping shall be designed for the expected maximum temperature and pressure. Static head and possible choked flow conditions shall be considered. In no case shall the design pressure and temperature be less than 100 psig and 220° F, respectively.

**122.1.6 Boiler External Piping − Miscellaneous Systems**

(A) Materials, design, fabrication, examination, and erection of piping for miscellaneous accessories, such as water level indicators, water columns, gage cocks, and pressure gages, shall be in accordance with the applicable sections of this Code.

(B) The value of P to be used in the formulas in para. 104 shall be not less than the maximum allowable working pressure of the boiler except as provided by para. 122.1.1(B).

(C) Valve requirements for water level indicators or water columns, special gage glass and gage cock requirements, minimum line sizes, and special piping configurations required specifically for cleaning, access, or reliability shall be in accordance with PG−60 of Section I of the ASME Boiler and Pressure Vessel Code.

**122.1.7 Valves and Fittings.** The minimum pressure and temperature rating for all valves and fittings in steam, feedwater, blowoff, and miscellaneous piping shall be equal to the pressure and temperature specified for the connected piping on the side that has the higher pressure, except that in no case shall the pressure be less than 100 psig, and for pressures not exceeding 100 psig in feedwater and blowoff service, the valves and fittings shall be equal at least to the requirements of the ASME for Class 125 cast iron or Class 150 steel.

(A) *Steam Stop Valves.* Each boiler discharge outlet, except safety valve or safety relief valve connections, or reheater inlet and outlet connections, shall be fitted with a stop valve located at an accessible point in the steam−delivery line and as near to the boiler nozzle as is convenient and practicable.

(A.1) Boiler stop valves shall provide bidirectional shutoff at design conditions. The valve or valves shall meet the requirements of para. 107. Valves with resilient (nonmetallic) seats shall not be used where the boiler maximum allowable working pressure exceeds 150 psig or where the system design temperature exceeds 366° F. Valves of the outside screw and yoke, rising stem style are preferred. Valves other than those of the outside screw and yoke, rising stem style shall meet the following additional requirements.

(A.1.A) Each valve shall be equipped with a position indicator to visually indicate from a distance whether the valve is open or closed.

(A.1.B) Quarter turn valves shall be equipped with a slow operating mechanism to minimize dynamic loadings on the boiler and attached piping.

(A.2) In the case of a single boiler and prime mover installation, the stop valve required herein may be omitted provided the prime mover throttle valve is equipped with an indicator to show

Removed by Register October 2005 No. 598. For current adm. code see: http://docs.legis.wisconsin.gov/code/admin_code.



whether it is opened or closed, and it is designed to withstand the required boiler hydrostatic test.

(A.3) When boilers are connected to a common header, the connection from each boiler having a manhole opening shall be fitted with two stop valves having an ample free−blow drain between them. The preferred arrangement consists of one stop−check valve (located closest to the boiler) and one valve of the style and design described in (A.1) above. Alternatively, both valves may be of the style and design described in (A.1) above.

When a second stop valve is required, it shall have a pressure rating at least equal to that required for the expected steam pressure and temperature at the valve, or a pressure rating at least equal to 85% of the lowest set pressure of any safety valve on the boiler drum at the expected temperature of the steam at the valve, whichever is greater.

(A.4) All valves and fittings on steam lines shall have a pressure rating of at least 100 psig in accordance with the applicable ASME Standard.

(B) *Feedwater Valves*

(B.1) The feedwater piping for all boilers, except for high temperature water boilers complying with the requirements of (B.8) below, and for forced flow steam generators with no fixed steam and water line complying with the requirements of (B.9) below, shall be provided with a check valve and a stop valve or cock between the check valve and the boiler. The stop valve or cock shall comply with the requirements of (C.5) below.

(B.2) The relative locations of the check and stop (or cock) valves, as required in (B.1) above, may be reversed on a single boiler−turbine unit installation.

(B.3) If a boiler is equipped with a duplicate feed arrangement, each such arrangement shall be equipped as required by these rules.

(B.4) When the supply line to a boiler is divided into branch feed connections and all such connections are equipped with stop and check valves, the stop and check valves in the common source may be omitted.

(B.5) When two or more boilers are fed from a common source, there shall also be a globe or regulating valve in the branch to each boiler located between the check valve and the source of supply. A typical arrangement is shown in Fig. 100.1.2(B). Wherever globe style valves are used on feed piping, the inlet shall be under the disk of the valve.

(B.6) A combination stop and check valve in which there is only one seat and disk, and in which a valve stem is provided to close the valve, shall be considered only as a stop valve, and a check valve shall be installed as otherwise provided.

(B.7) Where an economizer or other feedwater heating device is connected directly to the boiler without intervening valves, the feed valves and check valves required shall be placed on the inlet of the economizer or feedwater heating device.

(B.8) The recirculating return line for a high temperature water boiler shall be provided with the same stop valve, or valves, required by (B.1) and (B.3) above. The use of a check valve in the recirculating return line is optional. A check valve shall not be a substitute for a stop valve.

(B.9) The feedwater boiler external piping for a forced flow steam generator with no fixed steam and water line may terminate up to and including the stop valve(s) and omitting the check valve(s) provided that a check valve having a pressure rating no less than the boiler inlet design pressure is installed at the discharge of each boiler feed pump or elsewhere in the feedline between the feed pump and the stop valve(s).

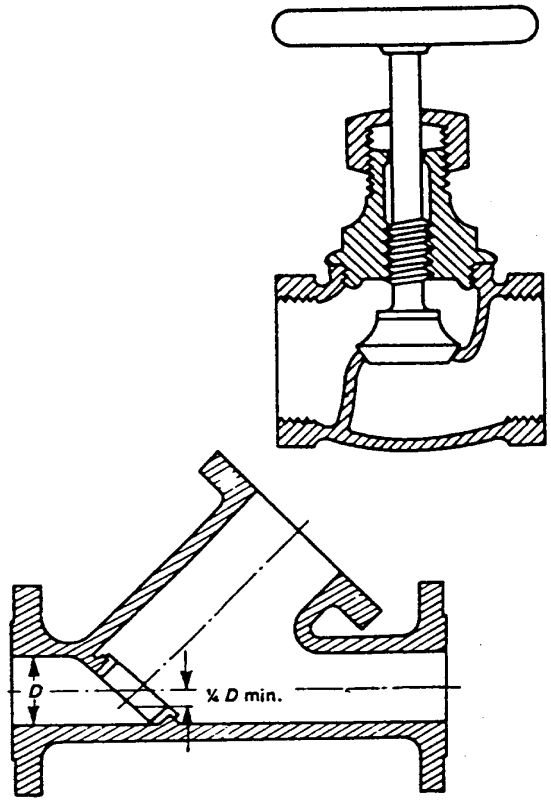


FIG. 122.1.7(C)TYPICAL GLOBE VALVES

(C) *Blowoff Valves*

(C.1) Ordinary globe valves as shown in Fig. 122.1.7(C) sketch (1), and other types of valves that have dams or pockets where sediment can collect, shall not be used on blowoff connections.

(C.2) Y−type globe valves as shown in Fig. 122.1.7(C) sketch (2) or angle valves may be used in vertical pipes, or they may be used in horizontal runs of piping provided they are so constructed or installed that the lowest edge of the opening through the seat is at least 25% of the inside diameter below the center line of the valve.

(C.3) The blowoff valve or valves, the pipe between them, and the boiler connection shall be of the same size except that a larger pipe for the return of condensate may be used.

(C.4) For all boilers [except electric steam boilers having a normal water content not exceeding 100 gal, traction−purpose, and portable steam boilers; see (C.11) and (C.12) below] with

Removed by Register October 2005 No. 598. For current adm. code see: http://docs.legis.wisconsin.gov/code/admin_code.



allowable working pressure in excess of 100 psig, each bottom blowoff pipe shall have two slow−opening valves, or one quick−opening valve or cock, at the boiler nozzle followed by a slow−opening valve. All valves shall comply with the requirements of (C.5) and (C.6) below.

(C.5) When the value of P required by para. 122.1.4(A.1) does not exceed 250 psig, the valves or cocks shall be bronze, cast iron, ductile iron, or steel. The valves or cocks, if of cast iron, shall not exceed NPS 2 1/2 and shall meet the requirements of the applicable ASME Standard for Class 250, as given in Table 126.1, and if of bronze, steel, or ductile iron construction, shall meet the requirements of the applicable standards as given in Table 126.1 or para. 124.6.

(C.6) When the value of P required by para. 122.1.4(A.1) is higher than 250 psig, the valves or cocks shall be of steel construction equal at least to the requirements of Class 300 of the applicable ASME Standard listed in Table 126.1. The minimum pressure rating shall be equal to the value of P required by para. 122.1.4(A.1).

(C.7) If a blowoff cock is used, the plug shall be held in place by a guard or gland. The plug shall be distinctly marked in line with the passage.

(C.8) A slow−opening valve is a valve which requires at least five 360 deg. turns of the operating mechanism to change from fully closed to fully opened.

(C.9) On a boiler having multiple blowoff pipes, a single master valve may be placed on the common blowoff pipe from the boiler, in which case only one valve on each individual blowoff is required. In such a case, either the master valve or the individual valves or cocks shall be of the slow−opening type.

(C.10) Two independent slow−opening valves, or a slow−opening valve and a quick−opening valve or cock, may be combined in one body and may be used provided the combined fitting is the equivalent of two independent slow−opening valves, or a slow−opening valve and a quick−opening valve or cock, and provided further that the failure of one to operate cannot affect the operation of the other.

(C.11) Only one blowoff valve, which shall be either a slow−opening or quick−opening blowoff valve or a cock, is required on traction and/or portable boilers.

(C.12) Only one blowoff valve, which shall be of a slow−opening type, is required on forced circulation and electric steam boilers having a normal water content not exceeding 100 gal.

(D) *Safety Valves*

(D.1) Safety valves, relief valves, and safety relief valves shall conform to the requirements of PG−67, PG−68, PG−69, PG−70, PG−71, PG−72, and PG−73 of Section I of the ASME Boiler and Pressure Vessel Code.

**122.2 Blowoff and Blowdown Piping in Nonboiler External Piping**

(A) *From Boilers*

(A.1) Blowoff piping, located between the valves described in para. 122.1.4(A) and the blowoff tank or other point where the pressure is reduced approximately to atmospheric pressure and cannot be increased by closing a valve, shall be designed for saturated steam at the appropriate pressure and temperature in accordance with Table 122.2. The provisions of para. 122.1.4(A.3) shall apply.

TABLE 122.2

| Boiler or Vessel Pressure, psig | Design Pressure, psig | Design Temperature, °F |
|---|---|---|
| Below 250 | Note (1) | −− |
| 250−600 | 250 | 410 |
| 601−900 | 400 | 450 |
| 901−1500 | 600 | 490 |
| 1501 and higher | 900 | 555 |

**Note:** (1) For boiler or vessel pressure(s) below 250 psig, the design pressure shall be determined in accordance with para. 122.1.4(B.1) but need not exceed 250 psig.

(A.2) Blowdown piping, located after the valve described in para. 122.1.4(B) in which the pressure cannot be increased by closing a valve, shall be designed for the appropriate pressure and temperature in accordance with Table 122.2. The provisions of para. 122.1.4(B.3) shall apply.

(A.3) When design pressure of Table 122.2 can be exceeded due either to closing of a downstream valve, calculated pressure drop, or other means, the entire blowoff piping system shall be designed in accordance with para. 122.1.4(A) or (B), respectively.

(B) *From Pressure Vessels Other Than Boilers*

(B.1) The design pressure and temperature of the blowoff piping from the pressure vessel to and including the blowoff valve(s) shall not be less than the vessel design conditions.

**122.6 Pressure Relief Piping**

Pressure relief piping within the scope of this Code shall be supported to sustain reaction forces, and shall conform to the following requirements.

**122.6.1 Piping to Pressure−Relieving Safety Devices**

(A) There shall be no intervening stop valve(s) between piping being protected and the protective device(s).

(B) Diverter or changeover valves designed to allow servicing of redundant protective devices without system depressurization may be installed between the piping to be protected and the required protective devices under the following conditions.

(B.1) Diverter or changeover valves are prohibited on boiler external piping or reheat piping.

(B.2) One hundred percent of the required relieving capacity shall be continuously available any time the system is in service.

(B.3) Positive position indicators shall be provided on diverter or changeover valves.

(B.4) Positive locking mechanisms and seals shall be provided on diverter or changeover valves to preclude unauthorized or accidental operation.

Removed by Register October 2005 No. 598. For current adm. code see: http://docs.legis.wisconsin.gov/code/admin_code.



(B.5) Diverter or changeover valves shall be designed for the most severe conditions of pressure, temperature, and loading to which they are exposed, and shall be in accordance with para. 107.

(B.6) Provision shall be made to safely bleed off the pressure between the isolated protective device and the diverter or changeover valve.

**122.6.2 Discharge Piping From Pressure Relieving Safety Devices**

(A) There shall be no intervening stop valve between the protective device or devices and the point of discharge.

(B) When discharging directly to the atmosphere, discharge shall not impinge on the piping or equipment and shall be directed away from platforms and other areas used by personnel.

(C) It is recommended that individual discharge lines be used, but if two or more reliefs are combined, the discharge piping shall be designed with sufficient flow area to prevent blowout of steam or other fluids. Sectional areas of a discharge pipe shall not be less than the full area of the valve outlets discharging thereinto and the discharge pipe shall be as short and straight as possible and so arranged as to avoid undue stresses on the valve or valves.

(D) Discharge lines from pressure−relieving safety devices within the scope of this Code shall be designed to facilitate drainage.

(E) When the umbrella or drip pan type of connection is used, the discharge piping shall be so designed as to prevent binding due to expansion movements.

(F) Drainage shall be provided to remove water collected above the safety valve seat.