Removed by Register March 2015 No. 711. For current adm. code see: http://docs.legis.wisconsin.gov/code/admin_code.

Chapter NR 812

WELL CONSTRUCTION AND PUMP INSTALLATION

Subchapter I — General
NR 812.01 Purpose.
NR 812.02 Applicability.
NR 812.03 Cooperation with the department.
NR 812.04 Contracts for noncomplying installations.
NR 812.05 Disposal of pollutants; injection prohibition.
NR 812.06 Drinking water standards.
NR 812.07 Definitions.
NR 812.08 Water well, heat exchange drillhole, reservoir and spring location.
NR 812.09 Department approvals.

Subchapter II — New Water Well and Heat Exchange Drillhole Construction and Reconstruction and Filling and Sealing of Wells and Drillholes
NR 812.10 Well and heat exchange driller and well constructor requirements.
NR 812.11 Well and heat exchange drillhole construction equipment & materials.
NR 812.12 General drilled type well and heat exchange drillhole construction requirements.
NR 812.13 Drilled wells terminating in unconsolidated formations i.e., usually sand or gravel or both.
NR 812.14 Drilled wells in bedrock formations.
NR 812.15 Flowing wells.
NR 812.16 Gravel−pack well construction.
NR 812.17 Well casing and heat exchange pipe, liner pipe and materials.
NR 812.18 Welding procedures.
NR 812.19 Well plumbness and alignment.
NR 812.20 Grouting and sealing.
NR 812.21 Liners.
NR 812.22 Finishing operations.
NR 812.23 Driven point (sand/point) wells.
NR 812.24 Dug type well design and construction.
NR 812.25 Springs.
NR 812.26 Well and drillhole filling and sealing.

Subchapter III — Requirements for New Pump Installations and Water Treatment
NR 812.27 Pump installer requirements.
NR 812.28 Pump installation equipment and supply pipe.
NR 812.29 Height of finished well.
NR 812.30 Vermin−proof well caps and seals.
NR 812.31 Pitless adapters and pitless units.
NR 812.32 Pumps.
NR 812.33 Water storage vessels.
NR 812.34 Sample faucets.
NR 812.35 Yard hydrants.
NR 812.36 Pits.
NR 812.37 Water treatment.
NR 812.38 Injection of fertilizers or pesticides for agricultural purposes.
NR 812.39 High capacity well water level and water usage measurement.
NR 812.40 Above ground pumphouses.
NR 812.41 Disinfection, flushing and sampling.

Subchapter IV — Standards for Existing Installations
NR 812.42 Criteria for evaluation.

Subchapter V — Variances
NR 812.43 Variances.

Subchapter VI — Property Transfer Well Inspections.
NR 812.44 Property Transfer Well Inspections.

Subchapter VII — Citations
NR 812.45 Citations.

Note: Chapter NR 112 as it existed on September 30, 1975 was repealed and a new Chapter NR 112 was created effective October 1, 1975. Chapter NR 112 as it existed on January 31, 1991 was repealed and a new Chapter NR 112 was created effective February 1, 1991; Chapter NR 112 was renumbered Chapter NR 812 under s. 13.93 (2m) (b) 1., Stats., Register, September, 1994, No. 465.

Subchapter I — General

NR 812.01 Purpose. (1) The purpose of this chapter is to establish uniform minimum standards and methods in conformity with chs. 280 and 281, Stats., for:

(a) Obtaining or extracting groundwater for any purpose; and

(b) Protecting groundwater and aquifers from contamination through adequate construction and reconstruction of water systems.

(c) Evaluating, locating, and identifying wells and pressure systems at the time of a property transfer.

(2) This chapter shall govern the location, construction or reconstruction, maintenance and inspection of wells and water systems and heat exchange drillholes, the filling and sealing of wells and drillholes and the installation and maintenance of pumping and treatment equipment.

History: Cr. Register, January, 1991, No. 421, eff. 2−1−91; am. (1) (a), Register, September, 1994, No. 465, eff. 10−1−94; correction in (1) (intro.) made under s. 13.93 (2m) (b) 7., Stats., Register, December, 1998, No. 516; **CR 13−099: cr. (1) (c), am. (2) Register September 2014 No. 705, eff. 10−1−14.**

NR 812.02 Applicability. (1) For the purposes of construction and installation, the provisions of this chapter apply to all new and existing water systems and drillholes with the following exceptions:

(a) Wells governed under ch. NR 141, unless they are high capacity wells, in which case ch. NR 812 also applies.

(b) Any community water system governed under chs. NR 809, 810, and 811.

(c) Nonpotable surface water systems.

Note: Certain diversions of surface water for nonpotable uses require a permit under ch. 30, Stats.

(2) For the purposes of filling and sealing, the provisions of this chapter apply to all drillholes and wells including, but not limited to, elevator shaft drillholes, unsuccessful or noncomplying heat exchange drillholes, mining exploration drillholes not regulated by ch. NR 132 and wells and drillholes not regulated by s. NR 141.25.

(3) For the purposes of the prohibition of the underground placement of any substance as defined in s. 160.01 (8), Stats., the provisions of this chapter apply to all wells and drillholes.

Note: Private water systems and noncommunity water systems, located in counties delegated authority to administer this chapter under ch. NR 845, are subject to county permit requirements.

History: Cr. Register, January, 1991, No. 421, eff. 2−1−91; am. (1) (a) and (2), cr. (3), Register, September, 1994, No. 465, eff. 10−1−94; correction in (1) (a) and (b) made under s. 13.93 (2m) (b) 7., Stats., Register, September, 1994, No. 465; **CR 13−099: am. (1) (b), (2) Register September 2014 No. 705, eff. 10−1−14.**

NR 812.03 Cooperation with the department. (1) Well drillers, pump installers and well constructors shall, when requested by the department, give notice to the department, as specified in the notice of request, at least on the department work day prior to the day upon which any well construction or reconstruction or any part thereof, any well filling and sealing operation or the installation of any pumping equipment, will be commenced. Heat exchange drillers shall notify the department no less than one work day prior to constructing or reconstructing a heat exchange drillhole.

(3) Well and heat exchange drillers and well constructors shall contact the department to determine if any special construction is required if the well or heat exchange driller or well constructor proposes to construct or reconstruct a well or heat exchange drillhole on a property that is located within the service area of a municipally owned water system.

(4) Well and heat exchange drillers and well constructors shall, when requested by the department, contact the department to determine if any special construction is required if the well or heat exchange driller or well constructor is engaged to construct

Removed by Register March 2015 No. 711. For current adm. code see: http://docs.legis.wisconsin.gov/code/admin_code.

a new well or heat exchange drillhole or reconstruct an existing well because the existing well or heat exchange drillhole is known to contain contaminants in excess of the drinking water standards in ch. NR 809.

Note: The Department of Natural Resource's GIS Registry of Closed Remediation Sites has been renamed (GIS Registry) and reformatted. The information about sites with residual contamination and continuing obligations can now be found at http://dnr.wi.gov/topic/Brownfields/clean.html. This web page includes links to both the tracking system and map view. The information about a specific site can be found in the Bureau for Remediation and Redevelopment Tracking System (BRRTS) on the Web. A map view of sites on the GIS Registry layer can be found on RR Sites Map.

(5) Heat exchange drillers shall contact the local water supply utility in order to determine whether the project is located within a wellhead protection area or within 400 feet of a municipal well.

History: Cr. Register, January, 1991, No. 421, eff. 2−1−91; correction in (2) made under s. 13.93 (2m) (b) 7., Stats., Register, September, 1994, No. 465; CR 00−111: am., Register October 2001 No. 550, eff. 11−1−01; **CR 13−096: am (1), (3), (4), cr. (5), CR 13−099: am. (1), r. (2) Register September 2014 No. 705, eff. 10−1−14.**

NR 812.04 Contracts for noncomplying installations. (1) Well and heat exchange drillers, pump installers and well constructors shall ensure that the construction and reconstruction of wells, heat exchange drillholes or the installation of pumping equipment adheres to all the applicable provisions of this chapter or to approved comparable construction or installation requirements. Well and heat exchange drillers, pump installers and well constructors may not enter into any agreement, written or oral, for construction, reconstruction or installation which does not require compliance with the applicable provisions of this chapter or with approved comparable construction or installation requirements.

(2) When there is any construction, reconstruction or equipment installation on a noncomplying feature, the feature shall be upgraded and brought into compliance with the specifications in this chapter for new construction. The well driller or pump installer shall inform the water system owner or user of the water system of other noncomplying features, that are apparent and known, in writing on a department form. A copy of the form shall be filed with the department by the well driller, pump installer or by the water system owner or user within 10 days after the initial evaluation of the water system has been completed if the required repairs are not made.

History: Cr. Register, January, 1991, No. 421, eff. 2−1−91; am. (2), Register, September, 1994, No. 465, eff. 10−1−94; **CR 13−096: am. (1) Register September 2014 No. 705, eff. 10−1−14.**

NR 812.05 Disposal of pollutants; injection prohibition. (1) For the purposes of this section:

(a) "Drillhole" includes any excavation or opening that is deeper than it is wide, even if it extends less than 10 feet below the ground surface.

(b) "Well" includes any excavation that is deeper than it is wide regardless of the excavation's depth or purpose.

(2) The use of any well, drillhole or water system for the placement of any waste, surface or subsurface water or any substance, as defined in s. 160.01 (8), Stats., underground is prohibited unless any of the following apply:

(a) The placement is a department−approved activity necessary for any of the following:

1. The construction, rehabilitation or operation of a well, drillhole or water system.

2. The construction of a cathodic protection drillhole approved under s. NR 812.09.

3. The remediation of contaminated soil, groundwater or an aquifer.

4. The study of groundwater conditions under sub. (4).

(b) The placement consists of grouting, sealing or filling and sealing materials as specified in s. NR 812.20 or 812.26; grouting or filling and sealing materials as specified in s. NR 811.13; annular space sealing or filling and sealing materials specified in s. NR 141.13 or 141.25; or other similar materials containing additives approved under sub. (3).

(c) The placement consists of bentonite grout, cement or concrete, or other similar materials containing additives approved under sub. (3), for the purposes of soil or excavation site stabilization, tunnel support, underpinning or foundation strengthening, groundwater control or diversion or for limiting structural settlement.

(3) The department may approve alternative materials or additives that are to be used in conjunction with the activities noted under sub. (2). Approval shall be based on, but not limited to, such factors as the potential toxicity of an alternative material or additive, the effectiveness of an alternative material or additive for its specified use, the amount or quantity of material to be used, and the potential for use of an alternative material to result in groundwater contamination or otherwise harm human health or the environment.

(4) Only department approved groundwater tracers may be used for hydrogeologic studies. Approval shall be based on, but not limited to, such factors as the potential toxicity of a tracer, the effectiveness of a tracer for its use as specified in an application for approval, and the potential for use of a tracer to result in groundwater contamination or otherwise harm human health or the environment. A list of previously approved groundwater tracers is available from the department upon request.

(5) The following activities are not prohibited by this section:

(a) Circulation of water or a food−grade heat exchange fluid through a closed−loop heat pump system in a drillhole.

(b) Construction of a structure such as, but not limited to, a building foundation, support footing, elevator shaft, lift station, utility conduit, sump, mine shaft or equipment vault.

(c) Except for the disposal of a waste material, the placement of a solid object such as, but not limited to, a cathodic protection device, coffin, piling, pole or post.

(d) Horticultural or agricultural practices, other than those activities that involve the use of a well or drillhole for the placement of a waste material or drainage water underground.

(e) Injection activities conducted in conjunction with a metallic mineral mining operation approved under ch. NR 132.

History: Cr. Register, January, 1991, No. 421, eff. 2−1−91; am. Register, September, 1994, No. 465, eff. 10−1−94; am. Register, May, 2000, No. 533, eff. 6−1−00; **CR 13−099: am. (2) (b) Register September 2014 No. 705, eff. 10−1−14.**

NR 812.06 Drinking water standards. Private or non−community water systems producing water containing contaminant levels in excess of the primary drinking water standards contained in ch. NR 809, the enforcement standards contained in ch. NR 140, or other advisory levels identified by the department may be designated by the department as contaminated.

History: Cr. Register, January, 1991, No. 421, eff. 2−1−91; correction made under s. 13.93 (2m) (b) 7., Stats., Register, September, 1994, No. 465.

NR 812.07 Definitions. The following terms are defined as follows:

(1) "Adequate water supply" means a water supply which has a well yield and the pump capacity to provide the quantity and quality, where obtainable, according to s. NR 812.06, of water necessary for human or sanitary use, or for the preparation of food products and other purposes for which the water is intended to be used.

(1d) "Advance notification" means notification to the department via fax, e−mail or telephone at least one working day before commencing any work.

(1h) "Agricultural crop field" means land where there is evidence that agricultural crops were or are being grown.

(1p) "Air−gap" means the unobstructed vertical distance through the free atmosphere between the lowest opening from any pipe or faucet supplying water to a tank or plumbing fixture and the flood level rim or spill level of the receptacle.

Removed by Register March 2015 No. 711. For current adm. code see: http://docs.legis.wisconsin.gov/code/admin_code.

(1t) "Animal barn" means a covered, paved or unpaved area in which animals are kept. This includes an area where an individual animal is kept, but does not include a single pet house or single pet kennel housing 5 or fewer adult pets on a residential lot.

(2) "Animal barn pen" means a covered, enclosed concrete area where animals are kept.

(3) "Animal yard" means an uncovered, paved or unpaved area in which animals are kept. This includes an area where an individual animal is kept, but does not include a single pet kennel enclosing 5 or fewer adult pets on a residential lot. An animal yard includes any fenced area where animals are kept or have access including pastures, feed lots, pens, calf hutches, lanes, and riding corrals.

(4) "Animal shelter" means a covered, paved or unpaved area in which animals are kept. This includes an area where an individual animal is kept, but does not include a single pet house or single pet kennel housing 5 or fewer adult pets on a residential lot.

(5) "Annular space" means the space between 2 concentric cylinders or circular objects, such as the space between an upper enlarged drillhole and a well casing pipe.

(6) "API" means the American Petroleum Institute.

Note: The API address is 1220 L Street NW, Washington DC 20005−4070.

(7) "Approval" means the prior approval of the department.

(8) "Approved" means approved by the department.

(9) "ASSE" means American society of sanitary engineering.

(10) "ASTM" or "ASTM International" means the organization formerly known as the American Society for Testing and Materials.

Note: The ASTM or ASTM International address is 100 Barr Harbor Drive, PO Box C700, West Conshohocken, Pennsylvania 19148−2959.

(10m) "AWWA" means the American Water Works Association.

Note: The AWWA address is 6666 West Quincy Avenue, Denver, Colorado 80235.

(11) "Aquifer" means a geological layer of either unconsolidated material, usually sand or gravel or both, or bedrock lying below the ground surface, that is all or partially saturated with water and permeable enough to allow water to be extracted as from a well.

(12) "Artesian pressure" means water pressure in an aquifer sufficient enough to cause the groundwater level in a well to rise above the level at which it was encountered in the well whether or not the water flows at the ground surface.

(13) "Artesian well" means a well in which the groundwater rises above the level at which it was encountered in the well whether or not the water flows at the ground surface.

(14) "AWWA" means American water works association.

(15) "AWS" means American welding society.

(16) "Bail−down method" means a method for setting a screen whereby the screen is fitted with an open pipe sleeve or a bail−down shoe at its lower end and sediment is removed from below the screen to allow the screen to settle into place.

(17) "Basement" means a subsurface structure or part of a structure in which the floor is entirely below grade.

(17m) "Batch chlorination" means the process of disinfecting a well by injecting, in one continuous pour, a chlorine solution that equals or exceeds the volume of standing water in the well and by using a process that recirculates the solution through the pump and pump discharge piping system back into the well.

(18) "Bedrock" means any naturally formed consolidated or coherent material of the earth's crust, composed of one or more minerals, rock fragments or organic material that underlies any soil or other unconsolidated surficial material or is exposed at the surface. Bedrock includes, but is not limited to limestone (dolomite), sandstone, shale and igneous and metamorphic crystalline rock, including granite, rhyolite, quartzite, gabbro, basalt, gneiss, schist, diorite and greenstone.

(19) "Cable−tool drilling machine" means a machine which uses a drill bit with a cutting edge at the bottom of a heavy string of tools suspended on a cable. The drillhole material is broken up by repeated lifting and dropping of the tools and bit.

(19m) "Chemical conditioning" means using department−approved chemicals or products to restore a well to its original capacity, production capability or water quality.

(20) "Cistern" means a tank in which rainwater is stored or collected.

(21) "Clay" means an inorganic soil with grain size less than 0.074mm and with characteristics of low permeability and a plasticity index (PI) of more than 7.

(22) "Clay slurry" means a fluid mixture of water, clean native clay and drill cuttings or sand having a mud weight of at least 11 pounds per gallon.

(23) "Clear water" means wastewater other than storm water, having no impurities or where impurities are below a minimum concentration considered harmful by the department of safety and professional services, including but not limited to noncontact cooling water and condensate drainage from refrigeration compressors and air−conditioning equipment, drainage of water used for equipment chilling purposes, and cooled condensate from steam heating systems or other equipment.

(24) "Community water system" means a public water system which serves at least 15 service connections used by year−round residents or regularly serves at least 25 year−round residents. Any water system serving 7 or more single family homes, 10 or more mobile homes, 10 or more apartment units, 10 or more duplex living units or 10 or more condominium units shall be considered a community water system unless information satisfactory to the department is provided by the owner indicating that 25 year−round residents will not be served.

(24m) "Comparable protection" means to substitute alternative protective measures to provide similar or equal sanitary protection to that provided by this chapter including the well location requirements of s. NR 812.08.

(25) "Conduit" means piping or tubing used to protect discharge or suction piping or electrical wires.

(26) "Confining bed" means a geological layer of either unconsolidated material, usually clay or hardpan, or bedrock, usually shale, that is all or partially saturated with water and having permeability low enough relative to the aquifer to give the water in the aquifer artesian head.

(27) "Contaminant" means any physical, chemical, biological or radiological substance or matter in water.

(27m) "Crawl space" means the space below a building having no basement; the space being at ground grade, in a depression or in an excavation.

(27t) "Cross connection" means a connection or potential connection between any part of a water supply system and another environment containing substances that, under any circumstances, would allow the substances to enter the water supply system by means of back siphonage or back pressure.

(28) "DHS" means the department of health services.

(29m) "DR" means dimension ratio and is used as a substitute for standard dimension ratio (SDR).

(30) "Department" means the department of natural resources.

(30f) "Detention basin" means an excavation into soils having low permeability or installed with a liner having low permeability, not having a permanent pool of water, designed and constructed to temporarily hold storm water to reduce peak

Removed by Register March 2015 No. 711. For current adm. code see: http://docs.legis.wisconsin.gov/code/admin_code.

discharges of storm water for flood control and to allow for the physical settling of pollutants.

(30m) "Detention pond" means an impoundment that has a permanent pool of water and is designed to have the capacity to temporarily store storm water runoff to provide flood control and to allow for the physical settling of pollutants.

(30t) "Ditch" means a long narrow excavation dug in the earth for the drainage of surface water.

(30x) "Downslope location" means a well or reservoir is located directly down−gradient from a contamination source or a potential contamination source, regardless of the presence or absence of a structure between the well and the source, when the ground surface elevation at the well or reservoir is lower than the elevation at the source, and surface water that runs over the source would travel within 8 feet of the well or reservoir.

(31) "Drawdown" means the extent to which the water level or water pressure in and near a well is lowered when water is pumped or flows from the well.

(32) "Drilled wells" means wells or drillholes constructed by digging, boring, drilling, jetting, driving or similar methods. Drilled wells do not include driven point (sand point) wells unless driving the point is combined with a process to remove material below the 10−foot depth.

(33) "Drillhole" means an excavation, opening or driven point well deeper than it is wide that extends more than 10 feet below the ground surface.

(a) "Heat exchange drillhole" means an excavation or opening in the ground that is deeper than it is wide, that extends more than 25 feet below the ground surface, and that is made for the purpose of installing a geothermal closed−loop heat exchange system.

(b) "Lower drillhole" means that part of a drillhole below the vertical zone of contamination or below the well casing pipe.

(c) "Upper enlarged drillhole" means a drillhole larger in diameter than the well casing pipe.

(34) "Drilling mud" means a fluid mixture of water, sodium bentonite, drill cuttings and any approved additives.

(35) "Driven point well" means a well constructed by joining a drive point with lengths of pipe, and driving the assembly into the ground with percussion equipment or by hand, but without first removing material below the 10−foot depth.

Note: A "driven point well" is also known as a sand point well.

Note: All other types of wells, including those constructed by a combination of jetting and driving, are drilled wells.

(35e) "Dual−rotary drilling method" means a drilling system that uses a drilling machine with two separately−operated rotary−drive mechanisms, a top drive that rotates the drill string and bit, and a lower drive unit that clamps onto the casing pipe, rotates it and advances it into the geologic formation.

(35g) "DSPS" means the department of safety and professional services.

(35m) "Dug well" means a well consisting of a large diameter hole, deeper than it is wide, constructed into the ground, usually by hand, but if by mechanical means, by methods other than drilling, jetting or boring; and within which the side walls are supported by a curbing.

(37) "Established ground surface" means the permanent elevation of the surface of the site of a well.

(38) "Existing installations" means wells and water systems which were constructed, reconstructed or installed before October 1, 2014.

(40) "FDA" means U.S. food and drug administration.

(41) "Feature" means any well construction or pump installation item for which there is a specification in this chapter.

(41m) "Filling and sealing" means to fill a well, drillhole, pit or reservoir with a material or materials so the well, drillhole, pit or reservoir will not act as a vertical conduit to contaminate another well, groundwater or an aquifer.

Note: The term "filling and sealing" replaces the term "abandonment," previously used in this chapter.

(42) "Filter strip" means an area of vegetation designed and constructed in accordance with Soil Conservation Service Standard 393 adjacent to an animal yard or animal shelter or adjacent to a manure storage facility, used to remove sediment and organic matter from the runoff from the facility.

Note: The term "Vegetated treatment area" in now used instead of the term "filter strip."

(43) "Floodfringe" means that portion of the floodplain outside of the floodway which is covered by flood water during the regional flood. The term floodfringe is generally associated with standing water rather than flowing water.

(44) "Floodplain" means that land which has been or may be covered by flood water during the regional flood. The floodplain includes the floodway, floodfringe, shallow depth flooding, flood storage and coastal floodplain areas.

(45) "Floodway" means the channel of a river or stream and those portions of the floodplain adjoining the channel required to carry the regional flood discharge.

(46) "Flowing well" means a well from which groundwater flows above the ground surface without pumping.

(47) "Flushing" means causing a rapid intermittent flow of water from a well by pumping, bailing or similar operation.

(47m) "Foundation drain" means a subsoil drain that serves the area of the foundation of a building.

(48) "Grease interceptor or trap" means a receptacle designed to intercept and retain grease or fatty substances.

(49) "Groundwater' means any of the waters of the state, as defined in s. 281.01 (18), Stats., occurring in a saturated subsurface geological formation of rock or soil.

(50) "Hazardous waste treatment facility" has the meaning designated in s. 291.01 (22), Stats.

(50e) "Heat exchange drilling" means the industry and procedure employed in making heat exchange drillholes.

(50m) "Heating−airconditioning air shaft" means a vertical, lined excavation extending deeper than 10 feet below the ground surface used for the intake or exhaust of air to or from a heating or air conditioning.

(51) "High capacity property" means one property on which a high capacity well system exists or is to be constructed.

(52) "High capacity well" means a well constructed on a high capacity property.

(53) "High capacity well system" means one or more wells, drillholes, or mine shafts used or to be used to withdraw water for any purpose on one property, if the total pumping or flowing capacity of all wells, drillholes, or mine shafts on one property is 70 or more gallons per minute based on the pump curve at the lowest system pressure setting, or based on the highest flow rate from a flowing well or wells.

(54) "Holding tank" means a watertight receptacle used for the collection and holding of wastewater.

(54g) "Hung liner" means a well casing pipe which is placed into an existing larger diameter well casing pipe or into an existing drillhole, installed in a manner not extending all the way to the bottom of the well.

(54r) "Hung well casing pipe" means a casing pipe that is smaller in diameter than the enlarged drillhole into which it is placed and installed in a manner so it does not extend all the way to the bottom of the enlarged drillhole.

(55) "Hydrofracturing" means hydraulic fracturing of an aquifer by injecting a fluid into the well under pressures great enough to open the bedrock along bedding planes, joints and fractures and may include injecting sand or a similar approved material to hold the crevices open when the pressure is removed.

(55c) "Infiltration basin" means an excavation into permeable soils designed and constructed to temporarily store surface

Removed by Register March 2015 No. 711. For current adm. code see: http://docs.legis.wisconsin.gov/code/admin_code.

water runoff and allow it to infiltrate so as to provide flood control, groundwater recharge and to allow for the settling of pollutants.

(55e) "Influent sewer" means a sanitary collector sewer beyond the last manhole prior to a wastewater treatment plant.

(55m) "Junkyard" means a business or a property which is used for storing, processing, buying or selling scrap, automobile bodies or parts if the facility will continually have like materials on the premises. This term does not include litter or debris scattered along or upon a roadway, temporary outdoor storage of junk for limited duration, or smaller accumulations of junk on residential lots for personal use.

(56) "Landfill" means a solid waste disposal site or facility, not classified as a landspreading facility or a surface impoundment facility, where solid waste is disposed on land. This term includes existing, proposed and abandoned landfills, open dumps, one−time disposal sites as defined in ch. NR 502, small demolition landfills as defined in ch. NR 502, mining waste disposal sites as defined in ch. NR 182 and hazardous waste disposal facilities as defined in chs. NR 660 to 670.

(57) "Landing collar" means a metal ring welded near the bottom of the inside of a string of well casing pipe to prevent a drillable grouting plug from dropping out the bottom of the well casing pipe during cement grouting.

(57m) "Licensed pump installer" means any individual who has obtained a license under s. 280.15 (2m), Stats., and s. NR 146.04, as a pump installer and has paid the annual license fee under s. 280.15 (2m) (c) 2., Stats.

(57s) "Licensed water well driller" means any individual who has obtained a license under s. 280.15 (2m), Stats., and s. NR 146.04, as a water well driller and has paid the annual license fee under s. 280.15 (2m) (c) 1., Stats.

(57t) "Lift station" means a wastewater collection and pumping structure that collects wastewater from collector sewers and pumps it through force main sewers.

(57w) "Limits of filling", for a landfill, means the outermost limit at which waste at a landfill facility has been disposed of, or approved, or proposed for disposal.

(58) "Liner pipe" means:

(a) Protective well casing pipe installed subsequent to initial construction to seal off a zone of contamination; or

(b) Well casing pipe installed during or subsequent to the initial well construction to seal off a caving or sloughing formation or to eliminate turbidity.

(59) "Liquid waste" means process wastewater from food processing, product manufacturing and contaminated water removed from underground or open pit workings of a mine. This definition does not include clear water waste.

(60) "Liquid waste disposal system" means a facility for disposing of liquid wastes consisting of a ridge and furrow system, a landspreading system including sludge drying beds at a wastewater treatment plant, a wastewater spray irrigation system, or an absorption, seepage, retention, storage or treatment pond, lagoon, or a wastewater slow sand filter or filters.

(61) "Manure hopper or reception tank" means a liquid−tight concrete, steel or otherwise fabricated vessel primarily for the purpose of facilitating conveyance of liquid or solid manure from one point to another in an animal waste handling system.

(61g) "Manure loading area" means an area where manure is transferred from an animal shelter unloader or a barn unloader onto a pad or into a receptacle.

(61m) "Manure stack" means solid manure stacked for more than 120 days on the ground surface or on a paved surface.

(61q) "Manure storage structure, earthen" means an impoundment made by excavation or mounding of soil for treatment or temporary storage of liquid or solid animal wastes. This term includes structures lined with clay, bentonite or synthetic film materials and structures consisting of slats or drainage openings ("picket dams") used to store solid or semi−solid animal waste material from which runoff occurs. This term also includes fabricated manure storage structures that are not watertight situated above, at or below ground grade.

(61u) "Manure storage structure, fabricated" means a concrete, steel or otherwise fabricated structure used for treatment or temporary storage of liquid or solid animal waste.

(62) "Monitoring well" means a well or drillhole constructed for the purpose of obtaining information on the physical, chemical, radiological or biological characteristics of the groundwater.

(63) "Near surface water" means water in the zone immediately below the ground surface. It includes, but is not limited to seepage from barnyards, leaching pools and disposal beds or leakage from sewers, drains and similar sources of contaminated water.

(64) "Non−community water system" means a public water system that is not a community water system. A non−community water system may be either a non−transient non−community water system or a transient non−community water system.

(65) "Nominal diameter" means the inside pipe diameter for pipe sizes 1−inch diameter through 12−inch diameter and means the outside pipe diameter for pipe sizes greater than 12−inch diameter.

(66) "Nonpotable" means water supplied for purposes other than human consumption, sanitary use or the preparation of food or pharmaceutical products.

(67) "NSF" or "NSF International" means the organization formerly known as the National Sanitation Foundation.

Note: The NSF or NSF International address is PO Box 130149, 789 N. Dixboro Road, Ann Arbor, Michigan 48113−0140.

(68) "One property" means all contiguous land controlled by one owner, lessee, or any other person having a possessory interest. Lands under single ownership bisected by highways or railroad right−of−ways are considered contiguous.

(69) "Outcrop" means bedrock exposed at the ground surface, including roadcuts.

(70) "Percussion drilling method" means a drilling method using a cable−tool drilling machine or a drilling method whereby the permanent well casing pipe is driven, or is set into an upper enlarged drillhole and then driven; soil or rock material inside is broken up or crushed with a drill bit; and the drill cuttings are removed from inside or just below the casing pipe. This method may be performed with a cable−tool drilling machine, a rotary machine with a hammer or with a casing hammer.

(71) "Permit" means a well location or pump installation permit issued by a county authorized to administer ch. NR 812 under ch. NR 845.

(72) "Person" means an individual, firm, business, corporation, limited liability corporation, company, association, cooperative, trust institution, partnership, state, public utility, municipality, or federal, state, or interstate agency.

(72m) "Pet waste disposal unit" means a dry well, seepage bed, seepage pit, seepage trench, seepage mound or an absorption field used for the disposal of pet waste material.

(73) "Pit" means any structure that is completely or partially below the ground surface or below a building floor used for the housing of wells, offset pumps, pressure tanks or valves. Subsurface well or pumprooms, alcoves, adjoining a basement foundation structure are pits.

(74) "Pitless adapter or unit" means a mechanical device attached to the well casing pipe, usually below the frost level, for underground conveyance of water from the well.

(a) "Weld−on pitless adapter" means a pitless adapter attached to a cut opening in the well casing pipe by a weld applied at the well site.

Removed by Register March 2015 No. 711. For current adm. code see: http://docs.legis.wisconsin.gov/code/admin_code.

(b) "Pitless unit" means a pitless adapter device assembled and pressure tested for leakage at a factory and designed to be attached, in the field, to the top of the cut−off portion of the well casing pipe.

(c) "Clamp−on or bolt−on pitless adapter" is a pump installation discharge equipment device having a saddle designed to be attached to cover the outside of an opening that has been cut through the well casing pipe, to allow the saddle to be connected with nuts to the ends of a threaded U−bolt or U−strap that will surround the well casing pipe.

(d) "Bolt−through pitless adapter" is a pitless device that includes two gasketed metal segments that are to be attached with a threaded coupling and designed to extend through and plug a hole that has been cut through the polyvinyl chloride or ABS thermoplastic well casing pipe.

(e) "Pitless receiver tank" means a pitless unit having a permanently attached steel pressure tank surrounding the casing pipe as an integral part of the unit and installed, as a unit, at a factory.

(75) "Potable" means water supplied for human consumption, sanitary use or for the preparation of food or pharmaceutical products.

(75c) "Potable water" means water supplied for human consumption, or water supplied for sanitary use or for the washing or preparation of food or pharmaceutical products.

Note: The term "water for human consumption" is used interchangeably with the term "potable water."

(75g) "POWTS" means a private onsite wastewater treatment system.

Note: A "POWTS" may include, but is not limited to, a substitute for a septic tank or soil absorption field or a substitute for a holding tank.

(75L) "POWTS component" means any subsystem, subassembly or other system designed for use in or as part of a private onsite wastewater treatment system which may include treatment, dispersal, or holding and includes any related piping.

(75p) "POWTS dispersal unit" means a device or method intended to promote the assimilation of treated wastewater by the environment.

Note: The terms "absorption field" and "sewage disposal unit" have been used in previous versions of this rule to describe these types of units.

(75t) "POWTS holding component" means any receptacle intended to collect wastewater for a period of time, including holding tanks and dosing tanks.

(75x) "POWTS treatment component" means a device or method that is intended to reduce the contaminant load of wastewater.

(76) "Preparation of food products" means washing, cooling, cooking, pasteurizing, bottling, canning or otherwise preparing food for human consumption and includes the washing of utensils and equipment used in the production or preparation of food.

(77) "Pressure or box elbow" means a special concentric pipe fitting used to raise the horizontal pressurized concentric piping arrangement between a well and an offset pump vertically to the specified elevation above the floor.

(78) "Private water system" means any water system supplying water that is not a public water system.

(79) "Privy" means a building or structure located above a buried container or above an unlined excavation used for the deposition of human waste.

(79e) "Pressure system" means that portion of a pump installation that is upstream of a building control valve or upstream of a pressure tank, including the pressure tank.

(79m) "Proposed landfill" means a solid waste disposal facility for which actual notice of the intention to develop the facility has been given to the owners of property located within 1,200 feet of the proposed facility or for which a request has been made under s. 289.22 (1m), Stats., provided that a feasibility report under s. 289.23, Stats., is submitted to the department within 2 years after the applicable notice or request. Proposed landfill does not include a facility the department has determined to be not feasible under s. 289.23, Stats., or a facility for which the department has determined that an approval for the facility is not being pursued with reasonable diligence.

(79p) "Property transfer well inspection" means an inspection, for compensation, for the purpose of locating or evaluating wells that need to be filled and sealed and water supply wells or pressure systems on real property in contemplation of a transfer of the real property.

(79t) "Property transfer well inspector" means an individual licensed as a water well driller or pump installer who performs a property transfer well inspection, completes the form required in s. NR 812.44 (3) and collects the water samples required in s. NR 812.44 (4).

(80) "Public water system" means a system for the provision to the public of piped water for human consumption through pipes or other constructed conveyances if the system has at least 15 service connections or regularly serves an average of at least 25 individuals daily at least 60 days out of the year. A public water system is either a "community water system" or a "non−community water system." A system:

(a) Includes any collection, treatment, storage, and distribution facilities under control of the operator of the system and used primarily in connection with the system, and

(b) Includes any collection or pretreatment storage facilities not under the system's control which are used primarily in connection with the system.

(80m) "Pump installation" means the pump and its associated pressure system including any equipment and material needed to withdraw, obtain, discharge and store water from a well or a spring. The pump installation includes the spring box, reservoir, pump, pump drop pipe, check valves, well cap or seal, pitless adapter, pitless receiver tank, pitless unit, above−ground discharge unit, associated discharge piping and associated connections, valves and appurtenances, pressure tank, sampling faucet, water storage or pressure vessel or structure, the electrical wiring and controls needed to operate the pump or pressure system, and any chemical addition, water treatment device or yard hydrant upstream of the water storage or pressure vessel or building control valve.

(81) "Pump installer" has the meaning designated in s. 280.01 (4), Stats.

Note: Section 280.01 (4), Stats., was renumbered to s. 280.01 (2e) by 2005 Wis. Act 360, and amended to change "pump installer" to "licensed pump installer."

Note: The statutory definition of "pump installer" is any person, firm or corporation who has registered as such with the department and shall have paid the annual registration fee and obtained a permit to engage in pump installing.

(82) "Pump installing" has the meaning specified in s. 280.01 (5), Stats., and includes installing, repairing, replacing or reinstalling a: spring box, reservoir, pump, pump drop pipe, check valve, well cap or seal, pitless adapter, pitless receiver tank, pitless unit, above−ground discharge unit, associated discharge piping and associated connections, valves and appurtenances, pressure tank, sampling faucet, water storage or pressure vessel or structure, the electrical wiring and controls needed to operate a pump or pressure system, and any chemical addition, water treatment device or yard hydrant upstream of the water storage or pressure vessel or building control valve; attaching well casing pipe to extend the well casing pipe to a complying height above grade, or up and out of a pit or a subsurface pumproom or alcove; or bailing or chemically conditioning a well to return it to its original capacity, production capability or water quality. Pump installing does not include installation of a temporary test pump by a well driller for the purpose of determining well capacity or water quality and does not include the installation, by a well driller, of a well cap or seal. Opening a well cap or well seal to inspect or chlorinate a well is also not considered pump installing unless the well cap or seal is replaced with a different cap or seal, or unless the well has a hand pump installed on it.

Removed by Register March 2015 No. 711. For current adm. code see: http://docs.legis.wisconsin.gov/code/admin_code.

Note: Section 280.01 (5), Stats., defines "Pump installing" to mean the industry and procedure employed in the placement and preparation for operation of equipment and materials utilized in withdrawing or obtaining water from a well for consumption or use, including all construction involved in making entrance to the well and establishing such seals and safeguards as are necessary to protect such water from contamination.

(83) "Pumping water level" means the elevation of the surface of the water in a well after a period of pumping at a given rate.

(84) "Quarry" means an open or surface working in bedrock for the extraction of nonmetallic materials, usually construction stone, including those no longer in operation.

(85) "Reconstruction" means modifying the original construction of a well. Reconstruction includes, but is not limited to deepening, lining, installing or replacing a screen, underreaming, hydrofracturing and blasting.

(85m) "Recycling facility" means a facility where waste materials are recycled including a facility where waste has been generated.

(86) "Regional flood" means a flood determined to be representative of large floods known to have occurred in Wisconsin or which may be expected to occur on a particular lake, river, or stream once in every 100 years.

(87) "Reservoir" means a facility for storage of water constructed entirely above or partially below the ground surface.

(88) "Rotary drilling method" means a drilling method whereby an upper enlarged drillhole is constructed using a circular rotating action applied to a string of hollow drilling rods having a drill bit attached to the bottom.

(89) "Salvage yard" means a site or facility at which salvageable materials are stored or at which wrecking, dismantling or demolition of salvageable materials are conducted. Salvage yards also include those yards with 25 or more inoperable vehicles.

(90) "Sanitary building drain" means horizontal piping within or under a building, which conveys wastewater consisting in part of domestic wastewater, and which is installed below the lowest fixture or the lowest floor level from which fixtures can drain by gravity to the building sewer.

(91) "Sanitary building sewer" means that part of the drain system not within or under a building which conveys its discharge of wastewater consisting in part of domestic wastewater to a public sewer, private interceptor main sewer, private onsite wastewater treatment system or other point of discharge or dispersal.

(92) "Sanitary collector sewer" means a sanitary sewer serving 2 or more sanitary building sewers.

(93) "Sanitary condition" means, when referring to a well, reservoir, or spring:

(a) That the construction of the well, reservoir or spring and the installation of the pumping equipment are such that the well, reservoir or spring is effectively protected against entrance of surface contamination, and

(b) That the location and the surrounding area are free from debris or filth of any character and not subject to flooding.

(94) "School" means a public or private educational facility in which a program of educational instruction is provided to children in any grade or grades from five−year old kindergarten through the 12th grade. Water systems serving athletic fields, school forests, environmental centers, home−based schools, day−care centers and Sunday schools are not school water systems.

(94g) "Scrap metal processing facility" means a facility at which machinery or equipment, or both, are used for the processing and manufacturing of iron, steel or nonferrous metallic scrap into prepared grades and whose principal product is scrap iron, scrap steel or nonferrous scrap for sale for resmelting purposes.

(94r) "Septage" means the wastewater or contents of septic or holding tanks, dosing chambers, grease interceptors, seepage beds, seepage pits, seepage trenches, privies or portable restrooms.

(95) "Septic tank" means a tank which receives and partially treats sewage through processes of sedimentation, oxygenation, flotation and bacterial action so as to separate solids from liquids in the sewage and discharges the liquid to a soil absorption unit.

(96) "Sinkhole" means a depression or opening on the land surface, usually funnel−shaped, generally formed by solution or collapse of limestone, dolomite or to a lesser extent sandstone bedrock occurring at or near the surface. Sinkholes may be partially or completely filled with unconsolidated material and solution enlargement of vertical passages often extend to the water table. Collapse of mine workings in other consolidated formations are also considered sinkholes.

(96g) "Sludge" means the accumulated solids generated during the biological, physical or chemical treatment of potable water or wastewater.

(96m) "Sodium bentonite" means a clay formed from the decomposition and recrystallization of volcanic ash and is largely composed of the clay mineral montmorillonite ($Na_{.33}$ $(Al_{1.67}Mg_{.33})$ Si_4O_{10} $(OH)_2$), commonly referred to as "western" or "Wyoming" bentonite, and has extensive ability to absorb water and swell to many times its original volume.

(97) "Soil absorption unit" means an absorption field, dry well, seepage bed, seepage pit, seepage mound or seepage trench designed for the disposal of wastewater effluent or clear water wastes by soil absorption. Soil absorption unit includes units both regulated and not regulated by ch. SPS 383 and units abandoned within 3 years.

(97m) "Solid waste processing facility" means a solid waste facility at which solid waste is baled, shredded, pulverized, composted, classified, separated, combusted or otherwise treated or altered by some means to facilitate further transfer, processing, utilization or disposal. Solid waste processing facility does not include an operation conducted by scrap metal, paper, fiber or plastic processors which are excluded form the definition of "solid waste facilities" in ch. NR 500.

(98) "Solid waste transfer facility" means a solid waste site for baling or transferring solid waste from one vehicle or container to another.

(99) "Special well casing pipe depth area" means an area established by the department requiring greater depth of well casing pipe and stringent well construction methods because of contamination. A list is available from the department.

(100) "Specific capacity" means the continuous yield of water from a well at a given discharge expressed in gallons per minute per foot of drawdown.

(101) "Spring" means a place where groundwater flows naturally from rock or soil onto the land surface or into a body of water.

(102) "Standard dimension ratio" means the ratio of average outside pipe diameter to minimum pipe wall thickness.

(103) "Static water level" means the level of the surface of the water in a well or water pressure at the top of a well, when no water flows or is being pumped. For flowing wells with a positive water pressure at the top of the well, the static water elevation is determined either by a stilling pipe or pressure gauge. Water levels are referenced to the elevation of the top of the well or the established ground surface at the well.

(104) "Storm building drain" means horizontal piping within or under a building which conveys storm water, clear water or both, and which is installed below the lowest fixture or the lowest floor level, from which fixtures or sources can drain by gravity to the building sewer.

(105) "Storm building sewer" means that part of the drain system not within or under a building which conveys its discharge of storm water, clear water, or both, to a public sewer, private interceptor main sewer, private onsite wastewater system or other point of discharge or dispersal.

Removed by Register March 2015 No. 711. For current adm. code see: http://docs.legis.wisconsin.gov/code/admin_code.

(106) "Storm collector sewer" means a storm sewer that collects storm water, storm waste, clear water wastes or other similar water from 2 or more storm sewer inlets or catch basins.

(107) "Subsoil drain" means that part of a drain system that conveys groundwater to a point of discharge or dispersal.

(108) "Sump" means a tank or pit that receives wastewater that must be emptied by mechanical means.

(108r) "Surface water" means all water which is open to the atmosphere and subject to surface runoff.

(109) "Surge tank" means a tank into which overflow from a flowing well, spring or other water source is discharged and is repumped to a pressure tank or the water system.

(110) "Telescoping method" means a method for setting a well screen where the well casing pipe is driven to the proposed screen setting depth and the well casing pipe is then pulled back to expose the screen. A packer is used to seal the annulus between the top of the screen and the bottom of the well casing pipe.

(110m) "Temporary manure stack" means solid manure only, piled for no more than 120 days within any one year period.

(110s) "Temporary outer casing" means a string of casing pipe that is driven, turned or placed from the ground surface into the surficial geological formation or formations as part of the process of constructing an upper enlarged drillhole and which is not intended to be left in place as a permanent well casing pipe.

(111) "Top of bedrock" means the top of firm rock. The determination of the top of bedrock shall be based on the change in the action of the drilling machine and on the change in the type and size of the drill cuttings. The presence of bedrock shall be indicated when a majority of the drill cuttings consist of either angular rock fragments, as in the case of crystalline bedrock, or rock fragments composed of individual grains or rock particles that are cemented together to form an aggregate, as opposed to single sediment particles, such as in sand.

(111m) "Treatment pond" means a structure that is used for the treatment or storage of liquid waste. Treatment pond includes absorption, retention, storage and treatment ponds or lagoons.

(112) "UL" means underwriters laboratories, inc.

(112m) "Upstream" means, with respect to the pump installation discharge and pressure system, in a direction back towards the well.

Note: In previous versions of this rule the term "prior to" was used in lieu of the term "upstream."

(112q) "Variance" means a department approval to construct or install a water system or a portion of a water system in a manner not in strict compliance with the requirements of this chapter, but providing comparable sanitary protection in accordance with conditions specified by the department in its approval.

(112v) "Vegetated treatment area" means a component of an agricultural waste management system that is an area or strip of herbaceous vegetation designed and constructed to Natural Resources Conservation Service (NRCS) Standard 635 specifications, located adjacent to an animal barn, animal barn pen, animal shelter, animal yard or a manure storage facility and which is intended to improve water quality by reducing pollutants associated with animal manure and other agricultural wastewater runoff.

Note: In previous versions of this rule the term "Filter strip" was used instead of the term "Vegetated treatment area."

(113) "Vertical zone of contamination" means that depth of geologic formations, generally near the ground surface, containing connecting pore spaces, crevices or similar openings, including artificial channels, such as unprotected wells or drillholes, through which contaminated water or contaminants gain access to a well or to the groundwater.

(114) "Walkout basement" means a basement, with the floor at ground grade level on at least one side of the structure, from which it is possible to walk directly outside without walking upstairs or uphill.

(115) "Wastewater" means any water carrying wastes created in and conducted away from residences, industrial establishments and public buildings with ground or surface water which may be present including any liquid wastes except clear water wastes.

(116) "Wastewater treatment plant" has the meaning designated in ch. NR 114.

(117) "Water supply" means the sources, wells, pumps and intake and storage structures from which water is supplied for any purpose.

(118) "Water system" means the water supply, storage, treatment facilities and all structures and piping by which water is provided for any purpose.

(119) "Well" means any drillhole or other excavation or opening deeper than it is wide that extends more than 10 feet below the ground surface constructed for the purpose of obtaining groundwater.

(119g) "Well and pressure system" means the water supply and pump installation upstream of a building control valve or pressure tank and including any pressure tank.

(120) "Well cap or seal" means an approved apparatus or device used to cover the top of a well casing pipe.

(121) "Well casing pipe" means pipe meeting standards specified in s. NR 812.17 which is driven or set to seal off the vertical zone of contamination.

(122) "Well constructor" means any person that constructs a well which is not required to be constructed by a licensed individual water well driller or a registered water well drilling business.

(123) "Well driller" has the meaning as designated in ch. 280, Stats.

(124) "Well drilling" has the meaning specified in s. 280.01 (8), Stats., and includes any activity which requires the use of a well drilling rig or similar equipment, or any activity which is conducted using a well drilling rig or similar equipment with the exception of the driving of points having pipe or casing smaller than three inches in diameter. Well drilling also includes constructing a well or performing any activity which changes the characteristics of a drilled well including constructing, reconstructing or deepening a well, sealing the annular space of a well, joining or welding together lengths of well casing pipe or liner pipe, installation of a liner, installing or replacing a screen, well rehabilitation, hydrofracturing, blasting, and chemical conditioning.

Note: Section 280.01(8), Stats., defines "Well drilling" to mean the industry and procedure employed in obtaining groundwater from a well by digging, boring, drilling, driving or other methods but not including the driving of points for the purpose of obtaining ground water. It shall also include all construction work and installation of well casings in said well involved therein for the protection of such well water against pollution.

Note: Attaching well casing pipe to the upper portion of a well to extend the well out of a pit is not considered well drilling.

(124m) "Well Notification" means a notice provided by a prospective well owner or well driller to the department in accordance with s. 281.34, Stats., before any new private well is constructed.

Note: The Well Notification does not apply to proposed high capacity wells, school wells or wastewater treatment plant wells.

(125) "Well−point driving" means constructing a well by joining a drive point screen with lengths of pipe and driving the assembly into the ground with percussion equipment or by hand, but without removing material from a drillhole more than 10 feet below the ground surface.

(126) "Well vent" means a screened opening in a well seal to allow atmospheric pressure to be maintained in the well.

(127) "Well yield" means the quantity of water which may flow or be pumped from the well per unit of time.

(128) "Zone of saturation" means that part of the earth's crust beneath the shallowest water table in which all voids are filled with water under pressure greater than atmospheric.

History: Cr. Register, January, 1991, No. 421, eff. 2−1−91; am. (3), (4), (48), (61m), (74) (b), (79), (81), (82), (107) and (119), cr. (27m) (30f), (30m), (30t), (30x),

Removed by Register March 2015 No. 711. For current adm. code see: http://docs.legis.wisconsin.gov/code/admin_code.

(72m), (79m), (97m) and (110m), renum. (36) and (39) to be (61q) and (61u) and am. Register, September, 1994, No. 465, eff. 10−1−94; corrections made under s. 13.93 (2m) (b) 7., Stats., Register, September, 1994, No. 465; correction in (29), (30) and (79m) made under s. 13.93 (2m) (b) 6. and 7., Stats., Register, September, 1996, No. 489; corrections in (50), (81), (97), (123) and (124) made under s. 13.93 (2m) (b) 7., Stats., Register, December, 1998, No. 516; correction in (71) made under s. 13.93 (2m) (b) 7., Stats., Register July 2002 No. 559; CR 05−020: cr. (24m) and (57w) Register January 2006 No. 601, eff. 2−1−06; corrections in (28) and (56) made under s. 13.92 (4) (b) 6. and 7., Stats., Register July 2010 No. 655; correction in (29), (97) made under s. 13.92 (4) (b) 6., 7., Stats., and (29) renumbered to (35g) under s. 13.92 (4) (b) 1., Stats., Register December 2011 No. 672; **CR 13−096: am. (33) (a), cr. (50e), CR 13−099: cr. (1d), (1h), (1p), (1t), am. (3), (4), (6), (10), cr. (10m), (17m), (19m), am. (23), (24), cr. (27t), (29m), am. (35), cr. (35e), am. (38), cr. (41m), (47m), am. (49), renum. (51) to (50), (52) to (51), am. (53), (54), cr. (54g), (54r), (55m), am. (57m), cr. (57s), am. (60), cr. (61g), am. (64), (67), (72), (74) (b), cr. (74) (c) to (e), (75c), (75g), (75L), (75p), (75t), (75x), (79e), (79p), (79t), am. (80), cr. (80m), r. and recr. (82), am. (84), cr. (85m), am. (86), (90), (91), (93) (intro.), (a), (94), cr. (94g), (94r), (96g), am. (104) to (108), cr. (108r), (110s), renum. (112g) to (111m), cr. (112m), (112v), (119g), am. (122), r. and recr. (124), cr. (124m) Register September 2014 No. 705, eff. 10−1−14; correction in (67) made under s. 35.17, Stats., Register September 2014 No. 705.**

NR 812.08 Water well, heat exchange drillhole, reservoir and spring location. (1) GENERAL. Any potable or nonpotable well, reservoir, or spring shall be located:

(a) So the well and its surroundings can be kept in a sanitary condition.

(b) At the highest point on the property consistent with the general layout and surroundings if reasonably possible, but in any case protected against surface water flow and flooding.

(c) As far away from any known or possible source of contamination as the general layout of the premises and the surroundings allow.

Note: Section PSC 114.234C8 requires that a horizontal clearance of at least 3/4 of the vertical clearance of the conductors, including overhead power lines to the ground required by Rule 232 shall be maintained between open conductors and wells. Persons installing wells must comply with this requirement.

(d) Such that any potential contaminant source, not identified in this section or in Table A, is a minimum of 8 feet from the well, reservoir, or spring.

(e) Every well shall be located so that it is reasonably accessible with proper equipment for cleaning, treatment, repair, testing, inspection and any other maintenance that may be necessary.

(f) In a manner to meet the additional location and construction specifications of s. NR 812.12 (3), (15), (16), and (17).

(2) RELATION TO BUILDINGS. In relation to buildings, the location of any potable or nonpotable well shall be as follows:

(a) When a well is located outside it shall be located so that the top of the well casing pipe extends at least 12 inches above the final established ground grade and in a manner such that it is not directly in line with a rainwater downspout outlet or other similar clear water discharge that creates a sanitary hazard to the well.

Note: The department recommends that when a well is located adjacent to a building, it be located so the center line of the well extended vertically will clear the overhang of any building by not less than 2 feet to allow for well reconstruction and for pulling the pump.

(b) When a structure is built over a drilled well, it shall have an easily removable access hatch, or provide other practicable access to allow for pulling and servicing the pump. The well casing pipe shall extend at least 12 inches above ground grade or above the ground−grade floor of the building and shall be sealed watertight at the point where it extends through the floor.

(c) No well may be located, nor a building constructed, such that the well casing pipe will terminate in a basement or extend through the basement of any building or terminate under the floor of a building having no basement. A well may not terminate in or extend through a crawl space having a below ground grade depression or excavation.

Note: Wells terminating in basements and below−grade crawl spaces often pose a sanitary hazard to safe drinking water so they have not been allowed to be constructed, nor have screens been allowed to be replaced since April 10, 1953. Many wells terminating in basements or crawl spaces do not meet the requirements of Subchapter IV.

Note: This paragraph does not apply to wells located in alcoves or subsurface pumprooms adjoining a basement.

(d) The top of a well casing pipe may terminate in a walkout basement if the following conditions are met:

1. It is possible to walk directly outside from the walkout basement without walking upstairs or upslope.

2. The surface of the ground around the outside exit door of the walkout basement slopes down away from the door.

3. The well and pump installation are accessible for repair and removal.

4. The well produces water continuously free from contaminants in excess of the drinking water standards of s. NR 812.06.

5. The well casing pipe depth meets the requirements of s. NR 812.42 (1) (b).

6. The well and pump installation are in compliance with all other requirements of this chapter.

7. The walkout basement is not subject to flooding

8. The walkout basement is not in a floodway or floodplain.

(e) A well may not terminate in or extend through a crawl space having a below grade depression or excavation.

(f) If a well must be located in a driveway, parking area, walkway or other high traffic area due to lot size or to meet minimum required separation distances between the well and contaminant sources, the well may be contained within a driveway ramp structure without department approval providing the driveway ramp meets the specifications of s. NR 812.36. Driveway ramps may not be constructed or located in a floodway or floodplain.

(g) A yard hydrant may not be installed within or on a well.

(3) RELATION TO FLOODPLAINS. (a) A potable or nonpotable well may be constructed, reconstructed or replaced in a floodfringe provided that the top of the well is terminated at least 2 feet above the regional flood elevation for the well site.

(b) A well may be reconstructed or replaced in a floodway provided that the top of the well is terminated at least 2 feet above the regional flood elevation for the well site.

(c) A well may not be constructed on a floodway property that is either undeveloped or has building structures but no existing well.

(d) The regional flood elevation may be obtained from the department.

(4) RELATION TO CONTAMINATION SOURCES. Minimum separating distances between any new potable or nonpotable well, heat exchange drillhole, reservoir or spring and existing sources of contamination; or between new sources of contamination and potable or nonpotable wells, heat exchange drillholes, reservoirs or springs shall be maintained as described in this subsection. The minimum separating distances of this subsection do not apply to dewatering wells approved under s. NR 812.09 (4) (a). Greater separation distances may be required for wells requiring plan approval under s. NR 812.09. Separation distance requirements to possible sources of contamination will not be waived because of property lines. Separation distances shall be measured from the edge of the well, reservoir or spring, to the nearest edge of the contamination source. Minimum separating distances are listed in Table A and are as follows:

(a) Eight feet between a well or reservoir and a:

1. Buried gravity flow sanitary building drain having pipe conforming to ch. SPS 384;

2. Buried gravity flow sanitary building sewer having pipe conforming to ch. SPS 384;

7. Cistern;

9. Noncomplying pit, subsurface pumproom, alcove, or reservoir;

10. Nonpotable well;

11. Fertilizer or pesticide storage tank with a capacity of less than 1,500 gallons, but only if the well is nonpotable and if the tank is not buried;

Removed by Register March 2015 No. 711. For current adm. code see: http://docs.legis.wisconsin.gov/code/admin_code.

Note: For potable wells and buried tanks, see par. (d) 1.

12. Plastic silage storage and transfer tube;

14. Swimming pool, measured to the nearest edge of the water;

15. Dog or other small pet house, pet animal shelter or kennel housing not more than 5 adult pets on a residential lot;

16. A ditch, but not including a river or stream;

Note: For the minimum separating distance to a river or a stream, see par. (b) 7.

17. Buried liquid propane (L.P.) gas tank as specified in ch. SPS 340; or

18. Buried storm collector sewer or stormwater culvert.

(b) Twenty−five feet between a well or reservoir and a:

1. Buried grease interceptor or trap;

2. A septic tank, a POWTS treatment component, or a wastewater sump;

Note: A POWTS treatment component includes a private wastewater treatment tank.

3. A holding tank or POWTS holding component;

4. Buried sanitary building drain or sanitary building sewer having pipe not conforming to ch. SPS 384;

5. Buried pressurized sanitary building sewer having pipe conforming to ch. SPS 384;

6. Buried gravity manure sewer;

7. Lake, pond, river, stream, or stormwater detention basin, measured to the regional high water elevation in the case of a lake or pond, to the edge of the floodway in the case of a river or stream, or to the edge in the case of a stormwater detention basin;

Note: The separation distance requirements of this subsection do not apply to synthetically−lined decorative yard ponds located on residential lots.

11. Buried pressurized sewer pipe conveying manure provided that the pipe meets ASTM specification D−2241, with standard dimension ratio of 21 or less or pressure pipe meeting the requirements of s. NR 110.13 or 811.62;

12. Fuel oil tank, serving a single family residence including any associated surface or buried piping;

14. Vertical shaft installed below grade used for intake of air for a heating or air conditioning system; or

15. Buried sanitary collector sewer serving 4 or fewer living units or having a diameter of 6 inches or less; or

16. Surface or basement liquid petroleum product tank with a capacity less than 1,500 gallons.

Note: The department recommends that potable wells be installed at least 25 feet from an agricultural crop field, sludge or septage landspreading or drying area.

(c) Fifty feet between a well or reservoir and a:

1. POWTS dispersal component or a soil absorption unit receiving less than 12,000 gallons per day of design wastewater flow, including any existing, replacement or abandoned POWTS dispersal component or a soil absorption unit, within 3 years of abandonment, but not including a school soil absorption unit or a POWTS dispersal component. This subdivision includes absorption units both regulated and not regulated by ch. SPS 383, but does not include a separation requirement for school wells;

Note: For the minimum separation requirement for soil absorption units relative to school wells, see par. (e); for soil absorption units or POWTS dispersal components receiving more than 12,000 gallons per day of design wastewater flow see par. (f) 3.

2. Privy or pit privy;

3. Pet waste pit disposal unit;

4. Animal barn or animal shelter;

5. Animal yard;

6. Silo;

7. Buried sewer used to convey manure having pipe conforming to ch. SPS 384 that does not meet the specifications in par. (b);

8. Liquid tight manure hopper or reception tank;

9. Filter strip;

10. Buried sanitary collector sewer serving more than 4 living units or larger than 6 inches in diameter. The department's Bureau of Watershed Management, under s. s. 281.41, Stats., may approve the installation of a collector sewer at a distance of less than 50 feet from a well if the sewer is installed a distance of at least 25 feet from the well, and if, within a 50−foot radius of the well, the sewer pipe meets the AWWA requirements for water main equivalent type, and if the sewer is installed in a manner that meets the leakage requirements of AWWA C600;

Note: AWWA C600 is a standard for the "Installation of Ductile−Iron Water Mains and Their Appurtenances" and provides, in section 5.2, hydrostatic water−pressure testing methods and the allowable leakage allowances.

11. An influent sewer to a wastewater treatment plant;

12. The nearest existing or future grave site in cemeteries;

13. Wastewater treatment plant effluent pipe;

14. Buried pressurized sewer having pipe not conforming to ch. SPS 384;

15. Manure loading area;

16. Bulk surface storage tank or other container with a capacity less than or equal to 1,500 gallons for any solid, semi−solid or liquid product, including any associated above ground piping, but not including any associated buried piping regulated under par. (d) 1. This subdivision includes, but is not limited to petroleum barrels, drums, product tanks and waste oil tanks. This subdivision does not include septic, holding, and manure reception tanks; tanks regulated under par. (a) 11., fuel oil tanks regulated under par. (b) 12. or liquid propane tanks regulated under par. (a) 17.;

17. Barn gutter;

18. Animal barn pen;

19. Outlet from a milk house drain; or

20. Vegetated treatment area.

(d) One hundred feet between a well or reservoir and a:

1. Bulk surface storage tank with a capacity greater than 1,500 gallons or any bulk buried storage tank including, for both surface or buried tanks, regardless of capacity, any associated buried piping, for any solid, semi−solid or liquid product but not including those regulated under par. (b) 12. or (c) 16. This subdivision includes, but is not limited to petroleum product tanks, waste oil tanks and pesticide or fertilizer storage tanks not regulated under par. (a) 11. This subdivision does not include septic, holding and manure reception tanks;

2. Liquid−tight, fabricated manure or silage storage structure, in ground or at ground surface;

3. Wastewater treatment plant structure, conveyance or treatment unit;

4. Dry fertilizer or pesticide storage building or area when more than 100 pounds of either or both materials are stored, in packages or in bulk;

5. Well, drillhole or water system used for the underground placement of any waste, surface or subsurface water or any substance as defined in s. 160.01 (8), Stats.;

6. Stormwater infiltration basin or system;

7. Uncovered storage of silage on the ground surface;

8. Water−tight silage storage trench or pit;

9. Lift station.

10. Recycling facility or scrap metal processing facility;

11. Liquid−tight sludge drying bed; or

12. Pesticide or fertilizer mixing or loading area.

(e) Two hundred feet between a school well and a soil absorption unit receiving less than 8,000 gallons per day, existing or abandoned.

(ee) One hundred fifty feet between a well or reservoir and a temporary manure stack.

(f) Two hundred fifty feet between a well or reservoir and a:

1. Manure stack.

2. Earthen or excavated manure storage structure or waste storage facilities.

Note: Variances from the separating distances may be granted as specified in s. NR 812.43 for earthen storage and manure stacks constructed and maintained to the

Removed by Register March 2015 No. 711. For current adm. code see: http://docs.legis.wisconsin.gov/code/admin_code.

previous specifications of Soil Conservation Standards No. 425 or 312, or for waste storage facilities constructed and maintained to the present specifications of Natural Resources Conservation Service Standard No. 313.

3. Soil absorption unit receiving 8,000 or more gallons per day, existing, abandoned, or alternate.

4. Sludge landspreading or drying area.

5. An earthen silage storage trench or pit.

6. Liquid waste disposal system including, but not limited to a treatment pond or lagoon, ridge and furrow system and spray irrigation system.

Note: Variance from this separating distance may be granted for treatment ponds or lagoons constructed and maintained to an approval granted under ch. NR 213.

7. Salvage yard or junkyard.

8. A salt or deicing material storage area including the building structure and the surrounding area where the material is transferred to vehicles. This subdivision includes those structures or areas that store deicing material mixtures of sand and salt that have a salt content at or exceeding 5%, but does not include bagged deicing material.

9. Solid waste processing facility.

10. Solid waste transfer facility.

11. The boundaries of a landspreading facility for spreading of petroleum−contaminated soil regulated under ch. NR 718 while that facility is in operation.

(fm) Five hundred feet between a well and an existing quarry or proposed quarry expansion.

(g) Twelve hundred feet between a well or reservoir and:

1. The nearest edge of the limits of filling of an existing, proposed or abandoned landfill, measured to the nearest fill area of abandoned landfills, if known. Otherwise measured to the nearest property line where the landfill is located. The department may require, as part of a variance request, a land survey map, a scaled diagram of the landfill and the well location, or another accurate measurement method to determine and demonstrate the distance between the landfill and the well;

2. The nearest edge of a coal storage area in excess of 500 tons; or

3. A hazardous waste treatment facility regulated by the department.

TABLE A
MINIMUM SEPARATION DISTANCE REQUIREMENTS BETWEEN POTABLE OR NONPOTABLE WELLS, RESERVOIRS, SPRINGS AND POSSIBLE SOURCES OF CONTAMINATION

For the list according to separation distance, see s. NR 812.04 (4)

New installations shall meet the separation requirements in the far−right column. Existing installations shall meet the separation requirements in effect at the time of construction, those in effect at the time of installation of the possible source of contamination, if later, or the requirements adopted on October 1, 2014

Source	Prior to@ Oct. 1975	Oct. 1975 to Oct. 1981	Oct. 1981 to Jan. 1991	Feb. 1991 to Oct. 1994	Oct. 1994	After Oct. 1, 2014
Absorption Unit (field), soil [See Soil Absorption Unit] (Also known as a POWTS dispersal component)	50	50	50	50	50	50
Agricultural crop field Note: Not a requirement—only a recommendation	None	None	None	None	None	25′ recommended
Air shaft−heating/air conditioning (Vertical, Below grade)	None	None	None	None	25′	25′
Animal Barn	—	—	—	—	—	50′
Animal Barn Pen	None** (25/20)**	25′	25′	25′	25′	50′
Animal Shelter (not including small residential pet shelter or pet kennel housing 5 or fewer adult pets)	None** (50/25)**	50′	50′	50′	50′	50′
Animal Yard—Includes Calf Hutch (but not including residential lot dog kennel enclosing 5 or fewer adult pets)	None**	50′	50′	50′	50′	50′
Barn, Animal	—	—	—	—	—	50’
Barn Gutter	None** (25/18)**	25′	25′	25′	25′	50′
Building Overhang (from centerline of well)	2′	2′	2′	2′	2′	None ^
Cemetery Grave Sites	None*	100′	100′	50′	50′	50′
Cistern	10′	10′	10′	8′	8′	8′
Coal Storage (greater than 500 tons)	None*	None*	None*	1,200′	1,200′	1,200′
Composting Site (See Solid Waste Processing Facility)	None	None	None	None	250′	250′
Culvert, stormwater	None	None	None	None	None	8′
Discharge to ground from a Water Treatment Device	None	None	None	25’	25’	None
Ditch−Edge of	None	None	None	None	25′	8′
Doghouse or kennel housing 5 or fewer adult pets on residential lot	None	None	None	50′	8′	8′
Downspout Outlet (Rainwater, including the discharge therefrom)	10′	10′	10′	8′	8′	None
Drain — Sanitary building (having pipe conforming to ch. SPS 384) (Buried)	10′	8′	8′	8′	8′	8′
Drain — Sanitary building (not having pipe conforming to ch. SPS 384) (Buried)	10′	25′	25′	25′	25′	25′
DRAIN (any material) (Buried)						
— Clear Water Drain	10′	10′	10′	8′	8′	None
— Building−Foundation Drain	10′	10′	10′	8′	8′	None
— Building−Foundation Drain — Sewer Connected	15′	15′	15′	8′	8′	None

Removed by Register March 2015 No. 711. For current adm. code see: http://docs.legis.wisconsin.gov/code/admin_code.

Source	Prior to@ Oct. 1975	Oct. 1975 to Oct. 1981	Oct. 1981 to Jan. 1991	Feb. 1991 to Oct. 1994	Oct. 1994	After Oct. 1, 2014
Drillhole used for the underground placement of any waste, surface water or any substance as defined in s. 160.01 (8), Stats.	None	None	None	None	100′	100′
Fertilizer or Pesticide Storage Tank (any size, surface or buried) (This distance applies only for nonpotable wells)	None	None	None	8’	8′	8′
Fertilizer or Pesticide, any size Buried Storage Tank or surface tank >1,500 gal (This distance applies only for potable wells)	None	None	None	100′	100′	100′
Filter Strip	None	None	None	50′	50′	50′
Fuel Oil Tank — Buried	None*	100′ (25′ Allowed for Private Res. Lots Only)	100′ (25′ Allowed for Private Res. Lots Only)	100′ (Including any associated buried piping) (25′ allowed for tanks serving single family residences)	100′ (Including any associated buried piping) (25′ allowed for tanks serving single family residences)	100′ (Including any associated buried piping) (25′ allowed for tanks serving single family residences)
Fuel Oil Tank Serving a Single Family Residence	None	25′ Allowed for Private Res. Lots Only	25′ Allowed for Private Res. Lots Only	25′	25′	25′ (Including any associated piping)
Fuel Oil Tank—Surface (>1,500 gallons) (including any associated piping)	None*	None*	None*	100′	100′	100’ (Including any associated piping)
Fuel Oil Tank—Surface (<1,500 gallons)	None*	None*	None*	None*	None*	25′
Fertilizer or Pesticide (Dry) Storage Area or Building (more than 100 pounds)	None	None	None	None	100′	100′
Gasoline or Other Petroleum or Liquid Product Tank — Buried (Does not apply to separation distance between Liquid Propane tanks and wells serving single family residences)	None*	100′	100′	100′ (Including any associated buried piping)	100′ (Including any associated buried piping)	100′ (Including any associated piping)
Gasoline or Other Petroleum or Liquid Product Tank — Surface (< 1,500 gallons, including any associated buried piping)	None	None	None	None	None	25′
Gasoline or Other Petroleum or Liquid Product Tank — Surface (>1,500 gallons, including any associated piping)	None*	None*	None*	100′	100′	100′
Glass Lined Feed Storage Facility (Harvester−Type Silos)	None**	25′	25′	50′	50′	50′
Grease Interceptor (Trap) (Buried)	25′	25′	25′	25′	25′	25′
Hazardous Waste Treatment Facility Regulated by DNR	None*	None*	None*	1,200′	1,200′	1,200′
Heat exchange drillhole	None	None	None	None	None	None
Holding Tank (Wastewater)	None	25′	25′	25′	25′	25′
(Also known as a POWTS holding component)						
Infiltration basin or system, Stormwater	None	None	None	None	100′	100′
Junkyard or Scrap Yard	None	None	None	250’	250’	250′
Kennel on residential lot enclosing 5 or fewer adult pets	None	None	None	50′	8′	8′
Kennel, other than above	None	None	None	50′	50′	50′
Lagoon, Treatment (See liquid waste disposal system)	—	—	—	—	—	—
Lake Shoreline (Measured to the edge of the floodway)	None*	25′	25′ (60′ For Schools and High Cap. Wells)	25′	25′	25′
Landfills (existing, proposed or abandoned) (Distance to Nearest Fill Area of abandoned landfills if Known; Otherwise to the Property Line)	None*	400 yards	400 yards	1,200′	1,200′	1,200′
Lift Station##	—	—	—	##	100′	100′
Liquid Propane (L.P.) gas tank (buried) (Applies only to wells serving a single family residence. For other wells see NR 812.04(4)(d)1.)	None	None	None	None	None	8’
Liquid Waste Disposal System	None	250′	250′−300′	250′#	250′#	250′#
Manure Hopper or Reception Tank — Liquid−Tight	None*	75′	75′−150′	50′	50′	50′
Manure Loading Area	None	None	None	None	50′	50′
Manure Stack, — Temporary	None	100′	100′	250′	150′	150′
Manure — Storage Structure (Earthen, Excavated or Non−liquid tight)	None*	250′	250′−300′	250′***	250′***	250′***
Manure Storage Structure (Fabricated, Liquid−Tight)	None*	100′	100′−175′	100′	100′	100′

Removed by Register March 2015 No. 711. For current adm. code see: http://docs.legis.wisconsin.gov/code/admin_code.

Source	Prior to@ Oct. 1975	Oct. 1975 to Oct. 1981	Oct. 1981 to Jan. 1991	Feb. 1991 to Oct. 1994	Oct. 1994	After Oct. 1, 2014
Manure — Storage Basin — Liquid–Tight Concrete Floor with an Acceptable Drainage Facility	None*	100′	150′–300′	Now in category of Manure Storage Structure	Now in category of Manure Storage Structure	Now in category of Manure Storage Structure
Milk house drain outlet	None**	None**	None**	None**	None**	50’
Mound System (Measured to the toe of the mound)	50′	50′	50′	50′	50′	50′
(Also known as POWTS dispersal component.)						
Nonpotable Well	None*	None*	None*	8′	8′	8′
Pesticide or Fertilizer (Dry) Storage Area or Building (More than 100 Pounds)	None	None	None	None	100′	100′
Pesticide or Fertilizer Storage Tank (not buried) — less than 1,500 gallons (this distance applies only for non-potable wells)	None	None	None	8′	8′	8′
Pesticide or Fertilizer Storage Tank — Buried tank, any size, or any surface tank >1,500 gal (this distance applies only for potable wells)	None	None	None	100′	100′	100′
Pet Waste Pit Disposal Unit	None*	50′	50′	50′	50′	50′
Pet animal shelter or kennel on residential lot and housing not more than 5 adult pets.	None	None	None	50′	8′	8′
Pet animal shelter or kennel housing more than 5 adult pets or not on residential lot.	None	None	None	50′	50’	50′
Petroleum Product Tank — Surface — less than 1,500 gallons capacity	None*	None*	None*	None*	None*	25′
Petroleum Product Tank —Surface — greater than or equal to 1,500 gallons capacity	None*	None*	None*	None*	None*	100′
Pits — Noncomplying	None	10′	10′ (20′ For Schools, WWTP′s, and High Capacity — Including Approved Pits)	8′	8′	8′
Plastic Silage Storage and Transfer Tube	None	None	None	8′	8′	8′
Pond (Measured to nearest high water edge)	None	None	None	None	None	25′
Pond, Stormwater detention (Edge of)	None	None	None	None	25′	25′
Pond, synthetically–lined decorative yard pond on a residential lot	—	—	—	—	—	None
Pond, treatment (See liquid waste disposal system)	—	—	—	—	—	—
POWTS holding component	25′	25′	25′	25′	25′	25′
(Also known as a holding tank.)						
POWTS treatment component	25′	25′	25′	25′	25′	25′
(Includes septic tanks, aerobic treatment units or filters)						
POWTS dispersal component	50′	50′	50′	50′	50′	50′
(Also known as a soil absorption unit or mound.)			(200′ for schools)	(200′ for schools)	(200′ for schools)	(200′ for schools)
Privy	50′ (Sewage Disposal Units)	50′	50′	50′	50′	50′
(Also known as pit privy)						
Quarry (See s. NR 812.12 (16) for well construction requirements for wells to be constructed within 500 feet of a quarry.)	—	—	—	###	###	500′
Recycling Facility	None	None	None	None	None	100′
Reservoir — Noncomplying	10′ (Cistern)	10′	10′	8′	8′	8′
Ridge and Furrow System (See liquid waste disposal system)						
River or Stream Edge (Measured to the edge of the floodway)	None*	25′	25′ (60′ For Schools and High Cap. Wells)	25′	25′	25′
Salt or Deicing Material Storage Area (Including structure and area surrounding where material is transferred to vehicles) (This category includes sand & salt mixtures if salt content of mixture is 5% or more)	None*	None*	None*	250′	250′	250′
Salvage Yard	None*	None*	None*	250′	250′	250′
Scrap Metal Processing Facility	None	None	None	None	None	100′

Removed by Register March 2015 No. 711. For current adm. code see: http://docs.legis.wisconsin.gov/code/admin_code.

Source	Prior to@ Oct. 1975	Oct. 1975 to Oct. 1981	Oct. 1981 to Jan. 1991	Feb. 1991 to Oct. 1994	Oct. 1994	After Oct. 1, 2014
Septage Landspreading Area	None	None	None	None	None	25′ recommended
Note: Not a requirement—only a recommendation						
Septic Tank (Also known as a POWTS treatment component)	25′	25′	25′	25′	25′	25′
SEWER (ch. SPS 384 Materials) (Buried)						
—Manure/Gravity sewer	8′	8′	8′	25′	25′	25′
—Manure/Pressurized sewer	8′	8′	25′	25′	25′	25′
—Sanitary Building/Gravity sewer	8′	8′	8′	8′	8′	8′
—Sanitary Building/Pressurized sewer	8′	25′	25′	25′	25′	25′
—Sanitary Collector sewer° (Serving ≤ 4 living units or ≤ 6″diameter)	8′	50′	50′	50′	25′	25′
—Sanitary Collector sewer° (Serving > 4 living units or > 6″ diameter)	8′	50′	50′	50′	50′	50′
—Influent sewer	50′	50′	50′	50′	50′	50′
—Storm Collector sewer (≤ 6″ diameter)	8′	50′	50′	50′	25′	25′
—Storm Collector sewer (> 6″ diameter)	8′	50′	50′	50′	50′	50′
SEWER (not ch. SPS 384 Materials) (Buried)						
—Manure/Gravity sewer	25′	25′	25′	25′	25′	25′
—Manure/Pressurized sewer	25′	50′	50′	50′	50′	50′
—Sanitary Building/gravity sewer	25′	25′	25′	25′	25′	25′
—Sanitary Building/Pressurized sewer	25′	25′	25′	25′	50′	50′
—Storm Building sewer	25′	25′	25′	25′	8′	None
—Sanitary Collector sewer°	25′	50′	50′	50′	50′	50′
—Storm Collector sewer	25′	50′	50′	50′	50′	8’
—Influent sewer	50′	50′	50′	50′	50′	50′
Shoreline—Lake, River or Stream [Measured as indicated in subd. (4) (b) 7.]	None*	25′	25′ (60′ For Schools and High Capacity Wells)	25′	25′	25′
Silage Storage, Earthen Trench or Pit	None*	100′	100′ – 175′	250′	250′	250′
Silage Storage Structure (Fabricated liquid−tight) (In−ground or surface)	None	None	None	None	100′	100′
Silage Storage — Surface, Uncovered	None	None	None	None	100′	100′
Silage Storage Tube (Plastic)	None	None	None	8′	8′	50’
Silo With Pit	None**	50′	50′	50′	50′	50′
Silo Without Pit But With Concrete Floor and Drain	None**	25′	25′	50′	50′	50′
Single application landspreading of petroleum−contaminated soil	—	—	—	—	250′	250′
Sludge Drying Bed, Liquid−tight	None	None	None	None	None	100
Sludge Landspreading or Drying Area	None*	200′	200′	250′	250′	25′ recommended
Note: Not a requirement—only a recommendation						
Soil Absorption Unit (<12,000 gal/day, includes alternate unit) (Also known as POWTS dispersal component)	50′	50′	50′ (200′ for schools as of 1978)	50′ (200′ for schools)	50′ (200′ for schools)	50′ (200′ for schools)
Soil Absorption Unit (≥12,000 gal/day, existing or abandoned) (Also known as POWTS dispersal component)	50′	50′	50′ (200′ for schools as of 1978)	250′	250′	250′
Solid Waste Processing Facility (Including composting facilities)	None	None	None	None	250′	250′
Solid Waste Site (See Landfill)						
Solid Waste Transfer Facility	None	None	None	None	250′	250′
Spray Irrigation Waste Disposal Site (See liquid waste disposal system)						
Stormwater detention pond or basin	None	None	None	None	25′	25′
Stormwater infiltration basin or system	None	None	None	None	100′	100′
Sump — Clear water	None	None	None	8′	8′	None
Sump—Wastewater (Watertight) (formerly cast−iron equivalent)	None*	8′	8′	25′	25′	8′
Sump—Wastewater (not watertight or equivalent to cast iron)	None*	25′	25′	25′	25′	25′
Swimming Pool (from edge of water)	None*	25′ (Below ground)	25′ (Below ground)	25′ (Below ground)	8′ (above or below ground)	8′ (above or below ground)
Temporary Manure Stack	None	100′	100′	250′	150′	150′

Removed by Register March 2015 No. 711. For current adm. code see: http://docs.legis.wisconsin.gov/code/admin_code.

Source	Prior to@ Oct. 1975	Oct. 1975 to Oct. 1981	Oct. 1981 to Jan. 1991	Feb. 1991 to Oct. 1994	Oct. 1994	After Oct. 1, 2014
Vegetated Treatment Area	None	None	None	50′	50′	50′
(Previously known as a Filter Strip)						
Waste Disposal Site (See Landfill)						
Wastewater Treatment Plant Effluent Pipe	None	None	None	50′	50′	50′
Wastewater Treatment Plant Structure, Conveyance or Treatment Unit	None*	None	150′	100′	100′	100′
Well or drillhole used for underground placement of any waste, surface water or any substance as defined in s. 160.01, Stats.	None	None	None	None	100′	100′
Yard Hydrant	None	10′	10′	8′	8′	None, but not allowed to be installed in or on well

^ The department recommends that a well be separated from any adjacent building such that the centerline of the well, extended vertically, will clear any projection of the building by not less than two feet.

° The minimum separating distance between a well and a collector sewer serving more than 4 living units or larger than 6 inch diameter is 50 feet regardless of whether the well or the sewer was installed first.

* "None" Although there were no minimum separation distances required by the code between these possible sources of contamination and a well or reservoir prior to 1975, and in some cases, prior to 1981, it is strongly recommended that the present standard minimum separation distance requirements be met whenever possible.

** Distances were developed under the Public Health Service Grade A Milk Ordinance and have been used by the department of agriculture, trade and consumer protection field inspectors.

*** Variances from these separating distances may be granted for earthen manure storage and temporary manure stacks meeting specifications of Soil Conservation Service Standards No. 425 and 312, respectively.

Variances from this minimum separating distance may be granted for treatment ponds or for storage or treatment lagoons constructed and maintained to the requirements of an approval granted under ch. NR 213.

After Feb. 1, 1991 and prior to October 1, 1994 the minimum separating distance between a well or reservoir and a lift station is based on the presence of a sewer force main at the lift station.

Between Feb. 1, 1991 and October 1, 2014, NR 812.12 (16) required that when a quarry was located within 1200 feet of any proposed well, the upper enlarged drillhole and well casing pipe depth requirements were to be referenced from the bottom of the quarry. Effective October 1, 2014, NR 812.12 (16) states the requirements for when a quarry is located within 500 feet of any proposed water well.

@@ While there is no minimum separation distance requirement between a potable well and a heat exchange drillhole, if the construction or operation of a geothermal heat exchange drillhole system adversely affects the operation of any private wells on neighboring properties, the department approval of the geothermal heat exchange drillhole system will not negate the protection to which private well owners are entitled under Wisconsin case law relating to groundwater. The department approval also does not relieve the well driller, property owner or geothermal heat exchange drillhole system operator of any liability which may result from injury or damage suffered by any person upon operation of the geothermal heat exchange drillhole system. (This means that if a nearby property owner can demonstrate that their water supply well has been adversely affected by the construction or operation of the geothermal heat exchange drillhole system, there is case−law precedent that would help support a claim brought by a neighbor to try to mitigate any negative impacts caused by the construction or operation of the system. The injured party may seek relief under the modified reasonable use doctrine set forth in *State of Wisconsin v. Michels Pipeline Construction, Inc.*, 63, Wis. 2nd, 278 (1974).

@ There are several code revisions prior to 1975. The dates of these revisions and the minimum separating distances were as follows:

Contamination Source	April 24, 1936	March 1939	July 1951	April 10, 1953	May 1, 1971
Building Overhang	2′	2′	2′	2′	2′
Cistern	None	None	10′	10′	10′
Downspout	None	None	10′	10′	10′
Drain					
— Building Foundation	10′	10′	10′	10′	10′
— Sewer Connected Building Foundation	10′	10′	15′	15′	15′
— Clear Water	None	None	10′	10′	10′
— Cast Iron (With Lead Joints)	10′	10′	10′	10′	10′
Grease Trap (Watertight)	None	None	25′	25′	25′
Septic Tank	None	None	25′	25′	25′
Sewage Disposal Unit (Absorption Field)	None	None	50′	50′	50′
Sewer					
—Cast Iron (With Lead Joints)	10′	10′	8′	8′	8′
—Not Cast Iron or equivalent	25′	25′	25′	25′	25′

(5) HEAT EXCHANGE DRILLHOLE SEPARATION DISTANCES. Minimum separation distances between any heat exchange drillhole, water supply wells, and existing sources of contamination; or between new sources of contamination and existing heat exchange drillholes shall be maintained as described in this subsection. Separation distance requirements to possible sources of contamination will not be waived because of property lines. Minimum separating distances are ten feet between a heat exchange drillhole and each of the following:

(a) Non−municipal water supply well.

(b) Onsite waste disposal system.

(c) Buried fuel storage tank.

History: Cr. Register, January, 1991, No. 421, eff. 2−1−91; am. (1) (b) 1., (2) (a) to (c), (4) (a) 5., 9., 12. and 13., (b) 1., 5., 7., 11. and 13., (c) 10. to 13., (d) 1. to 3., (f) 6. to 8., (g) 1. and Table A, cr. (1) (e), (4) (a) 14. and 15., (b) 14. and 15., (c) 14. and 15., (d) 4. to 9. and (ee), r. (4) (b) 8., Register, September, 1994, No. 465, eff. 10−1−94; corrections made under s. 13.93 (2m) (b) 7., Stats., Register, September, 1994, No. 465**;** correction in (4) (d) 1. made under s. 13.93 (2m) (b) 7., Stats., Register, September, 1996, No. 489; cr. (4) (f) 11., am. Table A, Register, December, 1998, No. 516, eff. 1−1−99; corrections made under s. 13.93 (2m) (b) 7., Stats., Register, December, 1998, No. 516; CR 05−020: am. (4) (g) 1. Register January 2006 No. 601, eff. 2−1−06; CR 09−123: am. (4) (b) 11. Register July 2010 No. 655, eff. 8−1−10; correction in (4) (a) 1., 2., 4., (b) 4., 5., (c) 7., 10. b., 14., (d) 1., Table A made under s. 13.92 (4) (b) 7., Stats., Register December 2011 No. 672; **CR 13−096: am. (title), (4) (intro.), (a) 1., 2., cr. (5), CR 13−099: am. (1) (intro.), (b) (intro.), r. (1) (b) 1., 2., cr. (1) (f), am. (2) (a) to (c), cr. (2) (d) to (g), am. (4) (intro.), (a) 1., 2., r. (4) (a) 3. to 6., 8., am. (4) (a) 11., r. (4) (a) 13., am. (4) (a) 14., 15., cr. (4) (a) 16. to 18., am. (4) (b) 2. to 4., 7., r. (4) (b) 9., 10., am. (4) (b) 12., r. (4) (b) 13., am. (4) (b) 15., cr. (4) (b) 16., am. (4) (c)**

Removed by Register March 2015 No. 711. For current adm. code see: http://docs.legis.wisconsin.gov/code/admin_code.

1., 2., 4., renum. (4) (c) 10. (intro.) to 10. and am., r. (4) (c) 10. a., b., cr. (4) (c) 16. to 20., am. (4) (d) 1., 4., 6., cr. (4) (d) 10. to 12., am. (4) (f) 2., 7., 8., cr. (4) (fm), am. Table A Register September 2014 No. 705, eff. 10−1−14; correction in (4) made under s. 35.17, Stats., Register September 2014 No. 705.

NR 812.09 Department approvals. (1) REVIEW PERIOD. Unless another time period is specified by law, the department shall complete its review and make a determination on all applications for licenses or approvals within 65 business days after receipt of a complete application. Incomplete applications will be returned. The start of the 65 day review period will not begin until a complete application is received by the department. All requests for approval shall be in writing, except that for situations that require immediate response, an approval may be requested verbally and an advanced verbal approval may be granted by the department and followed up with a written confirmation.

(2) APPROVAL APPLICATION AND SUBMISSION. The property owner or lessee shall obtain a written approval from the department. When an application is submitted by someone other than the owner of the subject property, the owner or authorized agent shall sign the application. Application information, outlines or forms may be obtained from the department. Applications shall provide information regarding the owner's and operator's name, address and firm name, if applicable, and any other information requested by the department. The department may request, but is not limited to descriptions or sketches of well construction, geology, pump installation, plumbing, possible contamination sources, property boundary, water use and, water sample results, depending on the type of application.

(3) PLANS AND SPECIFICATION PREPARATION. Plans and specifications for a school water system shall be submitted by a registered professional engineer or well driller for wells, and by a registered professional engineer or pump installer for pumps, discharge piping, storage tanks and controls. Plans and specifications for a wastewater treatment plant water system shall be submitted by a registered professional engineer, by a well driller for the well or a pump installer for the pump. If construction or installation of a water system described in this subsection has not commenced within 2 years of approval date, the approval is void.

(4) APPROVALS REQUIRED. Prior department approval is required for the activities described in this subsection. When deemed necessary and appropriate for the protection of public safety, safe drinking water and the groundwater resource, the department may specify more stringent well and heat exchange drillhole locations, well and heat exchange drillhole construction or pump installation specifications for existing and proposed high capacity, school or wastewater treatment plant water systems requiring approval by this subsection or water systems approved by variance. Approval by the department does not relieve any person of any liability which may result from injury or damage suffered by any other person. In addition, failure to comply with any condition of an approval or the construction, reconstruction or operation of any well or water system in violation of any statute, rule or department order shall void the approval. Approval is required for:

(a) The construction, reconstruction, or operation of a high capacity well or well system, including dewatering wells. An application for a high capacity well or well system approval shall include, for every well, the location, construction or reconstruction features, pump installation features, the proposed rate of operation and the distance to nearby public utility wells, as defined in s. 196.01, Stats.

1. The department may deny approval, grant a limited approval or modify an approval under which the location, depth, pumping capacity or rate of flow and ultimate use is restricted so that the supply of water for any public utility, as defined by s. 196.01, Stats., will not be impaired. Reduced availability of groundwater to a public utility well may be indicated when calculations using estimated values for aquifer characteristics result in 10 or more feet of water level drawdown in the public utility well based on 30 days of continuous pumping from the proposed high capacity well or well system. The department may also deny approval or condition an approval if the proposed or actual well location, well construction or pump installation features or the use of the well does not meet, at the time of application, the specifications of this chapter for new well construction and pump installation or water use.

2. When an owner or operator relinquishes control of the operation of a high capacity well or well system, a new approval shall be obtained by the new operator, owner or lessee before operation of the high capacity well or well system is continued.

3. The owner or operator of a high capacity well or well system shall submit pumpage and well water level reports to the department on department forms at the time periods indicated by the department.

4. Emergency approval for a high capacity well or well system may be granted when fire hazard, imminent crop damage or other similar emergency requires if the department determines that the high capacity well or well system proposed will not adversely affect or reduce the availability of water to a public utility, as defined in s. 196.01, Stats.

5. High capacity test drillholes or up to 2 geothermal heat exchange drillholes may be constructed without approval to test for aquifer yield to determine if a high capacity well, heat exchange drillhole, or well system is feasible. The well casing pipe for such test drillholes shall not exceed 6−inch diameter unless the well driller notifies the department. High capacity test drillholes may be test pumped at a rate of 70 gallons per minute or more if the test does not last more than a total of 72 hours. After testing, the drillhole shall be filled and sealed, according to the requirements of s. NR 812.26 or shall be converted, following approval, to a high capacity well, heat exchange drillhole, or well system which meets the requirements of this chapter or ch. NR 811 and of any approved plans and specifications within 90 days.

Note: *State v. Michels Pipeline Construction, Inc.*, 63 Wis.2d 278, 217 N.W.2d 339 (1974) established that the doctrine of reasonable use applies to property rights in groundwater. Persons adversely affected by the operation of a high capacity well or well system may take action against the operator or owner of the high capacity well or well system.

(b) The construction, reconstruction or operation of a school or wastewater treatment plant well or water system.

(c) Installation of water treatment devices or chemical addition to a well or water system as specified in s. NR 812.37.

(d) A variance from any provision of this chapter.

(e) The construction of a granite or other crystalline bedrock well with less than 40 feet of well casing pipe.

(f) The construction or reconstruction of a well located in designated special well casing pipe depth areas.

Note: A list of these special well casing pipe depth areas is available from the department.

(g) The construction of a well open to both an unconsolidated formation and a bedrock formation.

(h) The use of the Halliburton grouting methods or the grout displacement grouting method as described in s. NR 812.20 (3) (e), (f) and (g) for wells when the upper enlarged drillhole is more than 200 feet deep or when drilling mud or bentonite slurry has not been circulated up to the ground surface in the annular space prior to grouting.

(i) The development of a spring for use as a potable water supply as provided in s. NR 812.25.

(j) The construction or reconstruction of a pit as provided in s. NR 812.36 or in s. NR 812.42 (2).

(k) The installation of a hung well casing pipe or a hung liner.

(L) The use of well drilling aids and additives, grout, sealing or well filling and sealing materials and additives and well rehabilitation materials.

(m) The construction or reconstruction of a dug well as provided in s. NR 812.24.

(n) Well casing pipe testing procedures.

Removed by Register March 2015 No. 711. For current adm. code see: http://docs.legis.wisconsin.gov/code/admin_code.

(o) The use of pitless adapters, pitless units, above ground discharge units, vermin−proof caps and seals and any treatment equipment to be installed directly in a well. The department may prohibit the use of any water supply equipment if the department finds there is substantial evidence that the equipment poses a significant hazard to safe drinking water or the groundwater. The department shall state its findings and conclusions in writing to the manufacturer, the licensed well drillers or pump installers, or both, and the industry representatives including the Wisconsin Water Well Association and the Wisconsin Pump and Well Suppliers Association. The effective date of the prohibition will have a 6 month delay for any well casing pipe product or a 12 month delay for other water supply equipment.

(p) The installation of a pressure tank with a volume greater than 1,000 gallons.

(q) The installation of a cathodic protection drillhole.

(r) The continued operation of a well or drillhole that meets the criteria in s. NR 812.26 (2) that requires permanent filling and sealing of the well or drillhole.

(s) The development of surface water for use as a potable water supply.

(t) Noncontinuous−slot well screens as specified in s. NR 812.13 (1) (e).

(v) The use of a nonpressure storage vessel other than a surge tank.

(w) The construction or reconstruction of a well on a property that is listed on the department's geographic information system registry of closed remediation sites.

(x) The construction of 10 or more heat exchange drillholes, or where the sum of the depths of all heat exchange drillholes is greater than 4000 feet, for a single drilling site.

(y) Any heat exchange drillhole greater than 400 feet in depth.

(z) Any heat exchange drillhole within 400 feet of a municipal water supply well.

Note: Conditions that warrant variation from the original proposed project design, require consultation with the department and the heat exchange driller will be required to obtain a variance, as specified in s. NR 812.09(4) (d).

Note: The GIS Registry of Closed Remediation Sites has been renamed the GIS Registry. It is now a layer on the map view, RR Sites Map. Information about a specific site can be found in the tracking system, BRRTS on the Web. Both these applications can be found at http://dnr.wi.gov/topic/Brownfields/clean.html.

(5) APPROVAL VERIFICATION. A well or heat exchange driller, well constructor, pump installer or contractor shall obtain a copy of the approval for any activity identified in sub. (4) prior to the initiation of any work on a well, heat exchange drillhole, pump installation or water system. When necessary and appropriate the department may grant a verbal approval to a well or heat exchange driller, pump installer or contractor to initiate an activity before obtaining a written copy of the approval provided the conditions of the approval are complied with.

(6) PERMIT VERIFICATION. A well driller, well constructor, pump installer or contractor shall obtain required permits from counties authorized to administer this chapter under ch. NR 845.

History: Cr. Register, January, 1991, No. 421, eff. 2−1−91; am. (4) (intro.), (a) 1., (4) (l), (5) and (6); cr. (4) (u) and (v), Register, September, 1994, No. 465, eff. 10−1−94; corrections made under s. 13.93 (2m) (b) 7., Stats., Register, September, 1994, No. 465; r. (4) (u), Register, September, 1996, No. 489, eff. 10−1−96; CR 00−111: cr. (4) (w), Register October 2001 No. 550, eff. 11−1−01; correction to (6) made under s. 13.93 (2m) (b) 7., Stats., July 2002 No. 559; **CR 13−096: am. (4) (intro.), (q), cr. (4) (x), (y), (z), am. (5), CR 13−099: am. (4) (a) 5., (L), (r) Register September 2014 No. 705, eff. 10−1−14.**

Subchapter II — New Water Well and Heat Exchange Drillhole Construction and Reconstruction and Filling and Sealing of Wells and Drillholes

NR 812.10 Well and heat exchange driller and well constructor requirements. (1) LICENSE. Well and heat exchange drillers shall hold a valid Wisconsin well or heat exchange drilling license. The name of the driller and the drilling license number shall be displayed on all well drilling rigs used in the construction of wells. The letters and numbers shall be at least 2 inches in height with at least 1/4 inch wide brush stroke. The identification shall have a sharp color contrast with the background on which it is applied. The identification shall remain legible.

(2) LOCATION. Well and heat exchange drillers and well constructors shall be responsible for proper location of a well or heat exchange drillhole. Wells shall be located in sanitary locations and meet the minimum separation requirements specified in s. NR 812.08. Separation distance requirements to possible sources of contamination will not be waived because of property lines. Water wells may not be constructed within 1,200 feet of a landfill site without a variance. Variances from minimum separation distance requirements require approval. If the property is located within the area served by a municipally owned water system, the water well driller or well constructor shall notify the well owner of the need to obtain a private well operational permit from the municipality.

(3) EQUIPMENT AND MATERIALS. Well and heat exchange drillers and well constructors shall be adequately equipped to comply with the well construction requirements of ss. NR 812.11 to 812.16 and Tables I−IV. All materials installed in a well or heat exchange drillhole shall be new, unused and approved for use, except as specified in s. NR 812.26 (5). The department may prohibit the use of any material or equipment that poses a significant hazard to public health, safe drinking water or groundwater.

(4) CONSTRUCTION METHODS. Well and heat exchange drillers and well constructors shall comply with this chapter in the construction and reconstruction of all wells or heat exchange drillholes. Adequate protection shall be provided for the top of the drillhole and the top of the well casing pipe to prevent surface contamination from entering the well or heat exchange drillhole during the drilling operation and when the driller is not at the drilling site. Well construction methods are depicted in figures 51 to 75.

(5) SPECIAL CASING AREAS. Well drillers and well constructors shall comply with the well casing pipe depth requirements in special well casing pipe depth areas established by the department where aquifers have been contaminated or in other special areas. Heat exchange drillers shall contact the department to discuss any special construction or installation requirements. A list of the special well casing pipe depth areas and the special casing pipe depth requirements may be obtained from the department.

Note: In some of these special casing areas, wells are approved by the department on a case by case basis. There are other areas where special well construction requirements are necessary. These areas include sites on the department's geographic information system registry of closed remediation sites, as identified in s. NR 812.12 (15).

(6) GROUTING AND SEALING. Well and heat exchange drillers and well constructors shall be responsible for completing all grouting and sealing requirements using the mixtures and methods of s. NR 812.20. Grouting methods are depicted in figures 11 to 18. Heat exchange drillholes shall not remain open and ungrouted for more than 24 hours after completion.

(7) DEVELOPMENT AND TEST PUMP. Well drillers and well constructors shall, upon completion of the well, develop and test pump the well according to s. NR 812.22. The well shall be pumped and developed until the water is practicably clear and free of sand, and until a stable pumping water level is established.

(8) NONCOMPLYING WELLS. When a water well or heat exchange driller or well constructor has constructed a water well or heat exchange drillhole not initially located or constructed in compliance with this chapter, the water well or heat exchange driller or well constructor shall pay all costs for bringing the well or heat exchange drillhole into compliance with this chapter, including the costs of filling and sealing the well, if necessary, other than those costs that would have been charged for an initial complying well construction.

(9) PROBLEM WELLS. The well driller or well constructor shall return to the well site to attempt to correct problems when a potable well produces bacteriologically unsafe water; when a well pro-

Removed by Register March 2015 No. 711. For current adm. code see: http://docs.legis.wisconsin.gov/code/admin_code.

duces sandy or turbid water; or when failure of the well occurs due to a caving or sloughing formation. The well driller or well constructor shall return within 90 days after the well is completed or 30 days after the well is placed in service, whichever is longer. If noncomplying construction was not the cause of the problem, a fee may be charged by the well driller or well constructor for corrective work.

(10) NOTIFICATION OF CONTAMINATED WELLS. Well drillers and well constructors shall notify the well owner if the well driller or well constructor becomes aware that the water from the well contains contaminates in excess for the primary drinking water standards in ch. NR 809.

(11) COMPLETION OF THE WELL. In accordance with all requirements of s. NR 812.22 (6), the water well driller or his or her agent or the well constructor shall collect a water sample or samples, using his or her test pump, the well owner's pump, air−lift equipment or bailer, from any new or newly reconstructed, rehabilitated, redeveloped or reconditioned potable well, including driven point wells, no later than 30 days following completion of the well or work on the well. Each water sample shall be analyzed for coliform bacteria, nitrate and any water tests required when performing well construction or reconstruction in a special well casing depth area. Each water sample shall be analyzed for coliform bacteria by a laboratory certified by DATCP for bacteriological analysis of drinking water and having an agreement with the department for electronic submission of laboratory test reports to the department no later than 30 days after completion of the analysis, or to the Wisconsin state laboratory of hygiene. Each water sample shall also be analyzed for nitrate by a laboratory certified by the department for nitrate analysis of drinking water and having an agreement with the department for electronic submission of laboratory test reports to the department no later than 30 days after completion of the analysis. The water well driller or well constructor shall disinfect, flush and seal the well. The water well driller shall provide a copy of the laboratory test report(s) to the well owner no later than 10 days after receipt of the report(s) by the well driller. The water well driller or well constructor shall submit a well construction report to the well owner and to the department within 30 days following the date of completion of the well construction or reconstruction.

Note: The well driller or agent is required to have the water sample analyzed for bacteria. However, in some areas of Wisconsin the useable aquifer is contaminated throughout its entire vertical extent, so it may not be possible to obtain a bacteriologically safe water sample.

(11m) PRESSURE TESTING OF HEAT EXCHANGE LOOPS. Vertical heat exchange loop piping shall be pressure tested with potable water or an approved fluid in the loop, according to manufacturer's specifications.

(12) WELL NOTIFICATION REPORT VERIFICATION. A water well driller or well constructor shall either obtain a Well Notification or verify that the well owner has obtained a department Well Notification including the Notification Number, by obtaining a copy of the notification report, before the well construction operation is started.

(13) PERMIT VERIFICATION. A water well driller, well constructor, pump installer or contractor shall obtain required permits from counties authorized to administer this chapter under ch. NR 845.

History: Cr. Register, January, 1991, No. 421, eff. 2−1−91; am. (5), (9) and (11), Register, September, 1994, No. 465, eff. 10−1−94; corrections made under s. 13.93 (2m) (b) 7., Stats., Register, September, 1994, No. 465; CR 00−111: am. (2), Register October 2001 No. 550, eff. 11−1−01; **CR 13−096: am. (1) to (8), cr. (11m), CR 13−099: am. (2), (8), r. and recr. (11), cr. (12), (13) Register September 2014 No. 705, eff. 10−1−14; correction in numbering in (11m) made under s. 13.92 (4) (b) 1., Stats., Register September 2014 No. 705.**

NR 812.11 Well and heat exchange drillhole construction equipment & materials. (1) ADEQUACY OF EQUIPMENT. Water well and heat exchange drillers, water well and heat exchange drilling businesses and well constructors shall be adequately equipped to enable the individual, business and those who are supervised to fully comply with all legal requirements applicable to any well or drillhole construction, reconstruction or well or drillhole filling and sealing which is undertaken by the licensee or registrant and [or] any employees.

Note: The "or" in brackets was inserted by CR 13−096 and is inconsistent with the treatment by 13−099. Future rulemaking will address any wording inconsistencies.

(a) *Drill bits.* The diameter of drill bits shall be within 1/4″ of the diameter of any drillhole to be constructed. A drill bit more than 1/4″ smaller in diameter than the diameter of an upper enlarged drillhole to be constructed, may not be worked around within the drillhole to construct the specified diameter of the drillhole.

(b) *Conductor (tremie) pipes.* Any conductor (tremie) pipe used for grouting shall meet the requirements of s. NR 812.20 (2) (b).

(c) *Mud balances.* When rotary drilling mud and cuttings or clay slurry are used to seal the annular space of a well as specified by Tables I and II, a mud balance shall be used to determine that the mud weight is at least 11 pounds per gallon.

(d) *Test pumps.* A test pump shall be used to perform a well yield test upon completion of the well. A well yield test may be conducted using air−rotary equipment.

(2) MATERIALS. All materials permanently installed in a well shall be new, unused and approved for use except as specified in s. NR 812.26 (5). Lead compounds used to lubricate and seal drill stem joints or any equipment entering a potable water well may not be used. Materials containing lead having a lead content greater than 0.025% by weighted average, may not be installed in a potable water well. "Lead wool" or other products containing more than 0.025% lead may not be used as seals in the bottom of an open−ended well casing pipes or as screens terminating in coarse formations.

(a) *Well casing pipe.* Well casing pipe and liner pipe shall meet the requirements of s. NR 812.17.

(b) *Drive−shoes.* When a well casing pipe is driven, a drive−shoe shall be welded or threaded to the bottom of the well casing pipe according to s. NR 812.12 (5). Couplings may not be used for drive−shoes. When the upper enlarged drillhole extends 20 feet or more into bedrock and the annular space is cement grouted before the lower drillhole is constructed, the use of a drive−shoe is optional.

(c) *Gravel packs.* Gravel packs shall meet the requirements of s. NR 812.16.

(d) *Screens.* Screens shall meet the requirements of s. NR 812.13 (1) (e). Lead bottom seals are prohibited. Brass screens may not have a lead content of more than 8%.

(e) *Packers.* Packers shall comply with s. NR 812.13 (1) (e) 4. Lead packers are prohibited.

(f) *Centering guides.* Centering guides or drive shoes used as centering guides shall be installed in well casing pipe in bedrock wells as specified in s. NR 812.14 (1) (f).

(g) *Drilling aids.* Only approved drilling aids may be used in well and heat exchange drillhole construction and reconstruction. Approval of drilling aids is based on, but not limited to toxicity, groundwater contamination potential and expected effectiveness of the materials. A list of approved drilling aids is available from the department upon request.

History: Cr. Register, January, 1991, No. 421, eff. 2−1−91; corrections made under s. 13.93 (2m) (b) 7., Stats., Register, September, 1994, No. 465; **CR 13−096: am. (title), (1), (2) (intro.), (g), CR 13−099: am. (1) Register September 2014 No. 705, eff. 10−1−14.**

NR 812.12 General drilled type well and heat exchange drillhole construction requirements. (1) Every well and heat exchange drillhole shall be planned and constructed so that:

(a) It is adapted to the geologic and groundwater conditions of the proposed well or heat exchange drillhole site to ensure full utilization of every natural protection against contamination of the

Removed by Register March 2015 No. 711. For current adm. code see: http://docs.legis.wisconsin.gov/code/admin_code.

water bearing formation or formations and to exclude possible sources of contamination.

(b) Wells will produce bacteriologically safe water.

Note: In some areas of Wisconsin the useable aquifer is contaminated throughout its entire vertical extent. In such areas, it may not be possible to obtain bacteriologically safe water.

(c) Wells will provide an adequate and contaminant free water supply, where the natural geologic and groundwater conditions allow.

(d) It will conserve groundwater.

(e) It will allow reconstruction, when necessary.

(2) The construction of drilled wells shall comply with:

(a) The general and specific requirements outlined in ss. NR 812.13 to 812.16;

(b) The well casing pipe requirements of s. NR 812.17; and

(c) The requirements of Table I or II for low capacity potable wells, except school or wastewater treatment plant wells, but including noncommunity wells and nonpotable wells, or

(d) The requirements of Tables III and IV for potable high capacity, wastewater treatment plant and school wells.

(e) The well casing pipe depth requirements of ss. NR 812.13 to 812.16 and of Tables I to IV are such that the installed well casing pipe depth is referenced and measured from the ground surface, not from the top of the well casing pipe, at the time of completion of the well. A well is completed when all operations that require the use of drilling, driving or annular space sealing equipment have been completed.

Note: The requirements of Tables I–IV are based on the geologic formation encountered at or near the ground surface, the geologic formation in which the well terminates, the type of drilling method used, the depth to which the upper enlarged drillhole extends into bedrock, for bedrock wells, and the static water level for unconsolidated formation wells. For specific requirements relating to percussion method drilling and rotary method drilling, see ss. NR 812.13 and 812.14, respectively.

Removed by Register March 2015 No. 711. For current adm. code see: http://docs.legis.wisconsin.gov/code/admin_code.

TABLE I.

DRILLED UNCONSOLIDATED FORMATION WELL CONSTRUCTION REQUIREMENTS FOR POTABLE AND NON−POTABLE LOW CAPACITY WELLS (EXCEPT SCHOOL AND WASTEWATER TREATMENT PLANT WELLS) AND NON−POTABLE HIGH CAPACITY WELLS

LINE	NEAR SURFACE GEO-LOGIC MATERI-ALS	UPPER ENLARGED DRILLHOLE REQUIREMENTS						WELL CASING PIPE REQUIREMENTS			ANNULAR SPACE SEALING REQUIREMENTS		SCREEN REQUIREMENTS (ONLY REQUIRED FOR WELLS THAT PUMP SAND)	
		PERCUSSION METHODS			ROTARY METHODS			MIN. DIAMETER						
		MINIMUM DIAMETER	METHOD OF KEEPING HOLE OPEN	MINIMUM DEPTH	MIN. DIAM.	METHOD OF KEEPING HOLE OPEN	MIN. DEPTH	STEEL	THER-MO-PLASTIC	MIN. DEPTH	PERCUSSION METHODS	ROTARY METHODS	TYPE	METHOD OF PLACE-MENT
A.	Caving material of any kind (usually sand) down to 10 feet or more.	None required with steel well casing pipe. 4″ larger diameter than nominal diameter of well casing pipe, if one is con-structed for any reason; or if the well casing pipe is thermoplastic; or 2″ larger in diameter than the nominal diameter of the well casing pipe if steel casing pipe is assem-bled with welded joints and the annulars pace sealing material is placed with an approved pres-sure method.	Temporary outer casing when ther-moplastic well casing pipe is used; or when an upper enlarged drillhole is con-structed for any reason when steel well casing pipe is used. Drillhole shall be kept filled up to within 10 feet of the ground surface with clay or sodium benton-ite slurry during driving of steel well casing pipe. When temporary outer casing is used, it shall be pulled during or following sealing of the annular space.	None required when steel well casing pipe is used, but to the bottom of any non−caving layer or to the 20′ depth, whichever is the lesser if one is constructed for any reason. To the depth of well casing pipe set-ting when ther-moplastic well casing pipe is used. (Starter drillholes 10′ deep or less need not meet the requirements for upper enlarged drill-holes.)	2″ larger in diameter than the nominal diameter of the well cas-ing pipe, but only with steel pipe assembled with welded joints, other-wise 4″ larger in diameter than the nominal diameter of the well cas-ing pipe.	Circulated drilling mud to maintain drill hole at full diame-ter.	To the depth of the well casing pipe set-ting.	2″	4″	Whatever is greater: 25′ deep; or 10′ below static water level; and such that pump intake is set at least 5′ above the bottom of well casing pipe, & pump does not break suction under nor-mal operat-ing condi-tions.	None if steel well casing pipe is driven from the ground sur-face. When an upper enlarged drillhole is con-structed, the annular space shall be sealed with neat cement grout; or clay or sodium bentonite slurry with a mud weight of at least 11 pounds per gallon — Only sodium bentonite slurry or clay slurry (as specified above) when thermo-plastic well cas-ing pipe is used.	Neat cement grout or dril-ling mud and cuttings. If drilling mud and cuttings is used, it shall have a mud weight of at least 11 pounds per gallon.	Continu-ous Slot or approved: See NR 812.13 (1) (e). for accepta-ble screen materials. Louvered, shutter−type screens maybe used for gravel−pack well construc-tion as specified in s. NR 812.16 (3).	Bail−down, pull−back (telescop-ing), wash−down or jetting method. The screen may also be perma-nently attached to bottom of the string of well casing pipe and set in the upper enlarged drillhole.
B.	Non−caving material of any kind in the top 10′ (usually clay, silt or hardpan).	Upper enlarged drillhole is required.*4″ larger in diame-ter than the nominal diame-ter of the well casing pipe; or 2″ larger in diameter than the nominal diameter of the well casing pipe **i**f steel pipe assembled with welded joints & the annular space sealing material is placed using an approved pres-sure method. The full diame-ter of the drill-hole shall be maintained by a properly sized bit or by tempo-rary outer cas-ing.	Temporary outer casing when the thermoplastic well casing pipe is used. Drillhole shall be kept filled up to within 10′ of the ground surface with clay or sodium bentonite slurry during driv-ing of the steel well casing pipe. When temporary outer casing is used, it shall be pulled during or following sealing of the annular space.	To the bottom of any non−caving layer or to the 20′ depth, whichever is the lesser when steel well casing pipe is used; to the depth of well casing pipe set-ting when ther-moplastic well casing pipe is used**.**	Same as above.	Same as above.	Same as above.	2″	4″	Same as above.	Same as above.	Same as above.	Same as above.	Same as above.

Removed by Register March 2015 No. 711. For current adm. code see: http://docs.legis.wisconsin.gov/code/admin_code.

TABLE II.

DRILLED BEDROCK WELL CONSTRUCTION REQUIREMENTS FOR POTABLE AND NON−POTABLE LOW CAPACITY WELLS (EXCEPT SCHOOL AND WASTEWATER TREATMENT PLANT WELLS) AND NON−POTABLE HIGH CAPACITY WELLS

LINE	DEPTH TO FIRM BED-ROCK	NEAR SURFACE GEOLOGIC MATERIALS	UPPER ENLARGED DRILLHOLE REQUIREMENTS						WELL CASING PIPE REQUIRE-MENTS		ANNULAR SPACE SEALING REQUIREMENTS		LOWER DRILLHOLE REQUIREMENTS (IN BEDROCK)	
			PERCUSSION METHODS			ROTARY METHODS								
			MINIMUM DIAM-ETER	METHOD OF KEEPING HOLE OPEN	MINIMUM DEPTH	MIN. DIAM.	METHOD OF KEEPING HOLE OPEN	MIN. DEPTH	MIN. DIAM.	MIN. DEPTH	PERCUSSION METHODS	ROTARY METHODS	MIN. DIAM.	METHOD OF CUTTINGS REMOVAL
C.	40 feet or more; 30 feet or more for sand-stone	Caving mate-rial of any kind (usually sand)	Upper enlarged drill-hole not required; if one is constructed for any reason, it shall be 4″ larger in diameter than the nominal diameter of well cas-ing pipe; or 2″ larger in diameter than the nominal diameter of the well casing pipe if steel pipe is assem-bled with welded joints & the annular space sealing material is placed using an approved pressure method.	Upper enlarged drillhole not required; tempo-rary outer cas-ing pipe if one is constructed for any reason. The drillhole shall be kept filled up to within 10 feet of the ground sur-face with clay or bentonite slurry during driving of the perma-nent well casing pipe. Temporary outer casing shall be pulled during or fol-lowing sealing of the annular space.	Upper enlarged drill-hole not required; to the bottom of any non−cav-ing layer or to the 20′ depth, whichever is the lesser if one is con-structed for any reason.	2″ larger in diameter than the nominal diameter of the well casing pipe, but only with casing pipe assem-bled with welded joints, oth-erwise 4″ larger in diameter than the nominal diameter of the well casing pipe.	Circulated drilling mud to maintain the drillhole at full diameter.	To the top of firm bedrock, but not less than the cas-ing depth.	6″	To a firm seat in bed-rock.	Drilling mud and cuttings with a mud weight of at least 11 pounds per gallon or neat cement grout; except only neat cement grout if the upper enlarged drill-hole extends more than 5′ into bedrock.	Drilling mud and cuttings with a mud weight of at least 11 pounds per gallon or neat cement grout; except only neat cement grout if the upper enlarged drillhole extends more than 5′ into bedrock.	6″, but not less than the inside diameter of the well casing pipe.	Air or an approved foam, by bail-ing, or by cir-culated dril-ling mud.
D.	40 feet or more; 30 feet or more for sand-stone	Non−caving material of any kind in the top 10′. (usu-ally clay, silt or hardpan).	4″ larger in* diameter than the nominal diameter of well cas-ing pipe; or 2″ larger in diameter than the nominal diameter of the well casing pipe if steel pipe is assem-bled with welded joints and the annular space sealing material is placed using an approved pressure method	The upper enlarged drill-hole shall be kept filled up to within 10 feet of the ground sur-face with clay or bentonite slurry during driving of the well cas-ing pipe.	To the bottom of any non−caving layer or to the 20′ depth, which-ever is the lesser.	Same as above.	Circulated drilling mud to maintain the drillhole at full diameter.	To the top of firm bedrock, but not less than the cas-ing depth.	6″	Same as above.	Same as above.	Same as above.	6″, but not less than the inside diameter of the well casing pipe.	Same as above.

* An upper enlarged drillhole is not required when approved granular (8−mesh) bentonite is either mounded around the top of the well casing pipe during driving, or is placed in a starter drillhole during driving.

Continued on next page

Removed by Register March 2015 No. 711. For current adm. code see: http://docs.legis.wisconsin.gov/code/admin_code.

LINE	DEPTH TO FIRM BED-ROCK	NEAR SURFACE GEOLOGIC MATERI-ALS	UPPER ENLARGED DRILLHOLE REQUIREMENTS							WELL CASING PIPE REQUIREMENTS		ANNULAR SPACE SEAL-ING REQUIREMENTS		LOWER DRILLHOLE REQUIREMENTS (IN BEDROCK)	
			PERCUSSION METHODS			ROTARY METHODS									
			MINIMUM DIAMETER	METHOD OF KEEPING HOLE OPEN	MIN. DEPTH	MIN. DIAM.	METHOD OF KEEPING HOLE OPEN		MIN. DEPTH	MIN. DIAM.	MINIMUM DEPTH	PERCUS-SION METHODS	ROTARY METHODS	MIN. DIAM.	METHOD OF CUTTINGS REMOVAL
E.	Less than 40 feet; less than 30 feet for sandstone (except for condition in line F).	Material of any kind.	4″ larger in diameter than the nominal diameter of well casing pipe; or 2″ larger in diameter than the nominal diameter of the well casing pipe if steel pipe is assembled with welded joints and the annular space sealing material is placed using an approved pressure method	Temporary outer casing if the material above bedrock is caving; otherwise the drillhole shall be filled up to within10′ of the ground surface with clay slurry during driving of the well casing pipe.	40 feet, except for sandstone; 30 feet for sandstone.	Same as in Line C.	Caving formation above bedrock	Non−caving formation above bedrock.	To the depth of well casing pipe setting,but not less than 40′, 30 feet for sandstone.	6″	40′; 30 feet for sandstone (set in upper enlarged drillhole and driven to a firm seat).	Neat cement grout only, mixed & placed according to the requirements of NR 812.20.	Neat cement grout only, mixed and placed according to the requirements of NR 812.20.	6″ , but not less than the inside diameter of the well casing pipe.	Air or an approved foam, by bailing, or by circulated drilling mud.
							Circulated drilling mud	Air, an approved foam or drilling mud.							
F.	Less than 10 feet to Limestone (Dolomite)	Material of any kind.	Same as above.	Temporary outer casing if the material above the bedrock is caving.	60feet	Same as above.	Same as line E. above.		To the depth of well casing pipe setting, but not less than 60′.	6″	60′ (set in upper enlarged drillhole and driven to a firm seat).	Neat cement grout only, mixed & placed according to the requirements of NR 812.20.	Neat cement grout only, mixed & placed according to the requirements of NR 812.20.	6″ , but not less than the inside diameter of the well casing pipe.	Same as above.

Removed by Register March 2015 No. 711. For current adm. code see: http://docs.legis.wisconsin.gov/code/admin_code.

TABLE III.

DRILLED UNCONSOLIDATED FORMATION WELL CONSTRUCTION REQUIREMENTS FOR *POTABLE HIGH CAPACITY*, SCHOOL AND WASTEWATER TREATMENT PLANT WELLS

LINE	NEAR SURFACE GEOLOGIC MATERIALS	UPPER ENLARGED DRILLHOLE REQUIREMENTS						WELL CASING PIPE CASING REQUIREMENTS		ANNULAR SPACE SEALING REQUIREMENTS		SCREEN REQUIREMENTS (ONLY REQUIRED FOR WELLS THAT PUMP SAND)	
		PERCUSSION METHODS			ROTARY METHODS								
		MIN. DIAM.	METHOD OF KEEPING HOLE OPEN	MIN. DEPTH	MIN. DIAM.	METHOD OF KEEPING HOLE OPEN	MIN. DEPTH	MIN. DIAM.	MIN. DEPTH	PERCUS-SION METHODS	ROTARY METHODS	TYPE /MATERIAL	METHOD OF PLACE-MENT
G.	Caving material of any kind (usually sand)	3″ larger in diameter than the outside diameter of the well casing pipe or the outside diameter of the casing couplings (if used).	Temporary outer casing which shall be removed during or following grouting of the annular space. The drillhole shall be kept filled up to within 10 feet of the ground surface with clay or sodium bentonite slurry during the driving of the well casing pipe.	60′	3″ larger in diameter than the outside diameter of the well casing pipe or the outside diameter of the casing couplings (if used).	Circulated drilling mud to maintain drillhole at full diameter.	To the depth of well casing pipe setting.	4″	Whatever is greater:60′ depth; or 20′ below static water level; *and* such that the pump is set at least 5′ above the bottom of the casing pipe and does not break suction under normal operating conditions.	Neat cement grout *only*, placed by using an approved pressure method as specified by NR 812.20.	Neat cement grout *only*, placed by using an approved pressure method as specified by NR812.20.	Continuous slot, V−shaped wound−wire wrap on a rod base type./Of stainless steel, everdur, monel or brass.	Bail−down or Pull−back(telescoping) method. The screen may also be permanently attached to the bottom of the string of well casing pipe.
H.	Non−caving material of any kind in the top 60 feet (usually clay, silt or hardpan).	Same as above.	The drillhole shall be kept filled up to within 10 feet of the ground surface with clay or sodium bentonite slurry during the driving of the permanent well casing pipe. When temporary outer casing is used, it shall be pulled during or following grouting of the annular space.	60′	Same as above.	Same as above.	Same as above.	4″	Same as above.	Same as above.	Same as above.	Same as above.	Same as above.

Note: The 60−foot minimum requirement for the upper−enlarged drillhole depth and well casing pipe depth requirement shall be 100 feet rather than 60 feet (as in table above) whenever the well is installed for a wastewater treatment plant that has a lagoon or pond treatment system or sludge beds on the property.

Removed by Register March 2015 No. 711. For current adm. code see: http://docs.legis.wisconsin.gov/code/admin_code.

TABLE IV.

DRILLED *BEDROCK WELL* CONSTRUCTION REQUIREMENTS *FOR POTABLE HIGH CAPACITY*, SCHOOL AND WASTEWATER TREATMENT PLANT WELLS

			UPPER ENLARGED DRILLHOLE REQUIREMENTS						CASING PIPE REQUIREMENTS (STEEL ONLY)		WELL ANNULAR SPACE SEALING REQUIREMENTS		LOWER DRILLHOLE REQUIREMENTS (IN BEDROCK)	
			PERCUSSION METHODS			ROTARY METHODS			CASING PIPE		WELL		LOWER DRILLHOLE	
LINE	DEPTH TO FIRM BED-ROCK	NEAR SURFACE GEOLOGIC MATERIALS	MIN. DIAM.	METHOD OF KEEPING HOLE OPEN	MIN. DEPTH	MIN. DIAM.	METHOD OF KEEPING HOLE OPEN	MIN. DEPTH	MIN. DIAM.	MIN. DEPTH	PERCUSSION METHODS	ROTARY METHODS	MIN. DIAM.	METHOD OF CUTTINGS REMOVAL
I.	60 feet or more	Caving material of any kind (usually sand)	3″ larger in diameter than the outside diameter of the well casing pipe or the outside diameter of the casing couplings (if used.)	Temporary outer casing; which shall be removed during or following the grouting of the annular space. The drillhole shall be kept filled up to within 10 feet of the ground surface with clay or sodium bentonite slurry during driving of the well casing pipe.	60′	3″ larger in diameter than the outside diameter of the well casing pipe or the outside diameter of the casing couplings (if used).	Circulated drilling mud to maintain the drillhole at full diameter.	To the top of firm bedrock, but not less than the casing depth	6″	To a firm seat in bedrock.	Neat cement grout *only.* Placed by using an approved pressure method as specified in NR 812.20.	Neat cement grout *only.* Placed by using an approved pressure method as specified in NR 812.20.	6″	Air or an approved foam, by bailing,or by circulated drilling mud.
J.	60 feet or more	Non−caving material of any kind in the top 60 feet (usually clay, silt or hardpan).	Same as above.	The drillhole shall be kept filled up to within 10 feet of the ground surface with clay or sodium bentonite slurry during the driving of the well casing pipe.	60′	Same as above.	Same as above.	Same as above.	6″	To a firm seat in bedrock.	Same as above.	Same as above	6″	Same as above.
K.	Less than 60′	Caving material of any kind (usually sand).	Same as above.	Temporary outer casing through any unconsolidated material. It shall be removed during or following the grouting of the annular space.	60′	Same as above.	Circulated drilling mud through unconsolidated material; air or an approved foam in bedrock.	60′	6″	60′; set in the upper enlarged drillhole and driven to a firm seat.	Same as above.	Same as above.	6″	Same as above.
L.	Less than 60′	Non−caving material of any kind in the top 60 feet (usually clay, silt or hardpan).	Same as above.	The drillhole shall be kept filled up to within 10 feet of the ground surface with clay or sodium bentonite slurry during the driving of the well casing pipe.	60′	Same as above.	Circulated drilling mud, air, or an approved foam.	60′	6″	Same as above.	Same as above.	Same as above.	6″	Same as above.

NOTE: The 60−foot minimum requirement for the upper−enlarged drill hole depth and well casing pipe depth requirement shall be 100 feet rather than 60 feet (as in table above) whenever the well is installed for a wastewater treatment plant that has a lagoon or pond treatment system or sludge beds on the property.

(3) A greater depth of well casing pipe shall be provided in special well casing pipe depth areas designated by the department where well histories show contamination extends to a greater depth. In some of these areas department approval shall be obtained for each well prior to construction.

Note: A list of special well casing pipe depth areas and the required depths may be obtained from the department upon request. Greater depth of well casing pipe is recommended for wells constructed on high density tiered lots where possible contamination sources exist on neighboring up−slope lots. Additional requirements for more stringent well construction methods are found in sub. (15), regarding sites listed on the GIS Registry (formerly known as the GIS Registry of Closed Remediation Sites).

(4) Steel well casing pipe shall meet the requirements of s. NR 812.17. Steel well casing pipe assembled with welded joints shall have beveled ends and all joints shall be welded according to the welding requirements outlined in s. NR 812.18.

(5) A drive−shoe shall be welded or threaded to the bottom of any string of well casing pipe to be driven including driving to a firm seat in bedrock when well casing pipe is set in an upper enlarged drillhole, except when the upper enlarged drillhole extends 20 feet or more into bedrock and the annular space is cement grouted before the lower drillhole is constructed, the use of a drive−shoe is optional. A drive−shoe is not required for any temporary outer casing. Thermoplastic well casing pipe may not be driven.

(6) The well driller or well constructor shall complete the well construction such that the well casing pipe extends at least 12 inches above the final ground grade, above a pumphouse or building floor or above any concrete or asphalt platform installed at or above the established ground surface. In addition, for wells in floodplains, the top of the well casing pipe shall terminate at least 2 feet above the regional flood elevation. A well may not be constructed in a floodway on property that is either undeveloped or on property that has buildings but no existing potable well.

(7) Well plumbness and alignment shall conform to the requirements of s. NR 812.19.

(8) Liners shall meet the requirements of s. NR 812.21.

(9) Grouting and sealing requirements shall conform to s. NR 812.20.

(10) The construction of flowing wells shall also comply with the construction requirements of s. NR 812.15.

(10m) Drilling fluid must be less dense than the grout to facilitate proper sealing of heat exchange drillholes.

(11) Water used in the construction, reconstruction or redevelopment of wells shall be clear water obtained from an uncontaminated source. The water shall be disinfected with chlorine with a residual of 100 mg/l (parts per million) to reduce the effort involved in the final disinfection of the well and to reduce the possibility of groundwater contamination. The chlorine concentration may be mixed according to Table B in s. NR 812.22 (4) (d). The drilling fluid shall be maintained with a free−chlorine residual of 10 mg/l (parts per million) during drilling.

(12) Well construction shall be interrupted for at least 12 hours following placement of cement grout in the annular space between the well casing pipe and the upper enlarged drillhole or between a liner pipe and a lower drillhole and the well casing pipe.

(13) Nonpotable wells shall be constructed according to the requirements for low capacity potable wells, except that well casing pipe 12 inches in diameter and larger used for nonpotable wells may have a lesser wall thickness than is required by Table V for the diameter of the well casing pipe used provided the pipe has a minimum wall thickness of 0.250 inches and is adequate in strength to make the well structurally sound. The drilling mud requirements during well drilling and the sodium bentonite annular space sealing requirements do not apply to nonpotable high capacity wells constructed with reverse rotary methods.

(14) Starter drillholes 10 feet deep or less are not upper enlarged drillholes. Starter drillholes need not meet the minimum requirements for upper enlarged drillholes.

(15) More stringent well construction methods including but not limited to deeper well casing pipe depth settings are required by the department for wells constructed through formations where contaminant levels exceed the drinking water standards in s. NR 812.06, and may be required when there is groundwater contamination exceeding ch. NR 140 enforcement standards on a property that is listed on the department's geographic information system registry of closed remediation sites. When drilling in areas where there are contaminated formations, and on properties where the water well or heat exchange driller or well constructor has been notified that the property is listed on the department's geographic information system registry of closed remediation sites, consultation with the department is required. If required by the department, special well and drillhole construction methods shall be utilized when constructing or reconstructing wells or drillholes located on properties that are listed on the department's geographic information system registry of closed remediation sites.

Note: The GIS Registry of Closed Remediation Sites has been renamed the GIS Registry. It is now a layer on the map view, RR Sites Map. Information about a specific site can be found int he tracking system, BRRTS on the Web. Both these applications can be found at http://dnr.wi.gov/topic/Brownfields/clean.html. Information on a specific site can also be obtained by calling the nearest regional DNR office.

(16) When a quarry is within 500 feet of any proposed water well, the upper enlarged drillhole and well casing pipe depth requirements shall be referenced from the bottom of the quarry and an additional 20 feet of upper enlarged drillhole, well casing pipe and cement grout shall be installed over the amount required in Table II and Table III. When the bottom of the quarry is or will be at an elevation higher than the elevation of the ground surface at the well site, this requirement does not apply. This requirement does not apply if the quarry is no longer used and is permanently filled with water.

(17) When a sinkhole or an outcrop is within 250 feet of any proposed well, additional depth of the upper enlarged drillhole and well casing pipe may be necessary. Consultation by the well driller or well owner with the department is recommended.

(18) Drill cutting samples from high capacity, school and wastewater treatment plant wells shall be collected at 5−foot depth intervals and at each change in geological formation. The samples shall be submitted to the Wisconsin geological and natural history survey for preparation of a certified log of the well.

(19) When percussion drilling methods are used to construct a well as specified in s. NR 812.13 (2) or 812.14 (2), rotary air methods may be used to construct an upper enlarged drillhole in noncaving formations to a depth not to exceed 20 feet, or may be used to construct a drillhole to facilitate the driving of temporary outer casing providing the drillhole is the same or smaller diameter as the outside diameter of the temporary outer casing and does not extend deeper than the 40−foot depth.

(20) When percussion drilling methods are to be used to construct a well as specified in s. NR 812.13 (2) or 812.14 (2), rotary−mud circulation techniques may be used to construct an upper enlarged drillhole below which the well casing pipe may be driven providing:

(a) The drillhole is at least 2 inches larger in diameter than the nominal well casing pipe diameter,

(b) The well casing pipe is assembled with welded joints, and

(c) The drillhole is kept full of drilling mud and cuttings while the well casing pipe is driven.

(21) When using percussion methods for the construction of nonpotable high capacity wells and for low capacity wells except school and wastewater treatment plant wells, the minimum diameter of the upper enlarged drillhole may be reduced from 4 inches larger in diameter than the nominal diameter of the well casing pipe to 2 inches larger in diameter than the nominal diameter of the well casing pipe when:

(a) Steel well casing pipe assembled with welded joints is used, and

Removed by Register March 2015 No. 711. For current adm. code see: http://docs.legis.wisconsin.gov/code/admin_code.

(b) The annular space sealing material is placed by using an approved pressure method.

History: Cr. Register, January, 1991, No. 421, eff. 2−1−91; am. (1) (c), (3), (13), (15), (16), Tables I and II, cr. (1) (e), Register, September, 1994, No. 465, eff. 10−1−94; CR 00−111: am. (15), Register October 2001 No. 550, eff. 11−1−01; **CR 13−096: am. (title), (1), cr. (10m), am. (15), CR 13−099: cr. (2) (e), am. (16) Register September 2014 No. 705, eff. 10−1−14; correction in numbering in (10m) made under s. 13.92 (4) (b) 1., Stats., correction in (15) made under s. 35.17, Stats., Register September 2014 No. 705.**

NR 812.13 Drilled wells terminating in unconsolidated formations, i.e., usually sand or gravel or both. Unconsolidated formation wells shall be constructed according to the requirements in s. NR 812.12 and as follows:

(1) GENERAL REQUIREMENTS. (a) The minimum diameter for all drilled wells in unconsolidated formations, based on nominal size of well casing pipe is:

1. For nonpotable high capacity wells and for low capacity wells, except school and wastewater treatment plant wells, a minimum diameter of: 2 inches when steel well casing pipe is used, 4 inches when thermoplastic well casing pipe is used.

2. For potable high capacity, school and for wastewater treatment plant wells a minimum diameter of 4 inches.

(b) The minimum well casing pipe depth for all drilled wells in unconsolidated formations, not including any screen, is:

1. For nonpotable high capacity wells and for low capacity wells, except school and wastewater treatment plant wells, a minimum depth of 25 feet or 10 feet below the static water level, whichever is greater.

2. For potable high capacity and school wells, and for wastewater treatment plant wells when there is no treatment pond or lagoon or sludge bed on the wastewater treatment plant property, a minimum depth of 60 feet below the ground surface or 20 below the static water level, whichever is greater.

3. For wastewater treatment plant wells when there is a treatment pond or lagoon or sludge bed on the wastewater treatment plant property, a minimum depth of 100 feet below the ground surface or 20 feet below the static water level, whichever is greater.

(c) The pump intake shall be set at least 5 feet above the bottom of the well casing pipe and shall be set such that the pump does not break suction under normal operating conditions.

Note: The department may grant variances to the 5 foot requirement in low permeability, low yielding formations.

(d) Steel and thermoplastic well casing pipe, as specified in s. NR 812.17, may be used for low capacity wells and for nonpotable high capacity wells, but not including school and wastewater treatment plant wells. Only steel well casing pipe may be used for potable high capacity, school and wastewater treatment plant wells.

(e) 1. An adequate screen shall be provided where necessary to prevent sand pumping conditions. The required types and materials for screens are:

a. For potable low capacity wells, a continuous−slot screen composed of stainless steel, everdur, monel, brass or approved polyvinyl chloride (PVC). Noncontinuous−slot screens may be used if approved.

aj. Criteria on which noncontinuous−slot screen approvals are based includes, but is not limited to, type and composition of screen material, spacing and evenness of cuts of screen slots and cleanliness of the screen and screen slots.

ap. Screen selection for driven−point wells is optional, except that screens having any lead content may not be used.

Note: Louvered, shutter−type screens may be used for gravel−pack well construction as specified in s. NR 812.16 (3).

b. For nonpotable high capacity wells, not including dewatering wells, a continuous−slot screen meeting the requirements of subd. 1. a. or a low carbon steel or galvanized−steel, continuous−slot screen.

c. For potable high capacity wells, a continuous−slot screen, v−shaped, wire−wrap on a rod base type; composed of stainless steel, everdur, monel or brass. The brass may not have a lead content of more than 8%.

d. For nonpotable low capacity wells and dewatering wells, screens are not required; if used, screen selection is optional, except that screens having any lead content may not be used.

Note: The department will review applications for approval of new types of screens and new materials for screens as such products are developed.

2. Screen installation may be accomplished by permanently welding or threading the screen onto the bottom of the well casing pipe, by placement of the screen in the bottom of the well casing pipe and pulling back the casing (telescope method), by the wash−down method, the jetting method or the bail−down method. A small diameter drill stem, rod or bit or a small diameter pipe column may be used to hold the screen down with the telescope method.

3. A riser pipe may be installed to extend upward from the top of the screen. The riser pipe material may be thermoplastic or metal providing the metal does not have a lead content in excess of 8%.

4. A packer shall be used to provide a sand seal between the bottom of a well casing pipe and the top of a screen. Lead packers may not be used. Packers used to retain grout or reduce water flow shall be made of durable, nontoxic material. Burlap packers may not be used.

5. Materials having a lead content greater than 8% by weight, may not be installed in a well. Component parts of manufactured products containing lead shall not have a lead content of more than 5% of the total product weight. "Lead wool" or other products containing more than 8% lead may not be used as seals in the bottom of open−ended well casing pipes or as screens terminating in coarse formations.

(f) Gravel−pack well construction shall comply with the additional requirements of s. NR 812.16.

(g) Wells constructed by auguring or jetting methods shall be constructed according to the requirements for percussion methods of sub. (2).

(2) PERCUSSION METHOD REQUIREMENTS FOR DRILLED WELLS IN UNCONSOLIDATED FORMATIONS. (a) When steel well casing pipe is installed in a drilled unconsolidated formation well using percussion methods, the well shall be drilled as follows:

1. An upper enlarged drillhole constructed by percussion methods shall be constructed to the minimum depth required in Tables I−IV. The well casing pipe may be driven from the surface without the use of an upper enlarged drillhole when there is a caving formation at the surface extending to 10 feet or deeper or when granular bentonite of the 8−mesh size is either mounded around the top of the well casing pipe or placed in a starter drillhole and allowed to follow the well casing pipe down during driving. If granular bentonite is not used, an upper enlarged drillhole shall be constructed when a noncaving material, usually clay, silt or hardpan, is encountered in the top 10 feet. Rotary−air methods as specified in s. NR 812.12 (19) may be used to construct the upper enlarged drillhole. It shall be at least 4−inches larger in diameter than the nominal diameter of the well casing pipe for nonpotable high capacity wells and for low capacity wells, except school and wastewater treatment plant wells. When steel well casing pipe assembled with welded joints is used and the annular space sealing material is placed with an approved pressure method, the diameter may be reduced to 2 inches larger than the nominal well casing pipe diameter. The upper enlarged drillhole shall be 3 inches larger in diameter than the outside diameter of the permanent well casing pipe or casing couplings for potable high capacity, school and wastewater treatment plant wells. When the near surface material is of a caving nature, the upper enlarged drillhole shall be constructed by driving, while drilling, a temporary outer casing. The upper enlarged drillhole shall be kept filled up to within 10 feet of the ground surface with clay slurry or sodium bentonite slurry having a mud weight of at least 11 pounds per gal-

Removed by Register March 2015 No. 711. For current adm. code see: http://docs.legis.wisconsin.gov/code/admin_code.

lon or with granular bentonite throughout the driving of the permanent steel well casing pipe. If the upper enlarged drillhole extends below the 40−foot depth, the slurry shall be placed with a conductor pipe. If any of the annular space seal settles during development of the well, it shall be replaced following development.

2. Following driving of the well casing pipe any upper enlarged drillhole shall be filled with clay or sodium bentonite slurry having a mud weight of a least 11 pounds per gallon or with neat cement grout, except only neat cement grout may be used for potable high capacity, school or wastewater treatment plant wells. Neat cement grout shall be placed according to s. NR 812.20. If the upper enlarged drillhole extends below the 40−foot depth and the annular space sealing material is clay or sodium bentonite slurry, the sealing material shall be placed with a conductor pipe. When temporary outer casing pipe is used, it shall be removed during or following the sealing process. If the upper enlarged drillhole extends below the 100−foot depth, the annular space sealing material shall be placed with an approved pressure method as specified in s. NR 812.20. If any of the annular space seal settles during or following development of the well, it shall be replaced.

3. When using a rotary machine with hammer or a casing hammer for percussion methods, the drill cuttings inside and just below the well casing pipe may be removed with a rotary bit with the use of air.

(b) Thermoplastic well casing pipe may be used when percussion methods are used to drill wells in unconsolidated formations under the following conditions:

1. Thermoplastic well casing pipe may only be used for nonpotable high capacity wells and for low capacity wells, developed in unconsolidated formations and constructed in accordance with line A or B of Table I but not including school or wastewater treatment plant wells.

2. Thermoplastic well casing pipe may only be used for wells where the annular space is sealed with sodium bentonite or clay slurry. Cement grout may not be used. The thermoplastic well casing pipe shall be set in an upper enlarged drillhole constructed within a temporary outer steel well casing at least 4 inches larger in diameter than the nominal diameter of the permanent well casing pipe. The temporary outer casing and upper enlarged drillhole shall extend to the full depth of the well casing pipe if constructed with percussion methods. The temporary outer casing pipe shall be removed after setting the well casing pipe. During removal, the annular space shall be filled with clay or sodium bentonite and cuttings slurry with a mud weight of at least 11 pounds per gallon. The bottom of the temporary outer casing shall remain submerged in the slurry throughout the removal. If the upper enlarged drillhole extends below the 40−foot depth, the slurry shall be placed with a conductor pipe. If any of the annular space seal settles during development of the well, it shall be replaced following development.

3. The well casing pipe may not be driven, pushed or forced into the formation or into the upper enlarged drillhole, but the well casing pipe may be pulled back to expose a screen.

4. Drilling tools such as drill bits or stabilizers may not be placed in the well casing pipe nor may any drilling or reconstruction occur after placement of the well casing pipe in the well. This restriction does not preclude the installation or replacement of telescoping screens.

5. Screens may be installed as specified in s. NR 812.13 (1) (e) 2. If a screen is not permanently attached, an approved packer shall be used to seal the space between the screen and the well casing pipe. A small diameter drill stem, bit or rod or a small diameter pipe column bearing on the screen bottom plate may be used to hold the screen down with the telescope method.

6. If the thermoplastic well casing pipe extends above the frost line, the upper terminus of the well shall be contained in a well house or in a capped oversized steel well casing pipe. The pipe shall extend from the top of the thermoplastic well casing pipe to a depth below the frost level.

(3) ROTARY METHOD REQUIREMENTS FOR DRILLED WELLS IN UNCONSOLIDATED FORMATIONS. (a) When steel well casing pipe is installed in a drilled unconsolidated formation well using rotary methods, the well shall be drilled as follows:

1. An upper enlarged drillhole shall be constructed and maintained at full diameter by circulating drilling mud to the required depth of well casing pipe setting, as specified by Tables I to IV. The well casing pipe shall be set concentrically in the upper enlarged drillhole. The annular space between the upper enlarged drillhole and the permanent well casing pipe shall be permanently sealed with sodium bentonite and cuttings slurry having a mud weight of at least 11 pounds per gallon or with neat cement grout, except that only neat cement grout may be used for potable high capacity, school and wastewater treatment plant wells. If any of the annular space seal settles during or following development of the well, it shall be replaced so as to seal the entire annular space.

2. The upper enlarged drillhole may be constructed less than 4 inches larger in diameter than the nominal diameter of the well casing pipe, but shall be at least 2 inches larger in diameter than the nominal diameter of the well casing pipe only if the following conditions are met:

a. The well is to be a nonpotable high capacity well or is to be a low capacity well, except a school or wastewater treatment plant well,

b. The required sealing material, according to Tables I to IV, is placed in the annular space between the upper enlarged drillhole and the well casing pipe using an approved pressure method according to the requirements of s. NR 812.20, and

c. The well casing pipe is assembled entirely with welded joints.

3. For potable high capacity, school and wastewater treatment plant wells, an upper enlarged drillhole at least 3 inches larger in diameter than the outside diameter of the permanent well casing pipe or the outside diameter of the well casing couplings, if used, shall be constructed and maintained at full diameter by circulated drilling mud to the depth as required by Tables III and IV. The annular space shall be sealed with neat cement grout according to the requirements of s. NR 812.20.

4. Temporary outer casing may be used to hold the upper enlarged drillhole open only if it is removed during the final sealing of the annular space. An upper enlarged drillhole may be constructed to accommodate the setting and removal of the temporary outer casing if the drillhole is constructed and maintained at full diameter by circulating drilling mud and is at least 2 inches larger in diameter than the nominal diameter of the temporary outer casing assembled with welded joints.

5. If necessary the well casing pipe may be driven deeper so as to develop a deeper portion of the aquifer. The annular space of the well shall be completely filled with drilling mud and cuttings during such driving. This method may also be used for any reason when the upper enlarged drillhole is constructed to at least the 40−foot depth.

(b) Thermoplastic well casing pipe may be used when rotary methods are used to drill wells in unconsolidated formations under the following conditions:

1. Thermoplastic well casing pipe may only be used for nonpotable high capacity wells and for low capacity wells, except school and wastewater treatment plant wells.

2. Thermoplastic well casing pipe may only be used for wells developed in unconsolidated formations and constructed in accordance with line A or B of Table I.

3. Thermoplastic well casing pipe may not be driven, pushed or forced into the formation or into the upper enlarged drillhole

Removed by Register March 2015 No. 711. For current adm. code see: http://docs.legis.wisconsin.gov/code/admin_code.

except that the well casing pipe may be pulled back to expose a screen.

4. An upper enlarged drillhole at least 4 inches larger in diameter than the nominal diameter of the thermoplastic well casing pipe shall be constructed and maintained at full diameter by circulating drilling mud to the required depth of well casing pipe settings, as specified in Tables I to IV. The thermoplastic well casing pipe shall be set concentrically in the upper enlarged drillhole full of drilling mud. The drilling mud shall have a mud weight of at least 11 pounds per gallon. If any of the annular space seal settles during or following development of the well, it shall be replaced so as to seal the entire annular space.

5. Drilling tools such as drill bits or stabilizers may not be placed in the thermoplastic well casing pipe nor may any drilling or reconstruction occur after placement of the well casing pipe in the well. This restriction does not preclude the installation or replacement of screens.

6. Screens may be installed as specified in s. NR 812.13 (1) (e) 2. If a screen is not permanently attached, an approved packer shall be used to seal the space between the screen and the thermoplastic well casing pipe. A small diameter drill stem or rod or small diameter pipe column bearing on the screen bottom plate may be used to place the screen with the telescope method.

7. If the thermoplastic well casing pipe extends to above the ground surface, the upper terminus of the well may be contained in a well house or in a capped oversized steel casing pipe which extends from the top of the thermoplastic well casing pipe to a depth below the frost level.

History: Cr. Register, January, 1991, No. 421, eff. 2−1−91; am. (2) (a) 2., (b) 1., (3) (a) 1. and (b) 4., Register, September, 1994, No. 465, eff. 10−1−94; correction in (2) (e) 1., made under s. 13.93 (2m) (b) 1., Stats., Register, September, 1996, No. 489 **CR 13−099: am. (3) (b) 7., Register September 2014 No. 705, eff. 10−1−1.**

NR 812.14 Drilled wells in bedrock formations. Bedrock wells shall be constructed according to the requirements of s. NR 812.12 and as follows:

(1) GENERAL REQUIREMENTS FOR DRILLED WELLS TERMINATING IN BEDROCK FORMATIONS. (a) Steel well casing pipe meeting the requirements of s. NR 812.17 shall be used for bedrock wells. Thermoplastic well casing pipe may not be used for bedrock wells.

(b) The minimum diameter for bedrock wells is 6 inches.

(c) The minimum diameter for the upper enlarged drillhole for potable high capacity, school and wastewater treatment plant wells is 3 inches larger in diameter than the outside diameter of the well casing pipe or the outside diameter of the well casing pipe couplings, if used.

(d) The minimum depth for the upper enlarged drillhole and the well casing pipe is as specified in Tables I to IV.

(e) The well casing pipe shall be driven to a firm seat in the bedrock with a drive−shoe except when the upper enlarged drillhole extends 20 feet or more into the bedrock and the annular space is grouted before the lower drillhole is constructed, the use of a drive−shoe is optional.

(f) When well casing pipe is set in an upper enlarged drillhole extending 20 or more feet into bedrock, the well casing pipe shall be centered in the drillhole by one of the following methods:

1. A set of at least 3 centering guides shall be provided at every pipe joint within the bedrock to ensure an even annular space around the well casing pipe. A minimum of 2 sets shall be provided, one near the top of the bedrock and one at the bottom of the string of well casing pipe. This is depicted in figure 1, or

2. A drive−shoe may be welded or threaded onto the bottom of the string of well casing pipe and, if the well casing pipe extends more than 63 feet (that is, more than 3 standard pipe lengths) into the bedrock, at least one set of 3 centering guides shall be provided on the casing pipe within the bedrock. If only one set of guides is provided, it shall be installed within 5 feet of the top of the bedrock.

(g) Development of wells in shale formations is allowed by the department only when the shale is known to be firm enough so that the drillhole will stand open and the water pumped from the well is not turbid.

(h) When nonpotable high capacity wells and low capacity wells, except school and wastewater treatment plant wells, are completed in igneous or metamorphic crystalline bedrock, normally referred to as "granite" wells, an initial attempt shall be made to obtain water below the 40−foot depth. The drillhole shall extend to a depth of at least 150 feet, even though water in sufficient quantity may be encountered during drilling in the bedrock above the 40−foot depth. When adequate water quantity is not obtained below the 40−foot depth, the department may approve installation of less than 40 feet of well casing pipe for withdrawal of water from the bedrock above the 40−foot depth. Prior approval is required. Installation of less than 20 feet of grouted well casing pipe will not be approved without continuous chlorination. Installation of less than 25 feet of well casing pipe will not be approved unless the well casing pipe is permanently cement grouted all the way up to the ground surface.

Note: For the installation of pumps in wells with less than 25 feet of well casing pipe, see the requirement in s. NR 812.31 (2) (d).

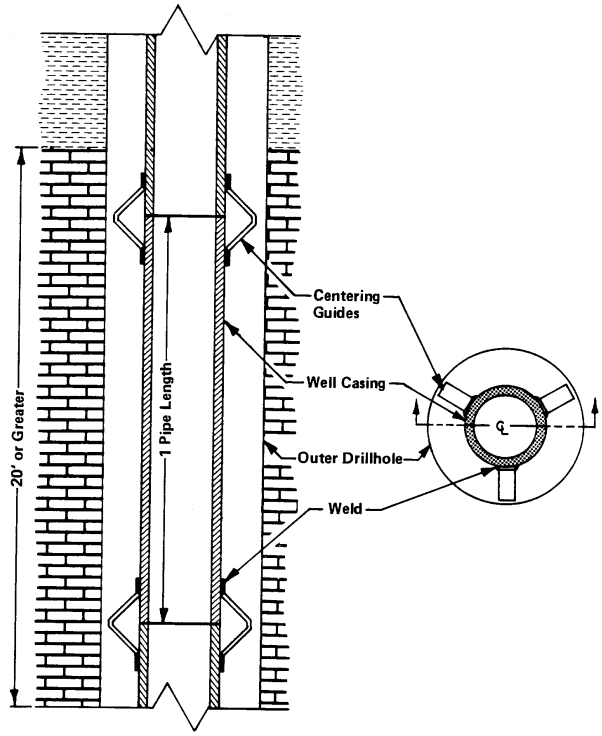

Note: From State of Oregon Well Code

Figure 1. Minimum requirements for centering guides in bedrock wells.

(i) Wells may not be constructed open to both an unconsolidated formation and a bedrock formation without approval.

(j) Wells constructed or reconstructed to withdraw water from any of the aquifers beneath the "Maquoketa" shale and the "Niagara" formations in the eastern part of the state shall be cased and grouted at least through the "Niagara" formation except in areas designated by the department as special well casing pipe depth areas. The department recommends that such wells also be cased and grouted through the "Maquoketa" shale formation. If a liner is used to case off the "Niagara" formation, the "Maquoketa" shale formation or both, it shall be installed in a manner conforming with the requirements of s. NR 812.21 (1).

Removed by Register March 2015 No. 711. For current adm. code see: http://docs.legis.wisconsin.gov/code/admin_code.

(k) Screens, installed with or without gravel−packs, may be installed in loosely cemented sandstone wells. The requirements for screen materials and installation of the screen in s. NR 812.13 (1) (e) and the requirements for gravel−packs in s. NR 812.16 apply to drilled wells in bedrock formations.

(L) An open bedrock drillhole may be underreamed to increase the size of a drillhole for gravel packing a screen in sandstone, setting a liner in a sloughing or contaminated formation or reducing the inflow velocity of water to a well. The underreaming may not commence closer than 5 feet below the bottom of the permanent well casing pipe unless the pipe is cement grouted in place to the depth required by Tables II & IV, in which case underreaming may commence directly below the bottom of the well casing pipe.

(m) Wells constructed with "hung" well casing pipe, i.e., well casing pipe, with a packer or grout flange installed on the bottom, suspended in an enlarged drillhole and grouted in place, require approval.

(2) PERCUSSION METHOD REQUIREMENTS FOR DRILLED BEDROCK WELLS. The percussion method is a drilling method using a cable−tool drilling machine or a drilling method whereby the well casing pipe is driven or is set in an upper enlarged drillhole and then driven; soil or rock material inside or just below, but not more than one well casing pipe length below, is broken up or crushed with a drill bit; and the drill cuttings are removed from inside or just below the well casing pipe. This method may be performed with a cable−tool machine, a rotary machine with hammer or with a casing hammer. When using a rotary drilling machine with hammer or casing hammer for the percussion method, the drill cuttings inside and just below the well casing pipe may be removed with a rotary bit with the use of air or an approved drilling fluid aid.

(a) For nonpotable high capacity wells and for low capacity wells constructed by percussion methods in bedrock, except school and wastewater treatment plant wells:

1. When the depth to bedrock is at least 40 feet:

a. The well casing pipe may be driven, while drilling, from the ground surface to a firm seat in the top of bedrock without the use of an upper enlarged drillhole when the near surface unconsolidated material is of a caving nature, usually sand, to a depth of at least 10 feet or when granular bentonite of the 8−mesh size is either mounded around the top of the well casing pipe or placed in a starter drillhole and allowed to follow the well casing pipe down during driving. Any starter drillhole 10 feet deep or less is not an upper enlarged drillhole. Starter drillholes need not meet the minimum requirements for upper enlarged drillholes.

b. An upper enlarged drillhole at least 4 inches larger in diameter than the nominal diameter of the well casing pipe shall be constructed to at least the bottom of any non−caving layer or to the 20−foot depth whichever is the lesser when the near surface unconsolidated material to a depth of 10 feet is noncaving, usually clay, silt or hardpan. When steel well casing pipe assembled with welded joints is used and the annular space sealing material is placed with an approved pressure method, the diameter may be reduced to 2 inches larger than the nominal well casing pipe diameter. Rotary−air methods as specified in s. NR 812.12 (19) may be used.

c. When an upper enlarged drillhole is constructed it shall be kept filled up to within 10 feet of the ground surface with clay or sodium bentonite slurry with a mud weight of at least 11 pounds per gallon or with 8−mesh granular bentonite throughout the driving of the permanent well casing pipe. The pipe shall be driven to a firm seat in the bedrock.

d. When an upper enlarged drillhole is constructed, following completion of the driving of the well casing pipe, the annular space shall be filled with clay or sodium bentonite slurry having a mud weight of at least 11 pounds per gallon or with neat cement grout except that only neat cement grout may be used when the upper enlarged drillhole is constructed more than 5 feet into bedrock. Neat cement grout shall be placed according to the requirements of s. NR 812.20. When temporary outer casing is used, it shall be removed during or immediately after sealing the annular space. When the upper enlarged drillhole extends deeper than the 40−foot depth and the annular space sealing material is clay or sodium bentonite slurry, the slurry shall be placed with a conductor pipe. When the upper enlarged drillhole extends deeper than the 100−foot depth, the annular space sealing material shall be pumped.

2. When the depth to bedrock is less than 40 feet or less than 30 feet for sandstone:

a. An upper enlarged drillhole shall be constructed to at least the 40−foot depth except when limestone or dolomite is encountered at a depth less than 10 feet from the ground surface, in which case the upper enlarged drillhole shall be constructed to at least the 60−foot depth or except when the bedrock is sandstone, in which case the upper enlarged drillhole shall be constructed to at least the 30−foot depth. When a caving unconsolidated formation is encountered, the upper enlarged drillhole shall be constructed by driving, while drilling, a temporary outer casing. The upper enlarged drillhole may be constructed only 2 inches larger in diameter than the nominal diameter of the permanent well casing pipe if the pipe is assembled with welded joints and if neat cement grout is placed into the annular space using an approved pressure method as specified in s. NR 812.20. Otherwise the upper enlarged drillhole shall be constructed at least 4 inches larger in diameter than the nominal diameter of the well casing pipe,

b. The well casing pipe shall be set concentrically within the upper enlarged drillhole and driven to a firm seat in the bedrock, and

c. The annular space shall be sealed with neat cement grout according to the requirements of s. NR 812.20. When temporary outer casing is used, it shall be removed during or after grouting. When the upper enlarged drillhole extends deeper than the 100−foot depth, the grout shall be placed with an approved pressure method.

(b) For potable high capacity, school and wastewater treatment plant wells constructed by percussion methods in bedrock:

1. When the depth to bedrock is at least 60 feet:

a. An upper enlarged drillhole at least 3 inches larger in diameter than the outside diameter of the well casing pipe or casing couplings, if used, shall be constructed to at least the 60−foot depth, or to at least the 100−foot depth if the well is for a wastewater treatment plant and there is a treatment pond or lagoon or sludge beds on the property. When an unconsolidated caving formation is encountered, the upper enlarged drillhole shall be constructed by driving, while drilling, a temporary outer casing,

b. The upper enlarged drillhole shall be kept filled up to within 10 feet of the ground surface with clay or sodium bentonite slurry with a mud weight of at least 11 pounds per gallon or with granular bentonite throughout the driving of the permanent well casing pipe. The well casing pipe shall be driven to a firm seat in the top of bedrock, and

c. The annular space shall be sealed with neat cement grout according to the requirements of s. NR 812.20. An attempt shall be made to remove the temporary outer casing during or following grouting. It shall be removed if possible. When the upper enlarged drillhole extends deeper than the 100−foot depth, the grout shall be placed with an approved pressure method.

2. When the depth to bedrock is less than 60 feet:

a. An upper enlarged drillhole at least 3 inches larger in diameter than the outside diameter of the well casing pipe or casing couplings, if used, shall be constructed to least the 60−foot depth, or at least to the 100−foot depth if the well is for a wastewater treatment plant and there is a treatment pond or lagoon or sludge beds on the property. When an unconsolidated caving formation is

Removed by Register March 2015 No. 711. For current adm. code see: http://docs.legis.wisconsin.gov/code/admin_code.

encountered, the upper enlarged drillhole shall be constructed by driving, while drilling, a temporary outer casing,

b. The well casing pipe shall be set concentrically within the upper enlarged drillhole and driven to a firm seat in the bedrock, and

c. The annular space shall be sealed with neat cement grout according to the requirements of s. NR 812.20. Temporary outer casing shall be removed during or after grouting. When the upper enlarged drillhole extends deeper than the 100−foot depth, the grout shall be placed with an approved pressure method.

(3) ROTARY METHOD REQUIREMENTS FOR DRILLED BEDROCK WELLS. The rotary method for bedrock wells shall be a method whereby an upper enlarged drillhole is constructed to the intended depth of well casing pipe by using a circular rotating action applied to a string of hollow drilling rods having a drill bit attached to the bottom. The well casing pipe is set to the bottom of the drillhole and is not driven, except to drive to a firm seat in the top of bedrock.

(a) The upper enlarged drillhole constructed through the unconsolidated material above the bedrock shall be maintained at full diameter with drilling mud circulated with a suitable pump or with temporary outer casing. When temporary outer casing pipe is used, it shall be removed after the sealing process. An upper enlarged drillhole may be constructed to accommodate the setting and removal of temporary outer casing pipe if the drillhole is at least 2 inches larger in diameter than the nominal diameter of the temporary outer casing and is maintained at full diameter by circulating drilling mud. This is depicted in figure 2. Air or an approved foam may be used for constructing the upper enlarged drillhole if:

1. Bedrock is encountered above the 40−foot depth, 30−foot depth for sandstone, for nonpotable high capacity wells or for low capacity wells, except for school and wastewater treatment plant wells, or if bedrock is encountered above the 60−foot depth for potable high capacity, school or wastewater treatment plant wells, and

2. The unconsolidated material above the bedrock is clay, hardpan, or a similar material that will allow a drillhole to stand open.

3. If an approved foam is used, the foam concentration may not exceed one quart per 100 gallons of water, without approval.

(b) For nonpotable high capacity wells and low capacity wells constructed by rotary methods in bedrock, except school and wastewater treatment plant wells:

1. An upper enlarged drillhole at least 2 inches larger in diameter than the nominal diameter of the well casing pipe, shall be constructed according to par. (a) to a minimum depth as follows:

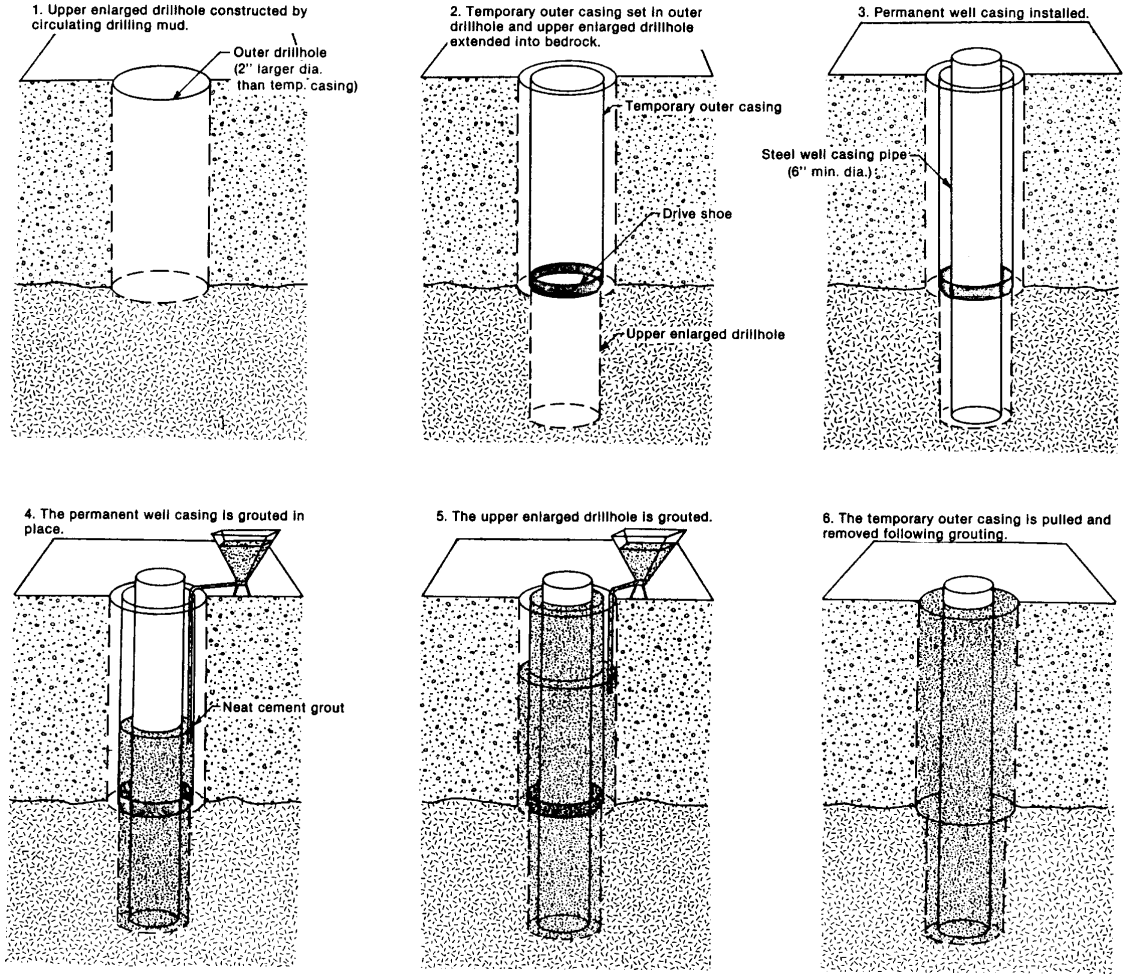

Figure 2. Required rotary method for constructing and sealing upper enlarged drillholes to enable the setting and removal of a temporary outer casing in bedrock wells overlain by unconsolidated caving material.

a. To the top of firm bedrock when the depth to firm bedrock is 40 feet or more, 30 feet or more for sandstone;

b. To the depth of the well casing pipe setting, but not less than 40 feet, 30 feet for sandstone, when the depth to bedrock is less than 40 feet, less than 30 feet for sandstone; or

Removed by Register March 2015 No. 711. For current adm. code see: http://docs.legis.wisconsin.gov/code/admin_code.

c. To the depth of well casing pipe setting, but not less than 60 feet when the depth to firm limestone or dolomite is less than 10 feet below the ground surface.

2. The steel well casing pipe shall be set to the bottom of the upper enlarged drillhole and driven to a firm seat in the bedrock.

3. The annular space between the upper enlarged drillhole and the well casing pipe may be sealed with drilling mud and cuttings having a mud weight of at least 11 pounds per gallon or with neat cement grout, according to the requirements of s. NR 812.20, except that only neat cement grout shall be used whenever the top of bedrock is encountered above the 40−foot depth, above the 30−foot depth for sandstone, or whenever the upper enlarged drillhole extends more than 5 feet into the top of the bedrock formation.

4. When the diameter of the upper enlarged drillhole is less than 4 inches larger in diameter than the nominal diameter of the well casing pipe, the well casing pipe shall be assembled with welded joints and the sealing material shall be placed using an approved pressure method as specified in s. NR 812.20 (2) (j).

(c) For potable high capacity, school and wastewater treatment plant wells constructed by rotary methods in bedrock:

1. An upper enlarged drillhole at least 3 inches larger in diameter than the outside diameter of the well casing pipe or the outside diameter of the well casing pipe couplings, if used, shall be constructed according to par. (a) to a minimum depth of:

a. 60 feet or to the depth of bedrock if the top of bedrock is more than 60 feet below the ground surface; or

b. 100 feet if the well is to supply water for a wastewater treatment plant and there is a treatment pond or lagoon on sludge beds on the property.

2. The well casing pipe shall be set to the bottom of the upper enlarged drillhole and driven to a firm seat in the bedrock.

3. The annular space between the upper enlarged drillhole and the permanent well casing pipe shall be sealed with neat cement grout, according to the requirements in s. NR 812.20.

History: Cr. Register, January, 1991, No. 421, eff. 2−1−91; am. (1) (f) 2., (h), (j), (2) (a) 1. d., (3) (b) and (c), Register, September, 1994, No. 465, eff. 10−1−94.

NR 812.15 Flowing wells. (1) When a flowing well is constructed, in an area where the well driller or well constructor knows flowing wells exist, flow of water up the outside of the well casing pipe shall be prevented. Flowing well construction shall comply with the requirements of ss. NR 812.12 to 812.14, including Tables I to IV, and the additional requirements of sub. (2) and (3). Flowing wells may occur in the following areas:

(a) The aquifer is not confined and is in a discharge area, usually near a river, lake or stream as depicted in figure 3; or

(b) The aquifer is confined by an overlying impermeable geologic formation as depicted in figure 4.

(2) A flowing well shall meet the construction requirements of sub. (3) with the following modifications:

(a) If the flowing well is a potable high capacity, school or wastewater treatment plant well:

1. The reference depth to the aquifer is 60 feet rather than 40 feet or 30 feet for sandstone, except when the well is installed for a wastewater treatment plant that has a treatment pond or lagoon or sludge beds on the property, the reference depth to the aquifer is 100 feet.

2. The upper enlarged drillhole shall be 3 inches larger in diameter than the outside diameter of the well casing pipe or the outside diameter of the well casing pipe couplings, if used.

3. The annular space shall be sealed with cement grout as specified in s. NR 812.20.

(b) If the flowing well is a sandstone bedrock well, and is a nonpotable high capacity well or a low capacity well, except for school and wastewater treatment plant wells, the reference depth to the sandstone bedrock aquifer is 30 feet rather than 40 feet as for other types of bedrock.

(3) A flowing well shall be constructed according to the requirements of this subsection as follows:

(a) *Aquifer not confined.* Flowing wells constructed in areas where the aquifer is not confined shall be constructed as follows:

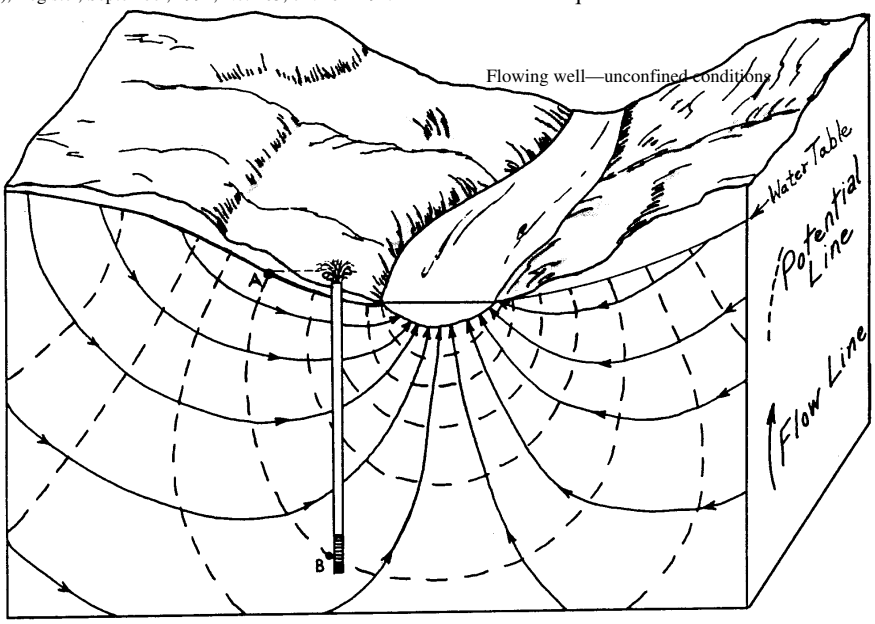

Figure 3. A flowing well in an unconfined aquifer.

1. When the flowing well is constructed using percussion methods:

a. An upper enlarged drillhole shall be constructed. Any portion of the upper enlarged drillhole constructed into unconsolidated material shall be constructed with temporary outer casing at least 4 inches larger in diameter than the nominal diameter of the well casing pipe. If, for bedrock wells, the top of bedrock is less than 40 feet from the ground surface or less than 30 feet for sand-

Removed by Register March 2015 No. 711. For current adm. code see: http://docs.legis.wisconsin.gov/code/admin_code.

stone, the temporary outer casing shall be driven with a drive−shoe to a firm seat in the top of bedrock, and the remainder of the upper enlarged drillhole shall be constructed the same diameter as the inside diameter of the temporary outer casing.

b. When the well casing pipe is set to the bottom of the temporary outer casing and driven through unconsolidated material, either into an unconsolidated aquifer, or to the top of a bedrock aquifer, the temporary outer casing shall be filled up to within 10 feet of the ground surface with a clay or sodium bentonite slurry and cuttings having a mud weight of at least 11 pounds per gallon throughout the driving.

c. When the upper enlarged drillhole extends more than 5 feet into the top of bedrock and there is a strong flow up the drillhole, the flow up the annular space shall be reduced with a packer installed surrounding the bottom of the well casing pipe. The well casing pipe shall be driven with a drive−shoe to a firm seat into the top of bedrock and the required neat cement grout shall be pumped through a conductor (tremie) pipe.

2. When a flowing well is constructed using rotary methods, heavy drilling mud having a mud weight of at least 11 pounds per gallon shall be circulated during the construction of the upper enlarged drillhole.

(b) *Aquifer is confined, is more than 40 feet from the ground surface and the confining bed is unconsolidated.* Flowing wells constructed in areas where the aquifer is confined, is more than 40 feet from the ground surface and the confining bed is unconsolidated, usually clay or hard pan, shall be constructed as follows:

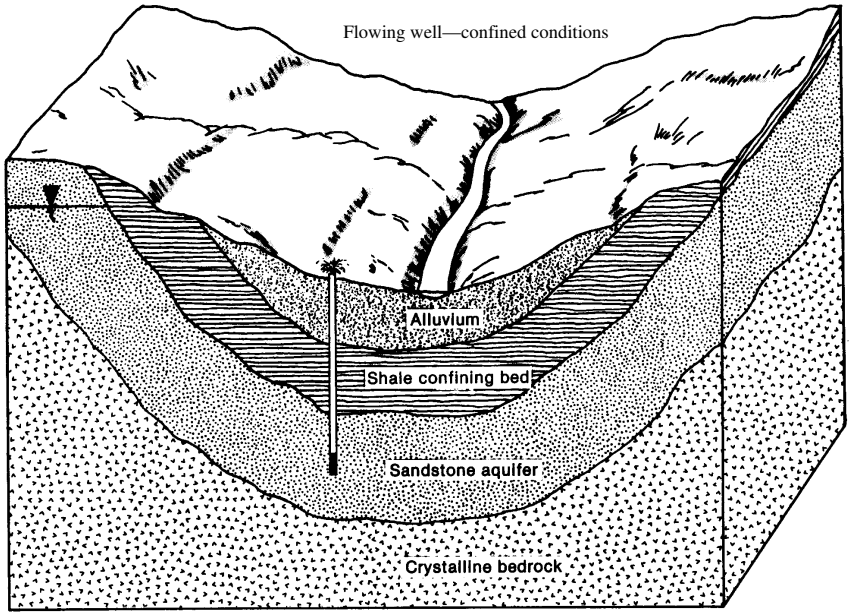

Figure 4. A flowing well in a confined aquifer.

1. When such a flowing well is constructed using percussion methods:

a. As depicted in figures 5 and 6, a temporary outer casing at least 4 inches larger in diameter than the nominal diameter of the permanent well casing pipe shall be driven, while drilling, about halfway, if known, through the unconsolidated confining bed, but not less than the depth required in Tables I to IV.

b. The well casing pipe, with drive−shoe, shall be set to the bottom of the temporary outer casing and driven, while drilling, through the remainder of the confining bed and either into the unconsolidated aquifer, or to the top of a bedrock aquifer. The annular space shall be filled up to within 10 feet of the ground surface with a clay or sodium bentonite slurry and cuttings with a mud weight of at least 11 pounds per gallon during the driving of the well casing pipe. The annular space shall be subsequently sealed, as specified in Tables I to IV, with neat cement grout or with a clay or sodium bentonite slurry according to the requirements of s. NR 812.20.

c. The well shall be completed in the manner prescribed in Tables I to IV and ss. NR 812.12 to 812.14, and the temporary outer casing shall be removed, if possible, during the sealing of the annular space.

2. When such a flowing well is constructed using rotary methods:

a. As depicted in figures 7 and 8, the well shall be constructed double−cased. The size of the inner well casing pipe shall have a nominal diameter not less than 4 inches for unconsolidated wells and not less than 6 inches for bedrock wells.

b. An outer upper enlarged drillhole at least 2 inches larger in diameter than the nominal diameter of the outer well casing pipe shall be constructed, by circulating drilling mud, from the ground surface to about halfway, if known, through the unconsolidated confining bed, but to a depth not less than the depth required by Tables I to IV.

c. An outer well casing pipe meeting the specifications of temporary outer casing described in s. NR 812.17 and assembled with welded joints shall be set to the bottom of the outer upper enlarged drillhole. Threaded and coupled well casing pipe may be used if the upper enlarged drillhole is constructed 4 inches larger in diameter than the nominal diameter of the well casing pipe. The annular space shall be sealed according to the requirements of s. NR 812.20 with clay or sodium bentonite slurry and cuttings having a mud weight of at least 11 pounds per gallon, or with neat cement grout.

d. An inner upper enlarged drillhole, the same diameter as the inside diameter of the outer well casing pipe, shall be constructed, by circulating drilling mud and cuttings with a mud weight of at least 11 pounds per gallon, through the remainder of the unconsolidated confining bed and either into an unconsolidated aquifer or to the top of a bedrock aquifer.

e. The inner well casing pipe shall have a nominal diameter 2 inches smaller than the nominal diameter of the outer well casing pipe, shall meet s. NR 812.17 and Table V requirements and shall be set to the bottom of the inner upper enlarged drillhole, and, if the aquifer is bedrock, driven to a firm seat with a drive−shoe. The annular space may be sealed with the drilling mud and cuttings or

Removed by Register March 2015 No. 711. For current adm. code see: http://docs.legis.wisconsin.gov/code/admin_code.

with neat cement grout, except when the inner upper enlarged drillhole extends more than 5 feet into bedrock, in which case the annular space shall be sealed with neat cement grout according to the requirements of s. NR 812.20.

f. The well shall be completed in the manner prescribed in Tables I to IV and by s. NR 812.14.

(c) *Aquifer is confined, is more than 40 feet from the ground surface and the confining bed is bedrock.* Flowing wells constructed in areas where the aquifer is confined, is more than 40 feet from the ground surface and where the confining bed is bedrock shall be constructed as follows:

1. When such a flowing well is constructed using percussion methods:

a. As depicted in figure 9, a temporary outer casing at least 4 inches larger in diameter than the nominal diameter of the well casing pipe shall be driven, while drilling, from the ground surface to a firm seat in the top of bedrock confining bed.

b. An upper enlarged drillhole the same diameter as the inside diameter of the temporary outer casing shall be constructed from the bottom of the temporary outer casing about halfway, if known, through the bedrock confining bed. The depth of this upper enlarged drillhole may not be less than the depth required in Tables I to IV.

c. The well casing pipe with a drive shoe shall be set to the bottom of the upper enlarged drillhole and driven to a firm seat in the bedrock confining bed.

Removed by Register March 2015 No. 711. For current adm. code see: http://docs.legis.wisconsin.gov/code/admin_code.

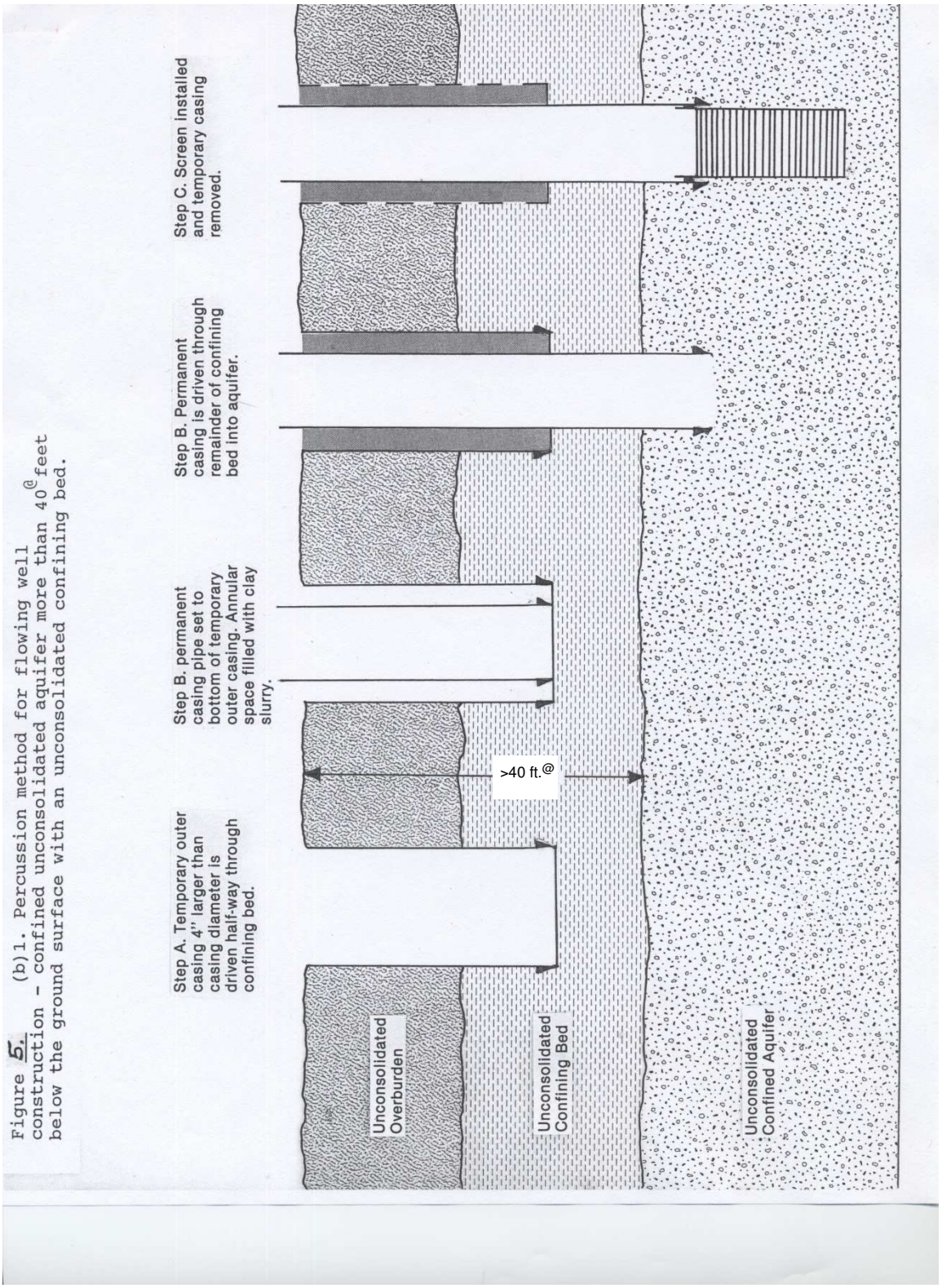

Figure 5. (b)1. Percussion method for flowing well construction - confined unconsolidated aquifer more than 40@ feet below the ground surface with an unconsolidated confining bed.

Removed by Register March 2015 No. 711. For current adm. code see: http://docs.legis.wisconsin.gov/code/admin_code.

Figure 6. (b)1. Percussion method for flowing well construction - confined bedrock aquifer more than 40@ feet below the ground surface with an unconsolidated confining bed.

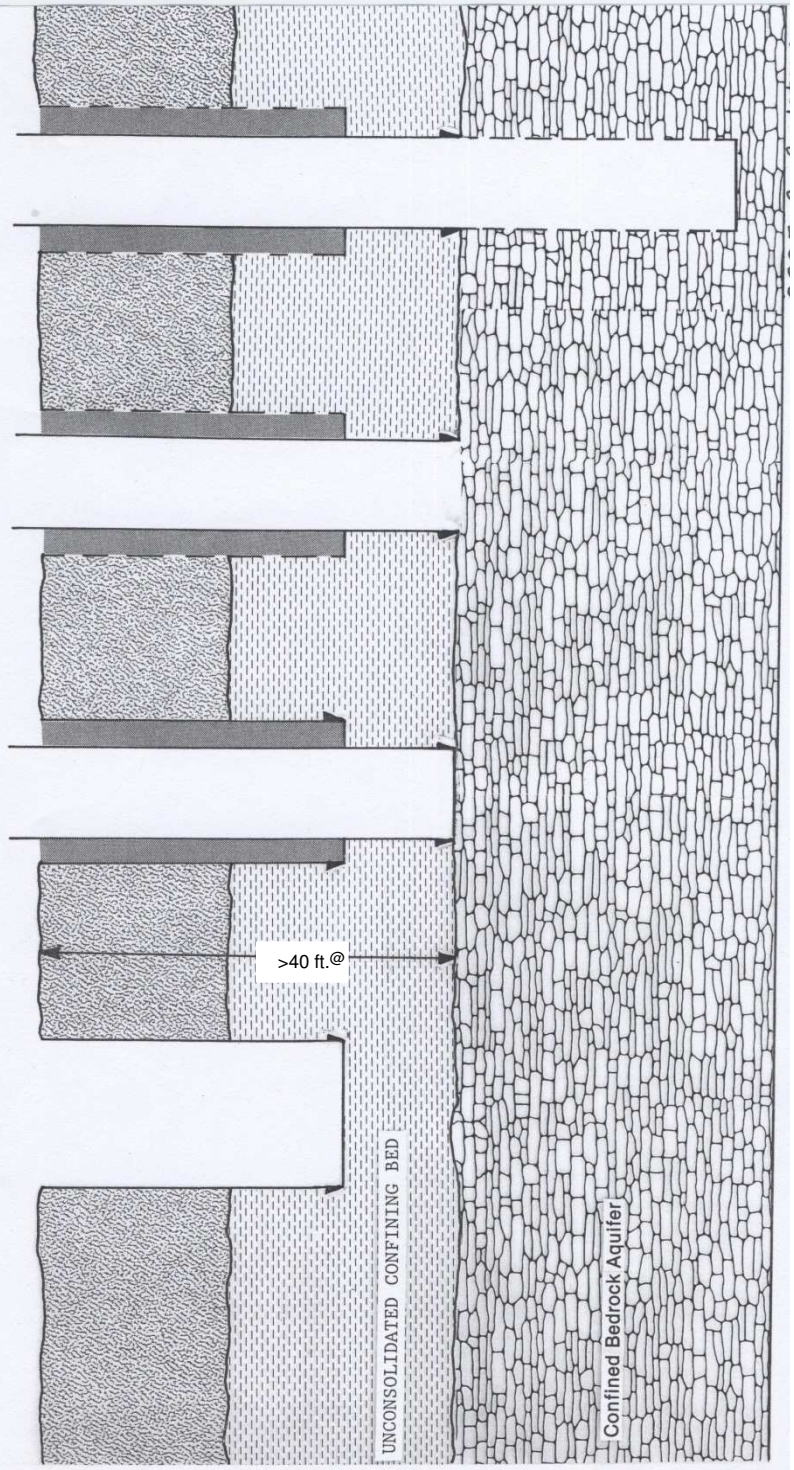

Removed by Register March 2015 No. 711. For current adm. code see: http://docs.legis.wisconsin.gov/code/admin_code.

Figure 7. (b)2. Rotary method for flowing well construction - confined aquifer more than 40@feet below the ground surface - both confining bed and aquifer are unconsolidated - double casing construction.

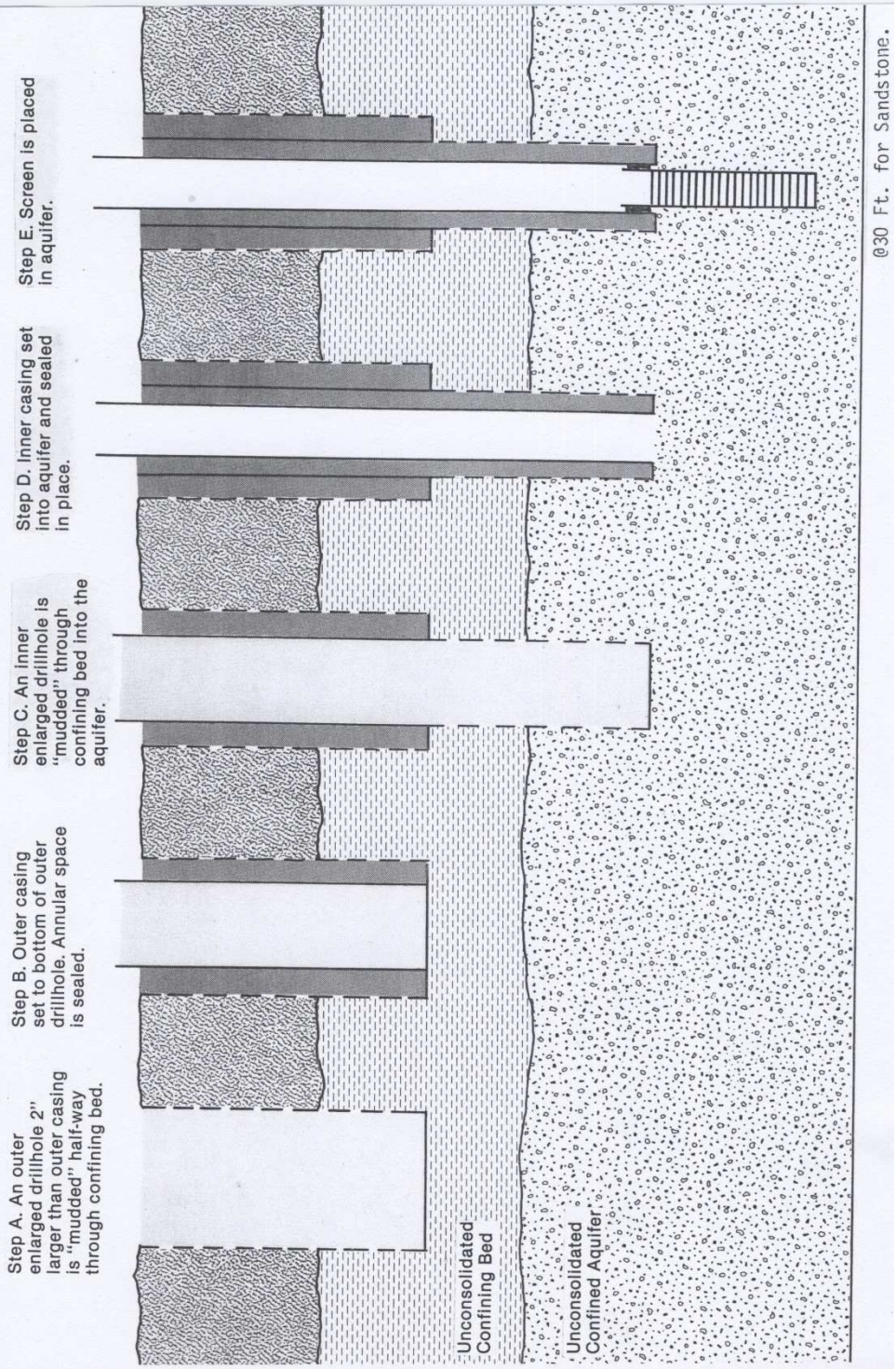

Removed by Register March 2015 No. 711. For current adm. code see: http://docs.legis.wisconsin.gov/code/admin_code.

Figure 8. (b)2. Rotary method for flowing well construction - confined bedrock aquifer more than 40@feet below the ground surface with an unconsolidated confining bed.

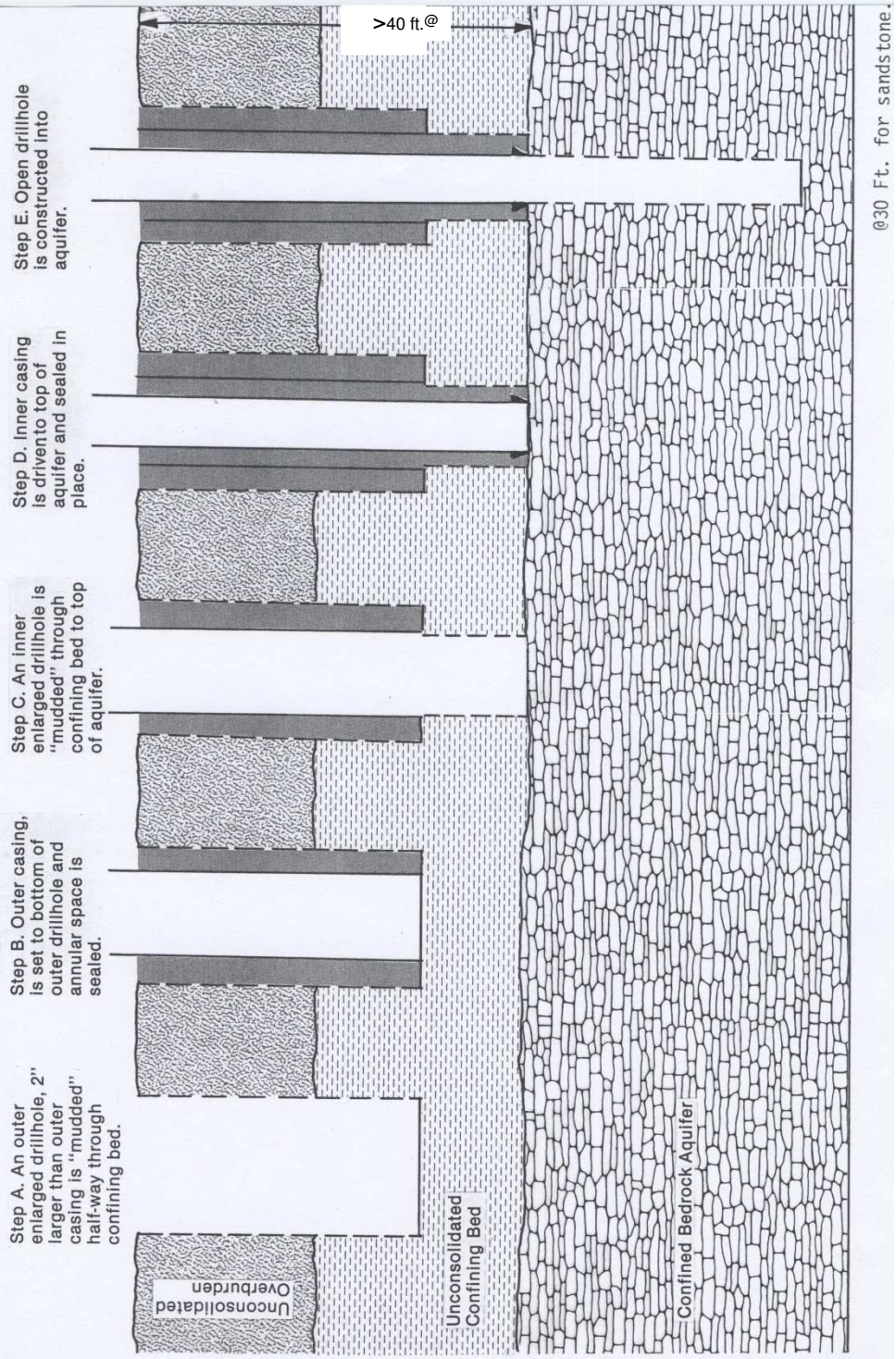

Removed by Register March 2015 No. 711. For current adm. code see: http://docs.legis.wisconsin.gov/code/admin_code.

Figure 9. (c)1. Percussion method for flowing well construction - confined bedrock aquifer more than 40@ feet below the ground surface with a bedrock confining bed.

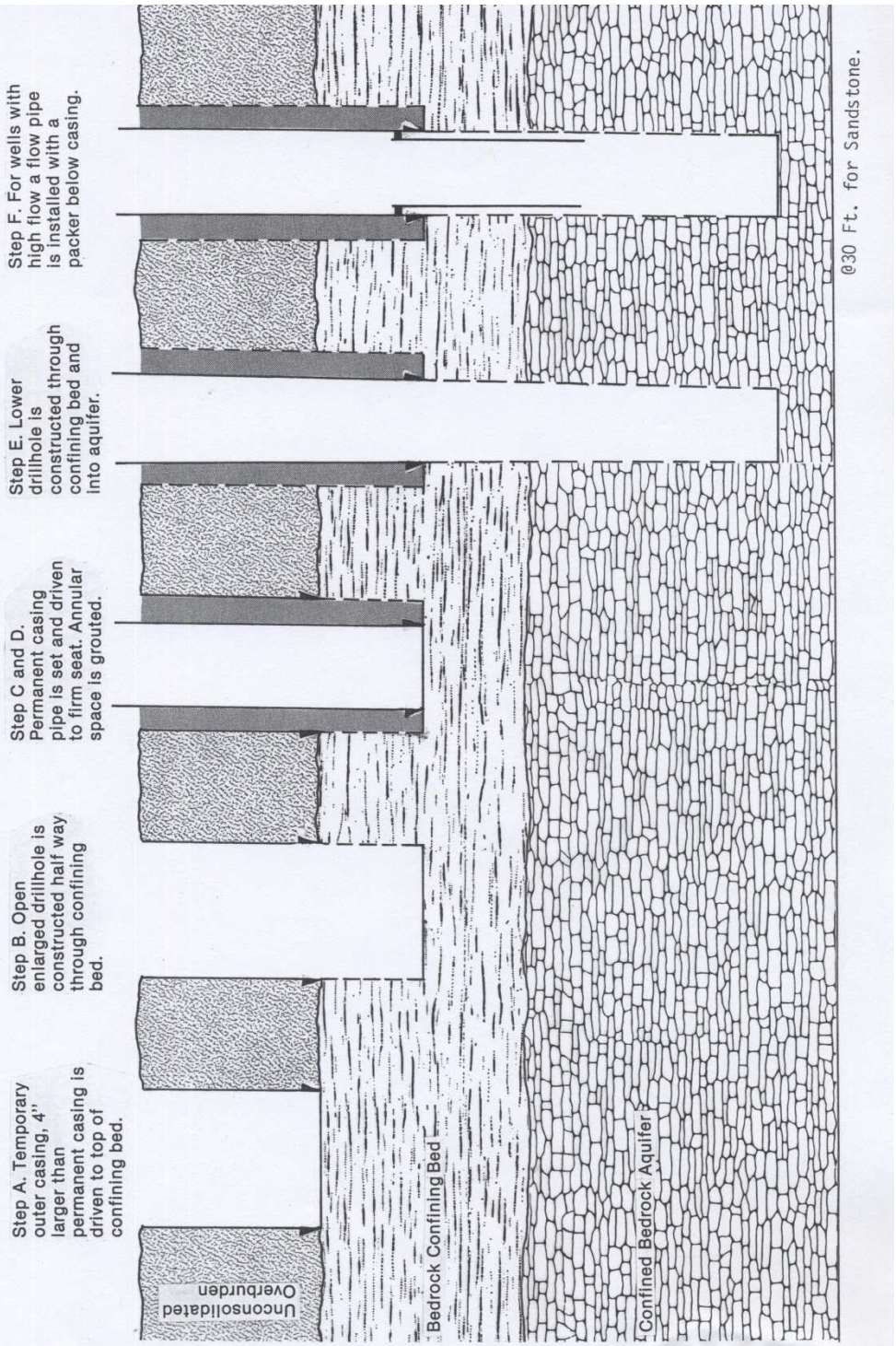

Removed by Register March 2015 No. 711. For current adm. code see: http://docs.legis.wisconsin.gov/code/admin_code.

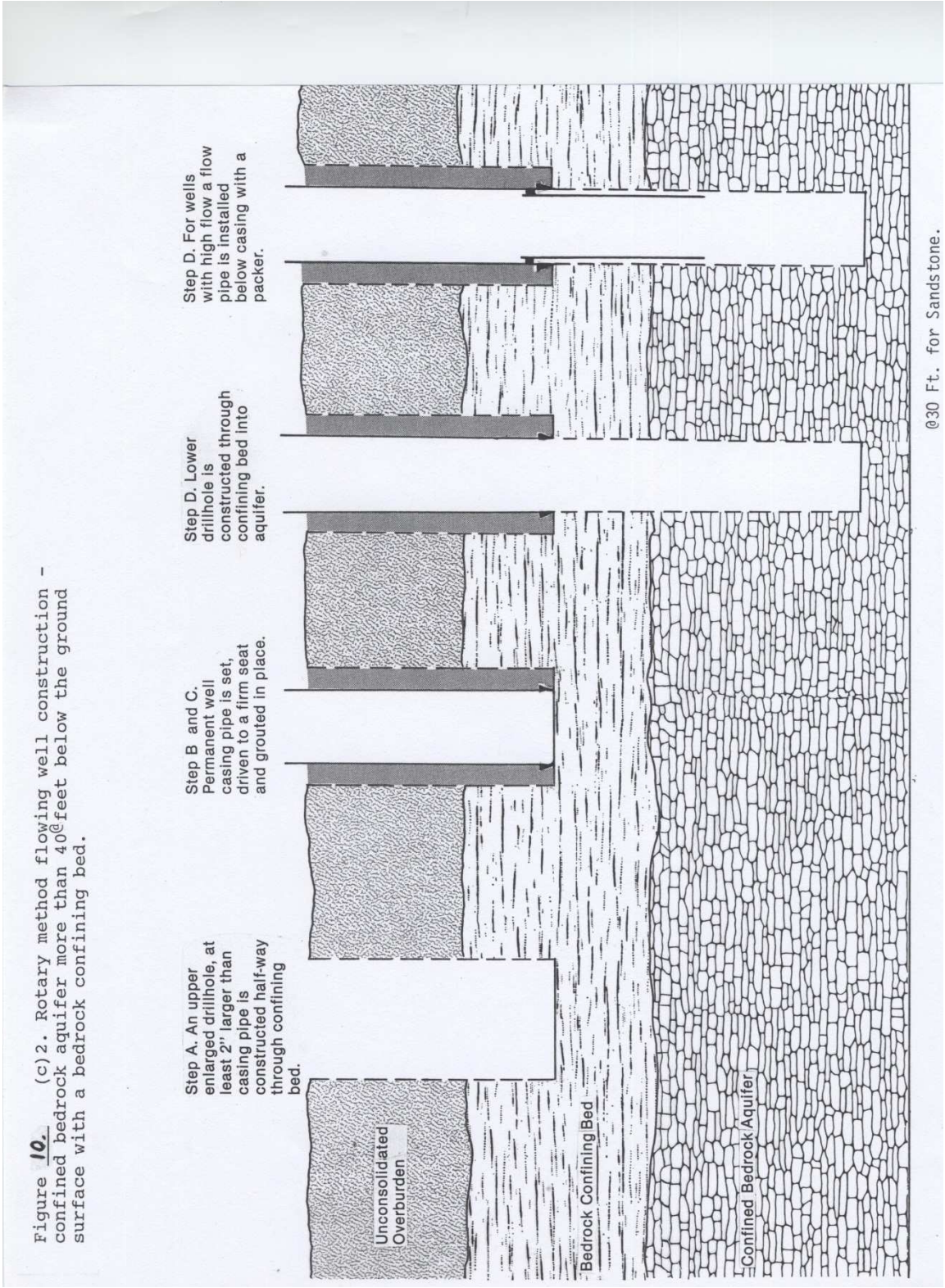

Figure 10. (c)2. Rotary method flowing well construction - confined bedrock aquifer more than 40 feet below the ground surface with a bedrock confining bed.

d. The annular space shall be sealed with neat cement grout according to the requirements of s. NR 812.20 and the temporary outer casing shall be removed if possible.

e. After waiting 24 hours following grouting, a lower drillhole the same diameter of the inside diameter of the permanent well casing pipe shall be constructed from the bottom of the permanent well casing pipe through the remainder of the confining bed into the bedrock aquifer.

f. For confined aquifers under high artesian pressure that produce a flow from the well greater than or equal to 70 gallons per minute, the department recommends that a flow pipe meeting Table V requirements be installed watertight with a packer from

Removed by Register March 2015 No. 711. For current adm. code see: http://docs.legis.wisconsin.gov/code/admin_code.

the bottom of the well casing pipe at least 10 feet into the aquifer to prevent the erosive action of the water entering the well so as to reduce the danger of water cutting a channel around the well casing pipe. In addition, the department recommends that a suitable piping arrangement, with a watertight packer or seal, be provided for the top of the well casing pipe to prevent excess pressure build−up or unnecessary flow or loss of artesian pressure.

g. The department recommends that a flow pipe as described in subd. 1. f. also be installed when the confining bed produces turbid water.

2. When such a flowing well is constructed using rotary methods:

a. As depicted in figure 10, an upper enlarged drillhole at least 2 inches larger in diameter than the nominal diameter of the well casing pipe shall be constructed about halfway, if known, through the bedrock confining bed. The depth of the upper enlarged drillhole may not be less than that required by Tables I to IV.

b. The well casing pipe assembled with welded joints shall be set to the bottom of the upper enlarged drillhole and driven to a firm seat in the bedrock confining bed. Threaded and coupled well casing pipe may be used if the upper enlarged drillhole is constructed 4 inches larger in diameter than the nominal diameter of the well casing pipe.

c. The annular space shall be sealed with neat cement grout by using an approved pressure method according to the requirements of s. NR 812.20.

d. The well shall be completed according to the percussion method requirements of subd. 1. e. to g.

(d) *Aquifer is confined and less than 40 feet from the ground surface.* When flowing wells are constructed in areas where the aquifer is confined and lies less than 40 feet below the ground surface, the wells shall be double−cased as follows:

1. An upper enlarged drillhole shall be constructed for both the outer well casing pipe and the inner well casing pipe. The size of the upper enlarged drillholes for both the outer and inner well casing pipes and the methods of their construction are the same as described in pars. (b) and (c) when the aquifer is greater than 40 feet below the ground surface.

2. The outer well casing pipe shall extend about halfway through the overlying confining bed and shall be sealed in place according to the grouting and sealing requirements of s. NR 812.20. If the confining bed is bedrock, the portion of the upper enlarged drillhole constructed into the overlying unconsolidated material above the confining bed shall be constructed by driving, while drilling, a temporary outer casing to the top of the confining bed. The outer well casing pipe shall meet, at a minimum, the specifications for temporary outer casing of s. NR 812.17 (1) (a).

3. The inner well casing pipe shall extend into the aquifer to a depth not less than the depth required in Tables I to IV. It shall be set in the inner upper enlarged drillhole, driven to firm seat if in bedrock and shall be sealed in place according to the grouting and sealing requirements of s. NR 812.20.

4. The methods of placement of the outer and inner well casing pipes shall also be the same as described in pars. (b) and (c) for those cases where the aquifer is encountered at a depth greater than 40 feet below the ground surface.

5. The size of the inner well casing pipe shall have a nominal diameter not less than 4 inches for unconsolidated formation wells and not less than 6 inches for bedrock wells.

6. When the confining bed is limestone or dolomite and lies 10 feet or less below the ground surface, the inner upper enlarged drillhole and the inner well casing pipe shall extend to at least the 60−foot depth.

History: Cr. Register, January, 1991, No. 421, eff. 2−1−91; am. (2) and (3) (intro.), (b) 2. e. and Figure 6, Register, September, 1994, No. 465, eff. 10−1−94; **CR 13−099: r. and recr. Figures (5) (b) 1., (6) (b) 1., (7) (b) 2., (9) (c) 1., (10) (c) 2., Register September 2014 No. 705, eff. 10−1−14.**

NR 812.16 Gravel−pack well construction. (1) CONDITIONS. Gravel−pack well construction may be used under any of the following conditions:

(a) In an unconsolidated formation well when the natural formation comprising the aquifer is very fine grained or when the aquifer formation is highly variable in size.

(b) In loosely−cemented sandstone aquifers that require screening to prevent sand pumping conditions.

(c) In badly fractured or decomposed crystalline bedrock formations.

(2) MATERIAL. The gravel or coarse sand to be used for the gravel−pack shall be uniformly graded, well rounded, washed and sterilized silica−based rock gravel or coarse sand, shall be free from other material and shall comply with the requirements of AWWA A100−84, section 6. The size of the gravel−pack should be based on a sieve analysis of the aquifer material. The 70% retained size of the gravel−pack shall be 4 to 6 times greater than the 70% retained size of the aquifer sample. The uniformity coefficient of the gravel−pack may not exceed 2.5.

(3) SCREENS. Screens to be placed in gravel−pack wells shall have a set of centering guides on the top and bottom of the screen to ensure an even gravel−pack. The screen slot openings shall be sized to retain 90% of the gravel−pack.

(a) *Screen type.* Screens installed within gravel−packs for nonpotable high capacity wells and for low capacity wells, including school and wastewater treatment plant wells, shall be continuous−slot. Screens for potable high capacity wells shall be continuous−slot, V−shaped wire wrap on a rod base. As an alternative, louvered, shutter−type screens may be used with gravel−packs for any type of well provided they are designed and installed in a manner such that water from the well is practicably free of sand. Screen selection for dewatering wells is optional.

(b) *Screen material.* For potable wells, the screen material shall be stainless steel, everdur, monel or brass. Brass screens may not have a lead content of more than 8%. Low carbon steel or low carbon steel−galvanized screens may also be used for nonpotable wells, but burlap or other organic material may not be used as a filter wrap surrounding screens.

(c) *Method of screen attachment.* The screen may either be permanently welded or threaded onto the bottom of the well casing pipe or may be installed with the telescope method.

(4) PLACEMENT. The gravel−pack shall be placed through an adequately sized metal conductor pipe placed in the annular space. The gravel−pack shall surround the entire screen and shall extend at least 2 feet above the top of the screen. At least a 2−foot sand seal shall be placed upon the top of the gravel−pack to prevent the required annular space sealing material from entering the gravel−pack. The gravel−pack may not extend closer to the ground surface than the minimum depth for the upper enlarged drillhole specified in Tables I to IV.

(5) THICKNESS. To allow for adequate well development the department recommends that the gravel−pack not exceed 4 inches in thickness, on one side. The gravel−pack may not be less than 2 inches in thickness, on one side. The diameter of the upper enlarged drillhole shall be sized to accommodate the thickness of the gravel−pack.

History: Cr. Register, January, 1991, No. 421, eff. 2−1−91; am. (3) (a), Register, September, 1994, No. 465, eff. 10−1−94.

NR 812.17 Well casing and heat exchange pipe, liner pipe and materials. (1) GENERAL. Well and heat exchange drillhole casing pipe, heat exchange loop pipe, and liner pipe shall be new, unused, and nonreclaimed pipe except as specified in s. NR 812.26 (5). The pipe shall meet ASTM or API standards and shall also meet the following requirements:

(a) *Temporary casing.* Temporary casing pipe for all wells and heat exchange drillholes, or well casing pipe greater than 12−inch diameter used for nonpotable wells may be a lighter weight steel

Removed by Register March 2015 No. 711. For current adm. code see: http://docs.legis.wisconsin.gov/code/admin_code.

pipe than specified for a given diameter in Table V. Pipe for nonpotable wells greater than 12−inch diameter shall have a minimum wall thickness of at least 0.250 inches and be able to withstand the structural stress imposed by construction conditions. Thermoplastic pipe meeting the minimum requirements of sub. (3) may be used for temporary casing for heat exchange drillholes in caving formations.

(b) *Pipe for liners.* Liner pipe installed solely to seal off a caving or sloughing zone in a well or heat exchange drillhole shall be new, unused and nonreclaimed steel or thermoplastic pipe. Steel pipe shall also meet the specifications of Table V except that it may have a lesser wall thickness than what is required in Table V for the diameter of pipe used. Steel pipe for such liners shall have a minimum wall thickness of 0.216 inches. The pipe may have the largest practical diameter allowing installation in the well. When thermoplastic pipe is used for such liners, it shall meet the minimum requirements of sub. (3). Liner pipe used in all other situations shall meet the specifications in Table V for steel pipe or the requirements of sub. (3), and the cement grout annular space seal thickness for thermoplastic pipe may not exceed 1−1/2 inches. For the requirements for the installation of liner pipe see s. NR 812.21.

(c) *Diameter uniformity.* Within any separate string of well casing pipe, all lengths of pipe used shall be of the same diameter.

(2) STEEL WELL CASING PIPE. (a) *Specifications.* Steel well casing pipe shall have the dimensions and weights specified in Table V except as exempted in sub. (1) (a) and (b). ASTM A 120 pipe may not be used. Well casing pipe used in initial well construction or liner pipe used for reconstruction of a well with water containing contaminant levels exceeding the drinking water standards in s. NR 812.06 shall be new steel pipe meeting one of the following standards:

1. ASTM A 53;
2. ASTM A 106;

Note: The ASTM specification for A 120 well casing pipe was withdrawn in 1987.

3. ASTM A 589—Type I, Grade A or B—Type II, Grade A, Type III—driven well pipe;
4. API 5CT;
5. API 5D; or
6. API 5L.

(b) *Water well driller, heat exchange driller; well constructor responsibilities.* Well and heat exchange drillers and well constructors may not use unmarked or inadequately marked well or heat exchange drillhole casing pipe for permanent well or heat exchange drillhole casing pipe. It is the well and heat exchange driller's or well constructor's responsibility to use well casing pipe that meets the requirements of this chapter. The well and heat exchange driller or well constructor shall examine all shipments of well or heat exchange drillhole casing pipe received and shall reject any defective length of pipe and return it to the manufacturer or supplier. When the well and heat exchange drillhole casing pipe or the pipe markings are of questionable condition, the well and heat exchange driller or well constructor shall supply the department with the manufacturer's mill certification papers listing the pipe specifications including the heat numbers.

(c) *Defective pipe.* Well and heat exchange drillhole casing or heat exchange loop pipe may be inspected by the department. Any defective length may be rejected by the department and may not be used in well construction. Reject pipe may include:

1. Pipe with girth welded joints;
2. Pipe with welded patches;
3. Pipe not conforming to the marking requirements of par. (d);
4. Pipe with defects, such as cracks, open welds, partial or incomplete welds, open seams, laminations in pipe wall which exceed 12−1/2% of wall thickness, or slivers which exceed 12−1/2% of wall thickness.
5. Pipe with coatings containing contaminants on the inside of the pipe.
6. Pipe with heavy coatings of paint on the outside of the pipe.

(d) *Marking requirements.* Each length of well casing pipe 2 inches or larger in diameter shall meet the requirements in Table V and shall be legibly marked in conformance with the ASTM or API marking specifications including color identification in the form of bands. Except where identified in this subdivision, each length of pipe shall show the manufacturer's name or trademark; ASTM marking or API monogram, specification number and grade; diameter in inches; wall thickness or weight in pounds per foot; whether seamless or welded and type of weld. Specific well casing pipe marking requirements are as follows:

1. ASTM A 53: manufacturer's name or mark; ASTM designation, specification number and grade;process of manufacture, continuous welded (type F), electric−resistance—welded A, electric−resistance—welded B, seamless, or seamless B, XS for extra strong, XXS for double extra strong.
2. ASTM A 106: manufacturer's name or mark; ASTM designation and specification number; schedule number; hydrostatic test pressure when tested, the letters "NH" when not tested;symbol "S" if the section of pipe conforms to the supplementary requirements for chemical composition, transverse tension and flattening tests and metal structure and etching tests;weight of pipe if pipe is greater than 4 inches in diameter.
3. ASTM A 589: manufacturer's name or mark; ASTM designation, specification number and grade; wall thickness; nominal or outside diameter; process of manufacture, butt−welded, electric−resistance—welded, or seamless; grade, for Type I—Drive Pipe;type number, Type I—Drive Pipe, Type II—Water−Well Reamed and Drifted Pipe, Type III—Driven Well Pipe.
4. API 5A, API 5AX, API 5L and API 5LX: manufacturer's name or mark; API monogram and specification; size, outside diameter; weight per foot; grade of pipe; process of manufacture, S for seamless, E for electric weld, and F for butt weld pipe; hydrostatic test pressure.
5. API 5D: manufacturer's name or mark; API specification; Compatible standards; Unfinished pipe (UF), if plain−end; Size and weight designation; Grade.
6. API 5L: manufacturer's name or mark; API specification; Compatible standards; Size and weight designation; Grade; Process of manufacture, S for seamless, E for electric weld, F for continuous−weld pipe; Heat treatment symbol; Hydrostatic test pressure, if higher than standard pressure.
7. API 5CT: manufacturer's name or mark; API specification; Compatible Standards; Unfinished pipe (UF), if plain−end; Size and weight designation; Grade; Process of manufacture; Test pressure; Type of thread (if used); Heat treatment.

Note: The listed ASTM and API specifications are available for inspection at the offices of the department of natural resources, the secretary of state, and the legislative reference bureau and may be obtained for personal use from the American Society for Testing and Materials, 1916 Race Street, Philadelphia, Pennsylvania 19103 and the American Petroleum Institute, Publication and Distribution Section, 1220 L Street, Northwest, Washington, D.C. 20005.

(e) *Assembly and installation.* When steel well casing pipe is driven or installed it shall be accomplished in a manner such that injury to the well casing pipe does not result which may affect the quality of the water supply. Steel well casing pipe shall be assembled watertight by correctly mated, recessed type couplings having the weights and diameters as listed in Table V or by means of joints welded in accordance with the specifications in the American Welding Society manual, AWS D10.12−89, "Recommended Practices and Procedures for Welding Low Carbon Steel Pipe." No other means of assembly may be used without approval. Steel well casing pipe to be assembled with welded joints shall have beveled ends. The weld shall fill the bevel. The department recommends that a minimum of 2 welding passes be made for any pipe having a diameter larger than 7 inch outside diameter.

Removed by Register March 2015 No. 711. For current adm. code see: http://docs.legis.wisconsin.gov/code/admin_code.

(3) THERMOPLASTIC WELL CASING PIPE. (a) *Pipe and material specifications:* 1. Thermoplastic well casing pipe and couplings shall be new polyvinyl chloride (PVC) or acrylonitrile−butadiene−styrene (ABS) material produced to and meeting the ASTM F 480 standard and shall have a standard dimension ratio (SDR) of 21, 17 or 13.5. Styrene−rubber thermoplastic well casing pipe, including ASTM F 480 may not be used.

2. The nominal well casing pipe diameter shall be at least 4 inches.

3. The thermoplastic well casing pipe, pipe couplings, cement, primer and other components used shall be approved for well casing pipe in potable water supplies by the NSF Standard Number 14 as it relates to well casing pipe, or an approved equivalent organization. Approval of alternate organizations shall be based on demonstration of unbiased and appropriate testing methods at least as stringent as NSF methods.

4. The well and heat exchange drillhole casing pipe shall be marked in accordance with the ASTM F 480 specification and this section. The pipe shall be marked at least every 5 feet showing the nominal size; standard dimension ratio or schedule number; type of material; the wording — "well casing" — followed by impact classification; designation "ASTM F 480" including year of issue of the standard with which the well casing pipe complies; manufacturer's name or trademark; manufacturer's code for resin manufacture, lot number and date of manufacture; and the NSF−WC designation or other approved laboratory's seal or mark.

5. Prior to use the thermoplastic well casing pipe shall be inspected for defects. Pipe with defects shall not be used for permanent well casing pipe.

6. The thermoplastic pipe shall be assembled with either flush−threaded joints, integral−bell, solvent−cemented joints or one−piece solvent cemented couplings in a manner according to the specifications in ASTM F 480. A permanent tag bearing the message"plastic well casing" shall be attached to the top of the well casing pipe, the full pitless unit, or the riser pipe extending up from a short−model pitless unit.

7. When thermoplastic well casing pipe is extended above the depth of the buried pump discharge pipe, the thermoplastic pipe shall be contained in a pump house or in a oversized steel pipe extending to the top of the thermoplastic pipe.

8. The listed ASTM and NSF standards are available for inspection at the offices of the department of natural resources, the secretary of state and the legislative reference bureau, and may be obtained for personal use from the American Society for Testing and Materials, 1916 Race Street, Philadelphia, Pennsylvania 19103 and from the National Sanitation Foundation Testing Laboratories, Inc.; P.O. Box 1468, Ann Arbor, MI 48106.

Note: The requirements for the installation of pitless adapters, pitless units or above−ground discharges for wells constructed with thermoplastic well casing pipe are in s. NR 812.31 (4).

History: Cr. Register, January, 1991, No. 465, eff. 2−1−91; am. (1) (a) and (b), (2) (a), (b), (c) (intro.) and 3., (3) (a) 1. and 6., cr. (1) (c), (2) (c) 6. and (d) 5. to 7., renum. (2) (d) 1. a. to d. and (f) to be (2) (d) 1. to 4. and (e) and am. (2) (d) 1. and 3., r. (2) (d) 2., Register, September, 1994, No. 465, eff. 10−1−94; correction in (3) (a) 8. made under s. 13.92 (4) (b) 6., Stats., Register July 2010 No. 655; **CR 13−096: am. (title), (1), (2) (b), (c) (intro.), (3) (a) 4. Register September 2014 No. 705, eff. 10−1−14.**

TABLE V

MINIMUM STEEL WELL CASING PIPE AND COUPLING WEIGHTS AND DIMENSIONS

WELL CASING PIPE									REAMED & DRIFTED COUPLINGS	
Size	Weight in Pounds per Foot				Thickness In Inches		Diameter In Inches		Diameter & Length	
	Threaded & Coupled		Plain End							
Diameter In inches	Low Caps	Potable Hi Caps, Schools & WWTP's	Low Caps	Potable Hi Caps, Schools, & WWTP's		Potable Hi Caps, Schools & WWTP's	External	Internal	External Diameter Inches	Length In Inches
1	1.70		1.68		.133		1.315	1.049	1.576	2−5/8
1−1/4	2.30		2.27		.140		1.660	1.380	1.900	2−3/4
1−1/2	2.75		2.72		.145		1.900	1.610	2.200	2−3/4
2	3.75		3.65		.154		2.375	2.067	2.750	2−7/8
2−1/2	5.90		5.79		.203		2.875	2.469	3.250	3−15/16
3	7.70		7.58		.216		3.500	3.068	4.000	4−1/16
3−1/2	9.25		9.11		.226		4.000	3.548	4.625	4−3/16
4	11.00		10.79		.237		4.500	4.026	5.200	4−5/16
5	15.00		14.62		.258		5.563	5.047	6.296	4−1/2
6	19.45		18.97		.280		6.625	6.065	7.390	4−11/16
6−5/8 OD	20.00		19.49		.288		6.625	6.049	7.390	4−11/16
7 OD	23.00		22.63		.317		7.000	6.366	7.657	4−11/16
8	25.55	29.35	24.70	28.55	.277	0.322	8.625	8.071	9.625	5−1/16
10	35.75	41.85	34.25	40.48	.307	0.365	10.750	10.136	11.750	5−9/16
12	45.45	51.15	43.77	49.56	.330	0.375	12.750	12.090	14.000	5−15/16
14 OD	57.00		54.57		.375		14.000	13.250	15.000	6−3/8
16 OD	65.30		62.58		.375		16.000	15.250	17.000	6−3/4
18 OD	73.00		70.59		.375		18.000	17.250	19.000	7−1/8
20 OD	81.00		78.60		.375		20.000	19.250	21.000	7−5/8
22 OD			114.81		.500		22.000	21.000		
24 OD			125.49		.500		24.000	23.000		

Note: The weight of threaded and coupled well casing pipe includes the weight of the coupling.

Note: Two−inch diameter or smaller well casing pipe couplings shall have at least 11−$^{1}/_{2}$ threads per inch. Larger diameter couplings shall have at least 8 threads per inch.

Removed by Register March 2015 No. 711. For current adm. code see: http://docs.legis.wisconsin.gov/code/admin_code.

Note: WWTP means wastewater treatment plant.

Note: The internal diameter of API 5CT and API 5D, 4 and 5−inch diameter pipe is significantly smaller than the listed diameter indicated in the above table. When using these pipes, care should be taken to ensure that the pump to be installed in the well can be set and removed without difficulty.

NR 812.18 Welding procedures. (1) Welding procedures for plain end well casing pipe shall be made watertight in accordance with the specifications in the American Welding Society manual, AWS D10.12−89, "Recommended Practices and Procedures for Welding Low Carbon Steel Pipe". Well casing pipe to be welded shall conform to the specifications of s. NR 812.17 (2). Welding procedures for pitless adapter connections to well casing pipe shall be made watertight in accordance with welding procedures in the AWS Structural Welding Code, AWS D1.1.

(2) The referenced AWS manuals are incorporated by reference. They are available for inspection at the department, the legislative reference bureau and the secretary of state's office and may be obtained for personal use from the American Welding Society, P.O. Box 351040, Miami, Florida 33135.

(3) Fusion welding connection for vertical heat exchange piping shall be done using socket fusion, saddle fusion or butt fusion type, in accordance with pipe manufacturer's instructions or as referenced in ASTM D 2610, D 2683 and D2657. Joint surfaces shall be clean and moisture free.

History: Cr. Register, January, 1991, No. 421, eff. 2−1−91; correction made under s. 13.92 (4) (b) 6., Stats., Register July 2010 No. 655; **CR 13−096: cr. (3) Register September 2014 No. 705, eff. 10−1−14; correction in numbering (1), (2) made under s. 13.92 (4) (b) 1., Stats., Register September 2014.**

NR 812.19 Well plumbness and alignment. Well drillers and well constructors shall construct drilled wells to comply with the well plumbness and alignment requirements to the depth to which the permanent pump will be set plus 25% of that depth. When a well is less than 100 feet deep, the allowable deviation from plumb of the well centerline shall be proportional to wells 100 feet deep.

(1) PLUMBNESS. The plumbness requirements apply only to wells with 10−inch diameter and larger well casing pipe. The deviation per 100 feet of well depth from plumb of the center line of the well may not exceed 75% of the well diameter.

(2) ALIGNMENT. (a) Wells shall allow the free passage of the pump to be permanently installed in the well to the depth of pump setting plus 25% of that depth.

(b) Wells with bends which prevent setting a lineshaft turbine pump to the desired pump or pump bowls setting, plus 25% of that depth, such that bending of the pump bowls or pump column causes damage to the bearings, will not be accepted by the department unless accepted by the owner of the well.

History: Cr. Register, January, 1991, No. 421, eff. 2−1−91.

NR 812.20 Grouting and sealing. (1) GROUTING AND SEALING MATERIALS. (a) *Neat cement grout.* Neat cement grout shall consist of a mixture of cement and water in the proportion of one bag of Portland cement, 94 pounds, ASTM C 150, Type I or API−10A, Class A; and 5 to 6 gallons of clean water from a known safe and uncontaminated source. Powdered bentonite may be added up to a ratio of 5 pounds per 94−pound bag of cement. Ingredients, to increase fluidity, control shrinkage or time of set may be used only with approval. Neat cement grout shall be used to seal the annular space:

1. Of low capacity wells when the upper enlarged drillhole is constructed more than 5 feet into a bedrock formation,

2. Of low capacity bedrock wells when bedrock is encountered within 40 feet of the ground surface or within 30 feet of the ground surface if the bedrock is sandstone,

3. Of potable high capacity wells,

4. Of school wells,

5. Of wastewater treatment plant wells,

6. When a liner pipe is installed for the purpose of preventing water containing contaminants with levels exceeding the drinking water standards of s. NR 812.06 from entering the well.

7. Of heat exchange drillholes if potable water or an approved fluid is continuously circulated in the loop pipe until heat of hydration subsides to a safe level below the temperature of potential loop pipe deformation.

(b) *Concrete (sand−cement) grout.* Concrete (sand−cement) grout shall consist of a mixture of cement, sand and water in the proportion of one bag of Portland cement, 94 pounds, ASTM C 150, Type I or API−10A, Class A; a cubic foot of dry sand and 5 to 6 gallons of clean water from a known safe and uncontaminated source. The sand shall meet the specifications for use in Portland cement concrete. Concrete (sand−cement) grout shall be placed with a conductor (tremie) pipe. Approval is required for the use of concrete grout. Approval for the use of concrete grout may be granted when an excessive loss of circulation in grouting with neat cement grout occurs.

(c) *Sodium bentonite water slurry (drilling mud and cuttings).* Sodium bentonite water slurry (drilling mud and cuttings). A sodium bentonite water slurry (drilling mud and cuttings) may be used as sealing material in unconsolidated formation wells or bedrock wells, provided depth to a bedrock formation or other well construction requirements in Tables I to IV do not specify the use of neat cement grout and the well is not a potable high capacity, school or wastewater treatment plant well. A mud weight of at least 11 pounds per gallon is required. Normal drilling mud circulated during the construction of wells may not meet this requirement for sealing unless additional drill cuttings are added to the slurry. Sodium bentonite water slurry (drilling mud and cuttings) is not allowed for grouting of heat exchange drillholes.

(d) *Clay slurry.* Clay slurry is a fluid mixture of water, clean native or approved commercial clay; and drill cuttings. Clay slurry may be used as an annular space sealing material for low capacity wells constructed with percussion methods, except for bedrock wells where the upper enlarged drillhole extends more than 5 feet into the bedrock or when the bedrock is encountered at a depth of less than 40 feet, 30 feet for sandstones and except for school and wastewater treatment plant wells. The clay slurry shall have a mud weight of at least 11 pounds per gallon. Clay slurry is not allowed for grouting of heat exchange drillholes.

(e) *Sodium bentonite.* A sodium bentonite grout may be used as a sealing material for heat exchange drillholes, if a minimum of a 20 percent solids mixture is maintained as per manufacturer specifications.

(f) *Sodium bentonite (bentonite−sand) grout.* Sodium bentonite grout may be mixed with clean silica sand up to a ratio of a 5 to 1 mixture of silica sand to bentonite grout, for grouting heat exchange drillholes. Higher mix ratios must receive prior approval from the department before being used. Clean silica sand shall consist of silica sand with 80 percent or more of the sand smaller than 0.0117 inch (passing U.S. Sieve #50) in size.

(g) *Cement (cement−bentonite) grout.* A cement (cement−bentonite) premix product may be used as a sealing material for heat exchange drillholes if it is approved by the department before being used. Drillers shall not mix their own ratio.

(h) *Carbon (carbon−bentonite) grout.* A carbon−bentonite premix product may be used as a sealing material for heat exchange drillholes if it is approved by the department before being used. Drillers shall not mix their own ratio.

(2) CEMENT GROUTING PROCEDURE REQUIREMENTS. The approved cement grouting procedure is as follows:

Removed by Register March 2015 No. 711. For current adm. code see: http://docs.legis.wisconsin.gov/code/admin_code.

(a) Neat cement grout shall be placed from the bottom of the open annular space up to the ground surface using one of the methods described in sub. (3).

(b) Conductor (tremie) pipe used for cement grouting shall be any of the following:

1. Metal pipe,

2. Rubber−covered hose reinforced with braided fiber or steel and rated for at least 300 psi, or

3. Thermoplastic pipe rated for at least 100 psi including:

a. Polyvinyl chloride (PVC),

b. Chlorinated polyvinyl chloride (CPVC),

c. Polyethylene (PE),

d. Polybutylene (PB), and

e. Acrylonitrile butadiene styrene (ABS).

(c) The grout shall be placed in one continuous operation, if possible. It is the well or heat exchange driller's or well constructor's responsibility to ensure that all necessary materials are on the job site. If unforeseen circumstances prevent completing the cement grouting work in one continuous operation, the well or heat exchange driller or well constructor shall report the non−continuous grouting operation and the reason for it on the construction report for the well.

(d) When a conductor (tremie) pipe is used, the bottom end shall be kept submerged in the grout throughout the grouting process.

(e) The grout shall be brought up to the ground surface. The density of the grout flowing from the annular space at the ground surface shall be the same as the density of the grout being placed. Any settling of the grout more than 6 feet below the ground surface shall be made up. The well driller or well constructor shall add grout until it comes back up to the ground surface.

(f) When temporary outer casing is used to construct the upper enlarged drillhole an attempt shall be made to remove the temporary outer casing during or after the grouting process. If possible, it shall be removed. The grout level shall be retained above the bottom of the casing during removal of the casing.

(g) When an upper enlarged drillhole has been constructed to accommodate the setting and removal of temporary outer casing, the annular space between the temporary outer casing and the well casing pipe shall be grouted before the temporary outer casing is pulled. After the grout between the temporary outer casing and the well casing pipe flows at the ground surface the annular space outside the temporary outer casing shall be grouted by placing a tremie pipe to the bottom of the outer annular space. The grout shall flow at the ground surface before the temporary outer casing is pulled.

(h) The well driller or well constructor shall allow the grout to set for at least 12 hours before commencing further well construction.

(i) Prior approval is required for the use of the "Halliburton" grouting methods and the "grout displacement" grouting method when the upper enlarged drillhole is more than 200 feet deep or when drilling mud or bentonite slurry has not been circulated up to the ground surface in the annular space prior to grouting.

(j) The "conductor (tremie) pipe−gravity" method is not an approved pressure method of grouting. All other methods described in sub. (3) are approved pressure methods for cement grouting and sealing and shall be used when neat cement grout is required to seal the annular space when the upper enlarged drill−hole is less than 4 inches larger in diameter than the nominal diameter of the well casing pipe or when the upper enlarged or heat exchange drillhole extends greater than 25 feet deep or when the heat exchange drillhole is less than 25 feet deep.

(3) CEMENT GROUT PLACEMENT METHODS. This subsection describes approved cement grout placement methods.

(a) *Conductor (tremie) pipe−gravity.* As depicted in figure 11, grout material may flow by gravity through a funnel or hopper connected to a conductor pipe. The conductor (tremie) pipe shall be lowered to the bottom of the annular space to be grouted and the grout material placed from the bottom up. The end of the conductor pipe shall be kept submerged in the grout at all times. This method may be used only when the upper enlarged drillhole is at least 4 inches larger in diameter than the nominal diameter of the well casing pipe and is less than 100 feet deep or when the heat exchange drillhole is less than 25 feet deep. The grout shall flow at the surface with the same consistency as the grout entering the well.

(b) *Conductor (tremie) pipe−pumped.* As depicted in figure 12, the grout material shall be placed by a pump through a conductor pipe into the annular space between the well casing pipe and the upper enlarged drillhole wall or inside surface of the temporary outer casing or a heat exchange drillhole. The minimum diameter of the upper enlarged drillhole shall be as specified in Tables I to IV. The conductor pipe shall be lowered to the bottom of the annular space to be grouted and the grout material shall be pumped from the bottom up. The end of the conductor pipe shall be kept submerged in the grout at all times and the conductor pipe shall be maintained full of grout. The grout shall flow at the surface with the same consistency as the grout entering the well.

(c) *Grout (float) shoe−continuous injection.* As depicted in figure 13, the bottom of the well casing pipe shall be fitted with a grout (float) shoe equipped with a back pressure (check) valve. A conductor pipe or drill stem shall be connected to the grout shoe and shall extend up through the well casing pipe to a grout pump at the ground surface. The well casing pipe shall be suspended a short distance above the bottom of the upper enlarged drillhole. Grout material shall be pumped through the conductor pipe and the grout shoe until the entire annular space is filled with grout. The conductor pipe or drill stem shall then be removed. The well casing pipe shall be set to the bottom of the upper enlarged drillhole. The grout material shall be allowed to set for at least 12 hours. Once set, the grout shoe and back pressure valve may be drilled out and the well construction continued.

(d) *Well seal/tremie pipe−pumped (Braden−head method).* As depicted in figure 14, the well casing pipe shall be suspended a short distance above the bottom of the upper enlarged drillhole. The well casing pipe and annulus shall be filled with water, drilling mud or bentonite slurry. A conductor (tremie) pipe shall be set inside the well casing pipe to the bottom and shall extend watertight through a sanitary well seal installed securely in the top of the well casing pipe. A packer may be installed inside the well casing pipe, at depth, as an alternative to using a well seal at the top. The grout shall be pumped down the conductor pipe and up the annular space. The grout shall flow at the surface with the same consistency as the grout entering the top of the conductor pipe. Immediately following grout flow at the surface, the well casing pipe shall be set to the bottom of the upper enlarged drillhole of an unconsolidated formation well or driven to a firm seat in a bedrock well.

(e) *Halliburton (double plug) method.* This method may only be used when the upper enlarged drillhole is less than or equal to 200 feet deep or when drilling mud or bentonite slurry has been circulated in the upper enlarged drillhole from the bottom up to the ground surface prior to grouting. The grout shall be placed as follows: As depicted in figure 15, the well casing pipe casing shall be suspended a short distance above the bottom of the upper enlarged drillhole. A drillable spacer plug shall be inserted into the well casing pipe and the top of the well casing pipe sealed watertight. A measured volume of grout, calculated to be of adequate quantity to seal the annular space, and to fill the bottom 10 to 15 feet of well casing pipe shall be pumped into the well casing pipe through a small diameter pipe extending watertight through the well seal. The well casing pipe shall then be opened and a sec-

Removed by Register March 2015 No. 711. For current adm. code see: http://docs.legis.wisconsin.gov/code/admin_code.

ond plug inserted on top of the grout and the top of the well casing pipe resealed. A measured volume of water, calculated to fill the well casing pipe except for the bottom 10 to 15 feet, shall be pumped into the well casing pipe, pushing the second plug to within 10 to 15 feet above the bottom of the well casing pipe and pushing most of the grout from the bottom of the well casing pipe up into the annular space. As an alternative, a drill stem may be used to push the top plug down to near the bottom of the well casing pipe. For this alternative, the plug may not be attached to the drill stem. If the bottom plug used is longer than the gap between the bottom of the suspended well casing pipe and the bottom of the upper enlarged drillhole, it is not necessary to pump in a measured volume of water. A conductor (tremie) pipe shall be available at the drill site in case the grout does not flow at the ground surface. The water pressure in the well casing pipe shall be maintained for 12 hours until the grout has set and before well construction may continue.

(f) *Halliburton (single plug) method.* This method may only be used for wells when the upper enlarged drillhole is less than or equal to 200 feet deep or when drilling mud or bentonite slurry has been circulated in the upper enlarged drillhole from the bottom up to the ground surface prior to grouting. As depicted in figure 16, the grout shall be placed as follows: The well casing pipe shall be suspended a short distance above the bottom of the upper enlarged drillhole. A measured volume of grout, calculated to seal the annular space and to fill the bottom 10 to 15 feet of well casing pipe shall be pumped into the well casing pipe through a small diameter pipe extending watertight through the well seal. A drillable spacer plug shall be inserted into the well casing pipe and the top of the well casing pipe sealed watertight. A measured volume of water, calculated to fill the well casing pipe except for the bottom 10 to 15 feet shall be pumped into the well casing pipe, pushing the plug down to about 10 to 15 from the bottom of the well casing pipe and most of the grout from the bottom of the well casing pipe up into the annular space. A landing collar should be installed near the bottom of the well casing pipe to prevent the plug from being forced out the bottom. As an alternative a drill stem may be used to push the plug down. For this alternative the plug may not be attached to the drill stem. If the plug used is longer than the gap between the bottom of the suspended well casing pipe and the bottom of the upper enlarged drillhole, it is not necessary to pump in a measured volume of water. A conductor (tremie) pipe shall be available at the drill site in case the grout does not flow at the ground surface. The water pressure in the well casing pipe shall be maintained for 12 hours until the grout has set and before well construction may continue.

(g) *Grout displacement method.* This method may only be used for wells when the upper enlarged drillhole is less than or equal to 200 feet deep or when drilling mud or bentonite slurry has been circulated in the upper enlarged drillhole from the bottom up to the ground surface prior to the grouting. As depicted in figure 17, a measured volume of grout calculated to be of adequate quantity to seal the annular space plus at least 15% of that volume shall be placed into the upper enlarged drillhole through a conductor (tremie) pipe. The well casing pipe shall be fitted with centering guides and a drillable plug at the bottom and shall be lowered through the grout to the bottom of the upper enlarged drillhole allowing the grout to be forced up into the annular space. If necessary, pressure shall be applied and maintained on the top of the well casing pipe to hold it in place for at least 12 hours or until the grout sets. Water may be added to the well casing pipe to provide extra weight. If the grout does not flow at the ground surface the remainder of the annular space shall be filled with grout placed through a conductor pipe that shall be at the drill site.

Removed by Register March 2015 No. 711. For current adm. code see: http://docs.legis.wisconsin.gov/code/admin_code.

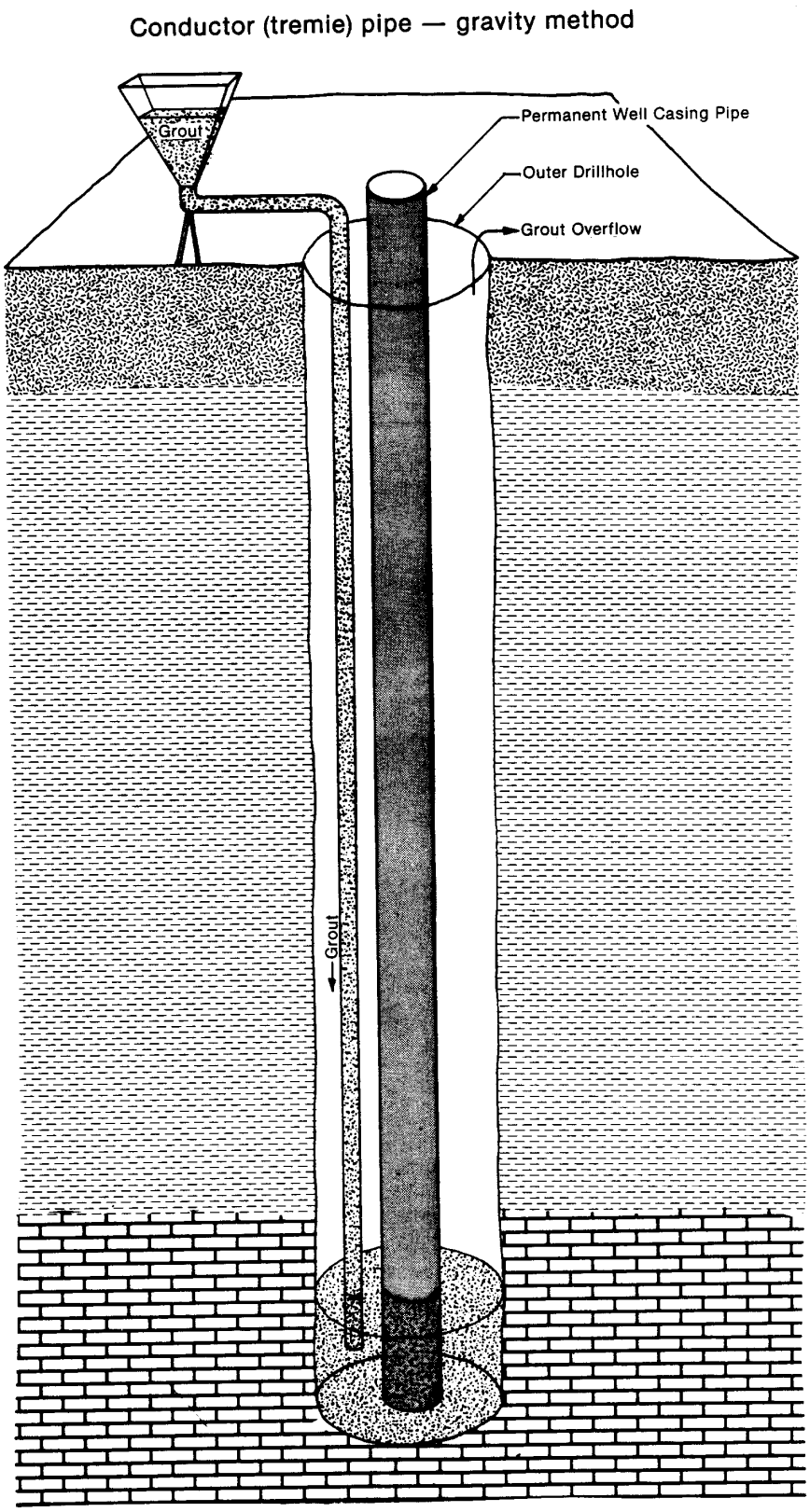

Figure 11. Conductor (tremie) pipe–gravity method for neat cement grouting.

Removed by Register March 2015 No. 711. For current adm. code see: http://docs.legis.wisconsin.gov/code/admin_code.

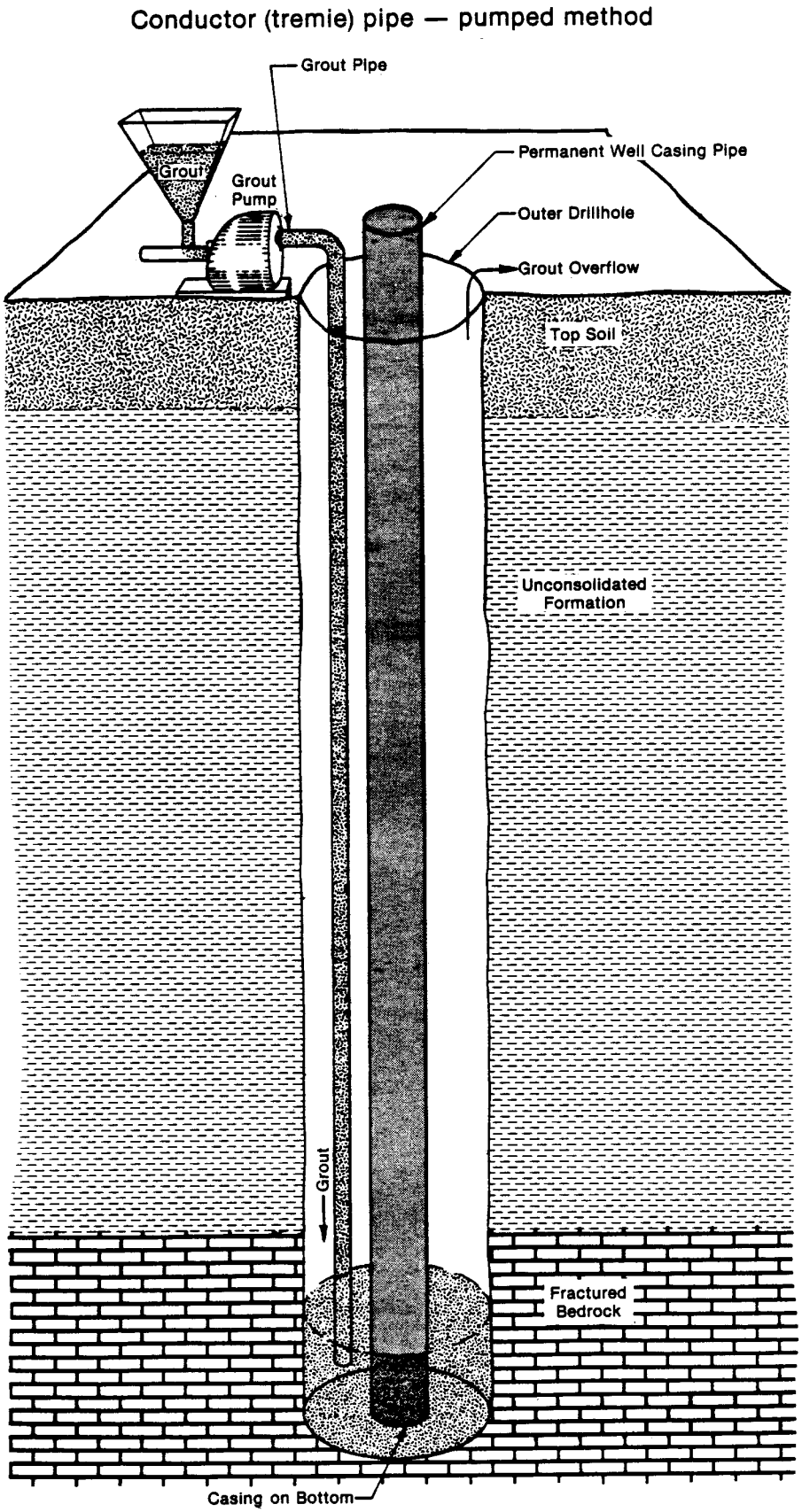

Figure 12. Conductor (tremie) pipe–pumped method for neat cement grouting.

Removed by Register March 2015 No. 711. For current adm. code see: http://docs.legis.wisconsin.gov/code/admin_code.

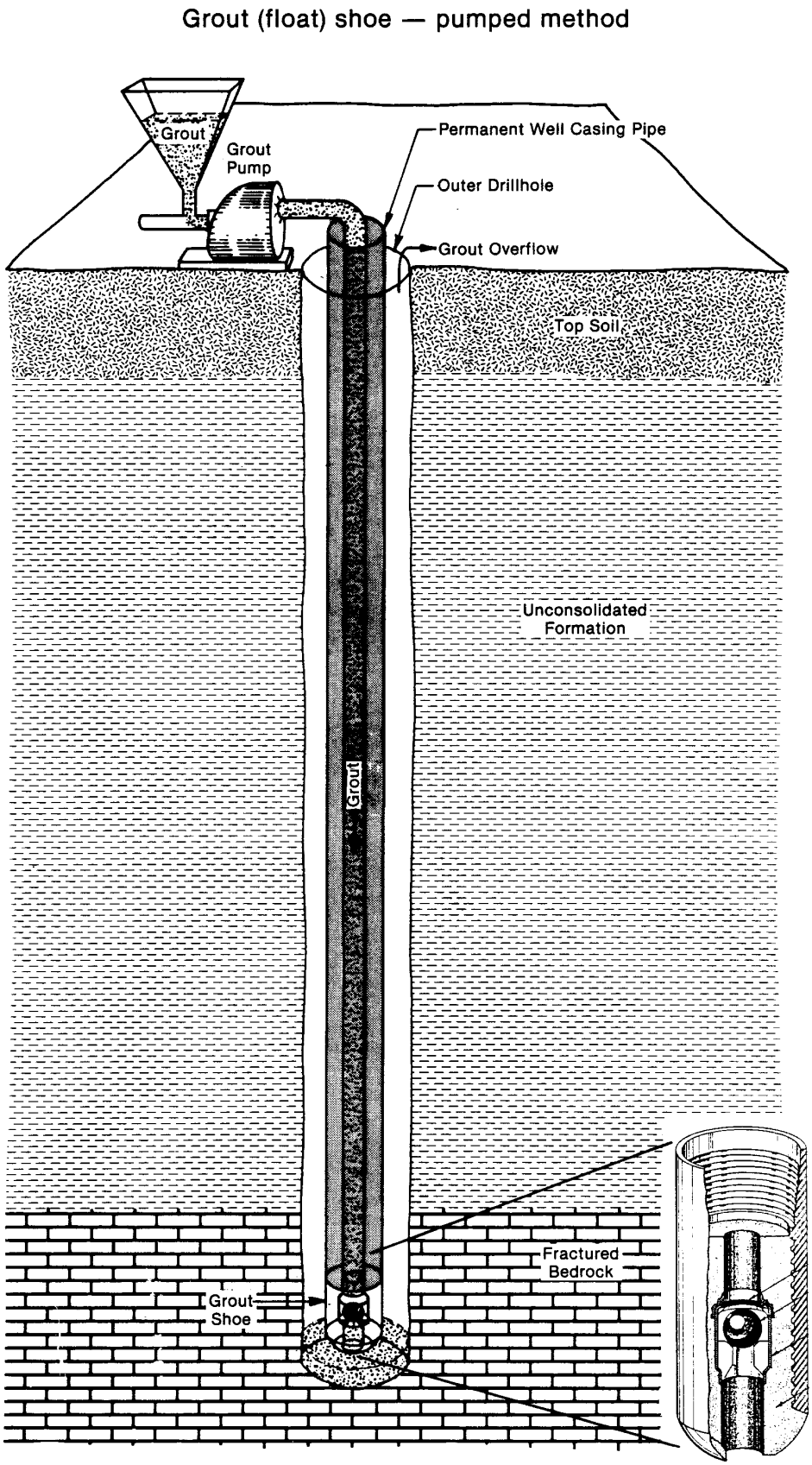

Figure 13. Grout (float) shoe–pumped method for neat cement grouting.

Removed by Register March 2015 No. 711. For current adm. code see: http://docs.legis.wisconsin.gov/code/admin_code.

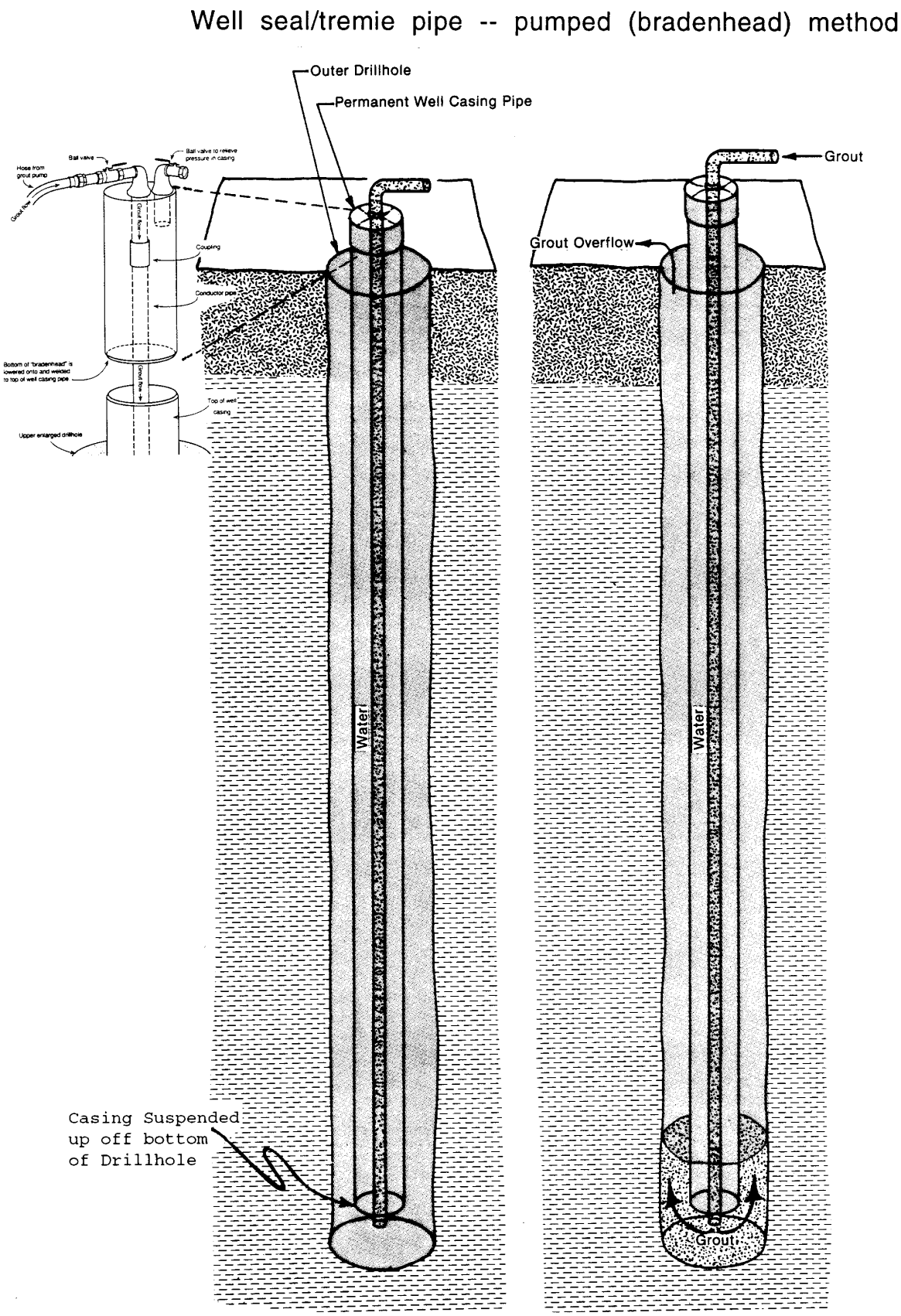

Figure 14. Well seal/conductor (tremie) pipe−pumped (Braden−Head) method for neat cement grouting.

Removed by Register March 2015 No. 711. For current adm. code see: http://docs.legis.wisconsin.gov/code/admin_code.

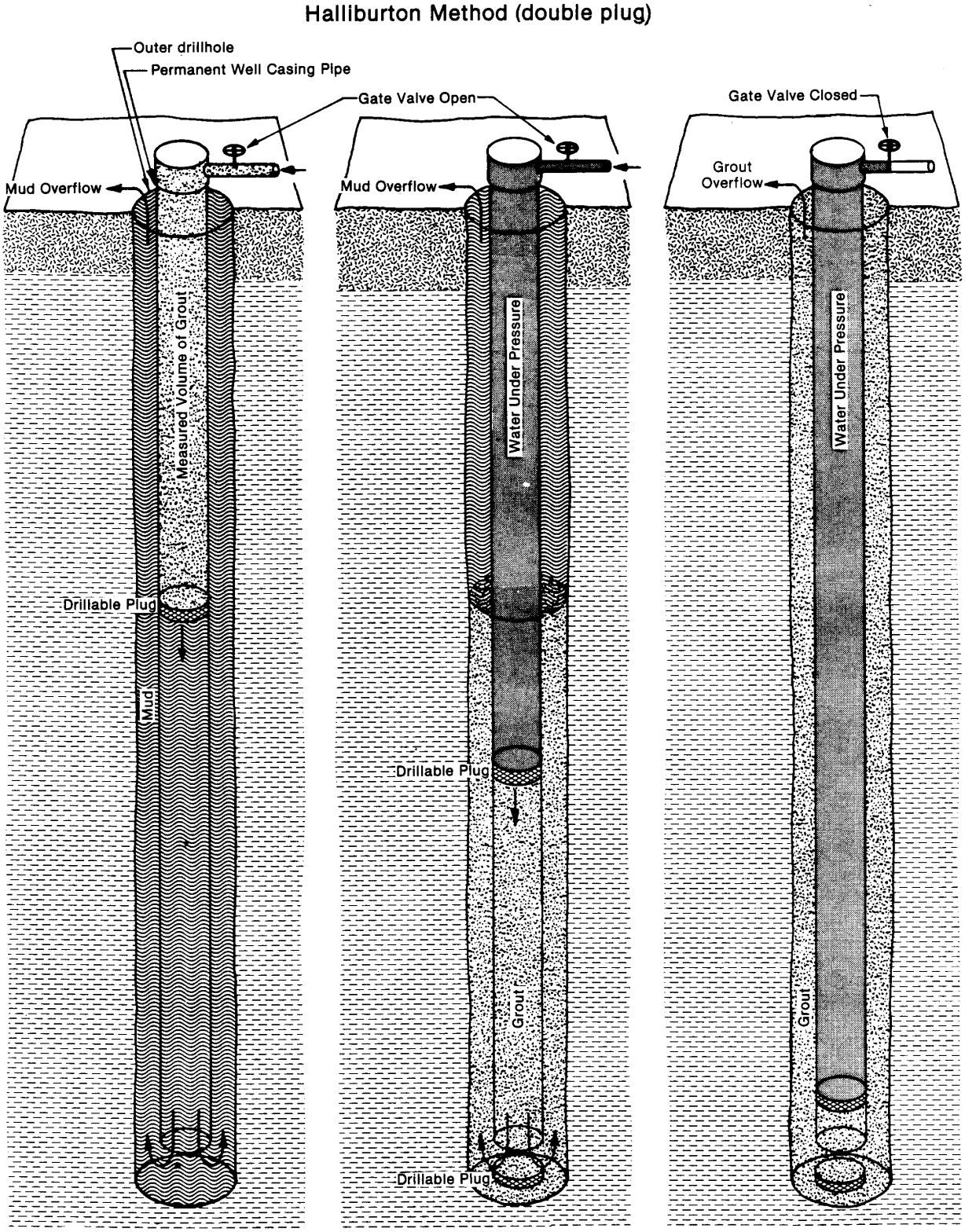

Figure 15. Halliburton (double plug) method for neat cement grouting.

Removed by Register March 2015 No. 711. For current adm. code see: http://docs.legis.wisconsin.gov/code/admin_code.

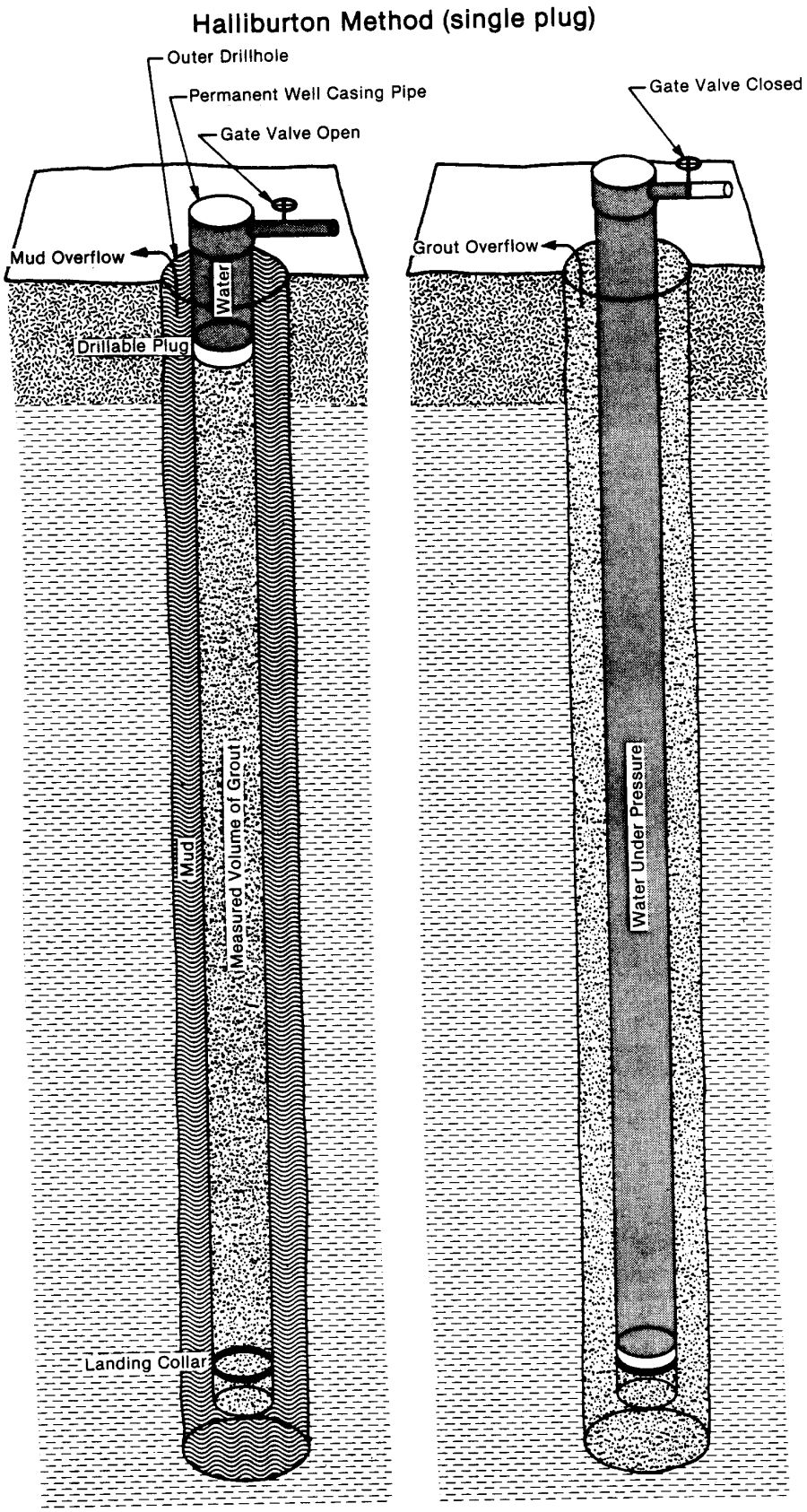

Figure 16. Halliburton (single plug) method for neat cement grouting.

Removed by Register March 2015 No. 711. For current adm. code see: http://docs.legis.wisconsin.gov/code/admin_code.

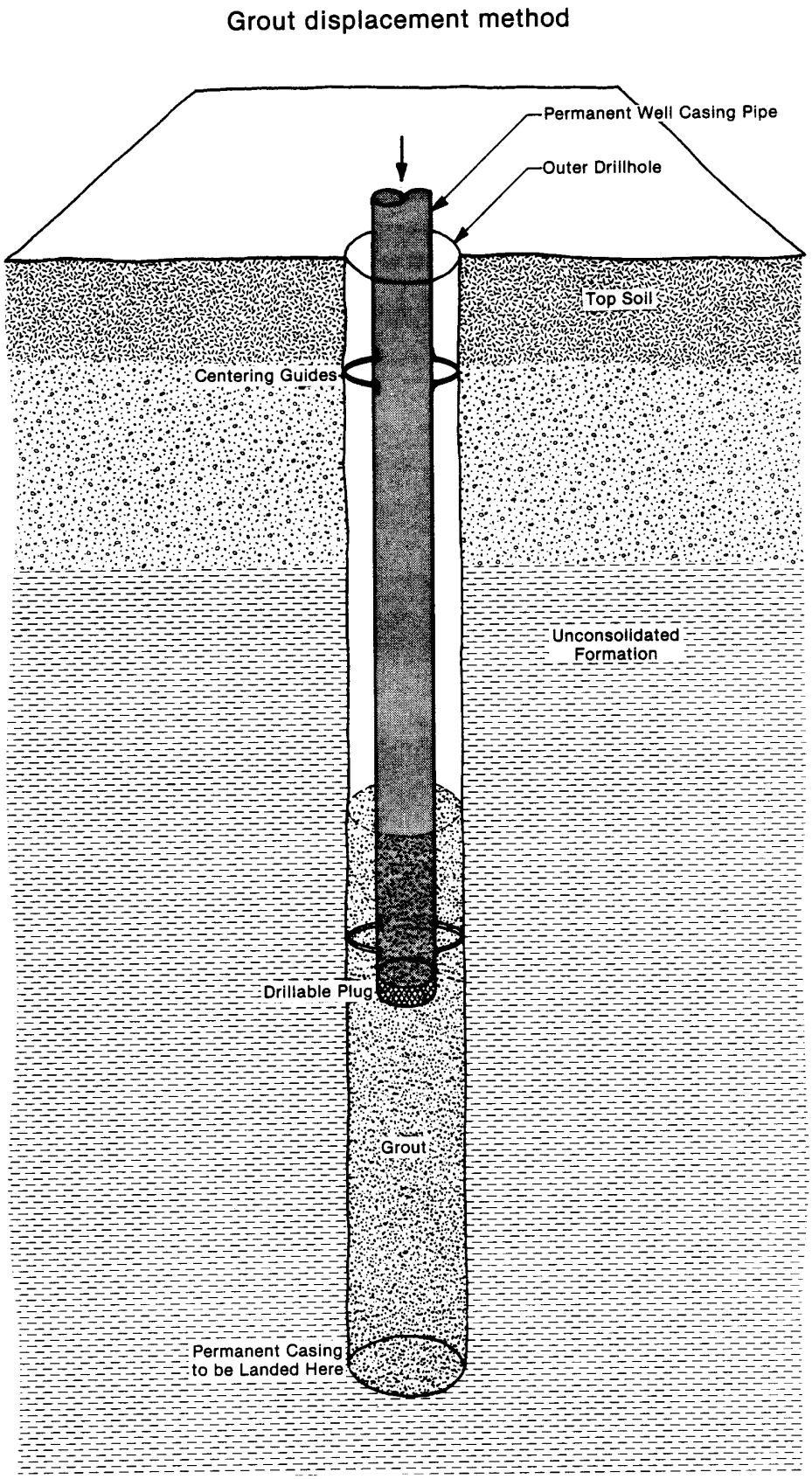

Figure 17. Grout displacement method for neat cement grouting.

Removed by Register March 2015 No. 711. For current adm. code see: http://docs.legis.wisconsin.gov/code/admin_code.

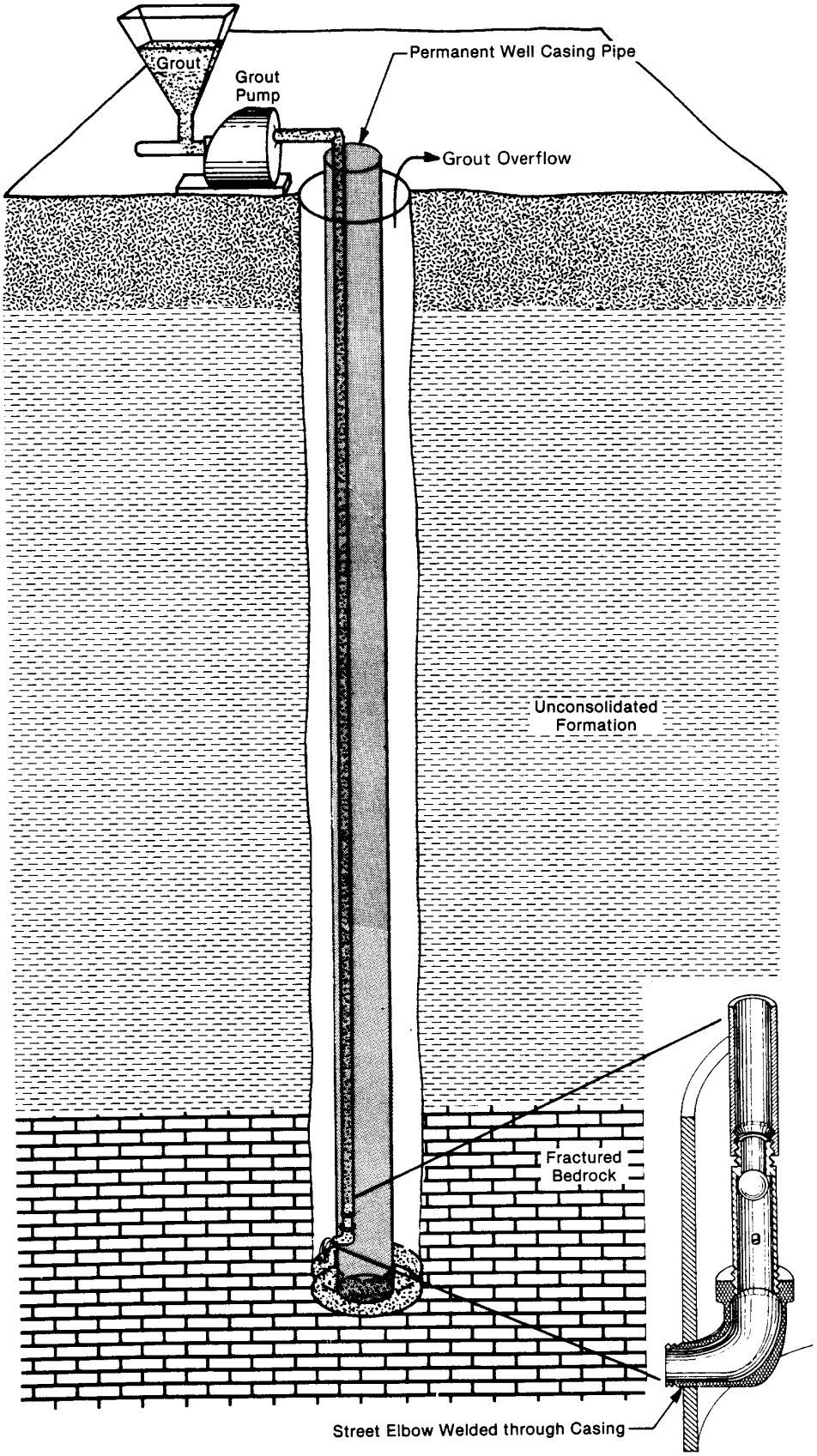

Figure 18. Street elbow method for neat cement grouting.

Removed by Register March 2015 No. 711. For current adm. code see: http://docs.legis.wisconsin.gov/code/admin_code.

(h) *Street elbow method.* As depicted in figure 18, a small diameter hole is cut through the wall of the well casing pipe near the bottom of the string of well casing pipe. A street elbow is welded watertight through this hole. The male end of the street elbow extends out into the annular space. A ball check valve is threaded into the female end of the street elbow inside the well casing pipe. The top threads on the check valve are "left−handed". A string of conductor (tremie) pipe is threaded into the top of the check valve. The entire string of well casing pipe and conductor pipe are set to the bottom of the upper enlarged drillhole. The grout is pumped down through the conductor pipe and up into the annular space. The grout must flow at the surface with the same consistency as the grout entering the conductor pipe. Immediately following grouting, the conductor pipe is screwed out of the left−hand thread of the check valve and removed. The check valve prevents the grout from moving back inside the well casing pipe. After the grout has set, the drill stem is lowered to the bottom of the inside of the well casing pipe to knock the street elbow off the well casing pipe before well construction continues.

(4) SODIUM BENTONITE WATER SLURRY PLACEMENT METHODS. When neat cement grout is not required in Tables I to IV and is not to be used, the annular space between any upper enlarged drillhole and the well casing pipe shall be sealed as follows:

(a) When percussion methods are used, following completion of the driving of the well casing pipe, a clay or sodium bentonite and cuttings slurry with a mud weight of at least 11 pounds per gallon shall be placed to permanently fill and seal the annular space. Any subsidence shall be made up. If the upper enlarged drillhole extends below the 40−foot depth, the slurry shall be placed with a conductor pipe.

(b) When rotary methods are used, after the upper enlarged drillhole has been completed by circulating drilling mud, the slurry coming out the top of the annular space shall have a mud weight of at least 11 pounds per gallon before the well casing pipe is set in the drillhole. Any subsidence of the drilling mud and cuttings in the annular space shall be made up. The annular space shall remain filled and sealed up to the ground surface. The rotary method of circulating drilling mud during construction described in this paragraph is an approved pressure method for placing sodium bentonite slurry or drilling mud and cuttings and shall be used when required in Tables I to IV and ss. NR 812.13 to 812.15.

History: Cr. Register, January, 1991, No. 421, eff. 2−1−91; am. (3) (c), (4) (a) and (b), Register, September, 1994, No. 465, eff. 10−1−94; **CR 13−096: cr. (1) (a) 7., am. (1) (c), (d), cr. (1) (e) to (h), am. (2) (c), (j), (3) (a), (b) Register September 2014 No. 705, eff. 10−1−14.**

NR 812.21 Liners. Only new steel or thermoplastic well casing pipe as specified in s. NR 812.17 may be used for liner pipe.

(1) LINERS INSTALLED TO CORRECT CONTAMINATED WATER SUPPLIES, TO LINE−OFF THE VERTICAL ZONE OF CONTAMINATION, OR TO PREVENT CROSS−MIGRATION BETWEEN AQUIFERS. Liner pipe installed in a well with water containing contaminant levels exceeding the drinking water standards of s. NR 812.06, except turbidity, may be either steel or thermoplastic pipe and shall meet the specifications of s. NR 812.17 and have a nominal diameter at least 2 inches smaller than the nominal diameter of the permanent well casing pipe or the diameter of the drillhole. If the liner pipe has threaded and coupled joints the outside diameter of the couplings shall be 2 inches smaller in diameter than the nominal diameter of the original well casing pipe or the diameter of the drillhole.

(a) The liner pipe shall have a set of at least 3 centering guides at least every 40 feet and they shall be installed so as to not restrict the flow of grout sealing material. A minimum of 2 sets of guides shall be provided, one at the top and one at the bottom of the liner.

(b) When the liner pipe does not extend to the bottom of the well, a flange or approved packer shall be provided at the bottom of the liner between the outside of the liner and the inside of the drillhole or the inside of the well casing pipe, or the liner shall rest on backfill material to be later drilled or bailed out.

(c) The liner pipe should extend to the ground surface but shall extend at least to the bottom of the pitless adapter when one is used.

(d) The liner pipe shall be completely sealed in place from the bottom of the liner to the top of the liner with neat cement grout using an approved pressure method according to the grouting requirements of s. NR 812.20. If the liner pipe is thermoplastic, the cement grout thickness may not exceed 1−1/2 inches. The liner shall be supported until the grout has set.

(e) Sealing a drillhole with neat cement grout or concrete and subsequently drilling through this material may not be used to reconstruct a well with water containing contaminate levels exceeding the drinking water standards of s. NR 812.06, except turbidity.

(f) Liners may only be used to reconstruct existing wells cased with stove pipe casing if:

1. The stove pipe casing is removed and the drillhole is maintained at full diameter before the liner pipe is set and grouted in place, or

2. The existing stove pipe casing and drillhole is completely clear of obstructions to the depth of liner pipe setting.

(2) LINERS INSTALLED FOR CAVING OR SLOUGHING PROTECTION, FOR A NON−HEALTH−RELATED WATER QUALITY PROBLEM OR FOR A TURBIDITY PROBLEM. (a) A liner pipe shall be installed when the following conditions exist:

1. A caving or sloughing formation is encountered in drilling or subsequent to well completion and causes interference with the proper functioning of the well or pumping equipment; or

2. The well produces turbid water or pumps sand after unsuccessful attempts at redevelopment.

(b) Liner pipe used only to seal off a caving or sloughing zone, for a non−health−related water quality problem or to prevent turbid water may be either steel or thermoplastic meeting the requirements of s. NR 812.17. Steel liner pipe may have a lesser wall thickness than is required in Table V for the diameter of well casing pipe but shall have a wall thickness of at least 0.216 inches. When thermoplastic pipe is used and is sealed in place with cement grout, the grout thickness may not exceed 1−1/2 inches.

(c) Liner pipe installed for the reasons cited in par. (b) may have the largest practical diameter allowing installation in the well.

(d) The liner pipe shall extend at least 10 feet above the static water level or packers shall be installed far enough above and below the caving zone to prevent further entrance of material into the well. When the liner pipe does not extend to the bottom of the well, the liner pipe shall be supported on the bottom and top with a pipe flange or packer installed between the outside of the liner and the inside of the drillhole.

(e) Sealing a drillhole with neat cement grout or concrete grout and subsequently drilling through the hardened grout may be used to reconstruct a well with water containing contaminant levels not exceeding the drinking water standards of s. NR 812.06 for non−health−related water quality problems or for turbidity problems.

History: Cr. Register, January, 1991, No. 421, eff. 2−1−91; am. (intro), (1) (d), (2) (b), (c) and (e), Register, September, 1994, No. 465, eff. 10−1−94.

NR 812.22 Finishing operations. (1) DEVELOPMENT. All wells shall be developed until the water is practicably clear and free of sand by one of, or a combination or modification of, the following methods:

(a) *Mechanical surging.* A valved or solid plunger surge block may be used to create a surging action in the well. Accumulated material shall be removed periodically. A bailer may be used as the surge block but is usually not as effective.

(b) *Air surging.* An air compressor and piping may be used to create the surging and jetting action in the well. Water in the well shall be alternately brought to the surface by air lift pumping and allowed to drop back down the well to static condition by shutting

Removed by Register March 2015 No. 711. For current adm. code see: http://docs.legis.wisconsin.gov/code/admin_code.

the air off. This may be performed with an air−rotary drilling rig and drill stem.

(c) *Overpumping*. Continuous overpumping at a rate of at least 1 and 1/2 times the design capacity of the well or interrupted overpumping in conjunction with water line drainback to the well in 5−minute cycles may be used. Overpumping alone without a drainback provision or other surging method may not be used to develop screened wells.

(d) *Hydraulic jetting*. A nozzled jetting tool may be used to deliver water at high pressure and velocity to the zone being developed in conjunction with pumping the well.

(e) *Air−jetting*. Use the same technique as hydraulic jetting described in par. (d) except with the use of air rather than water.

(2) RECONDITIONING. (a) *Redevelopment*. The methods described for development in sub. (1) may be used to redevelop a well.

(b) *Chemical conditioning*. 1. Noncontinuous chemical treatment of a well, except for batch chlorination, shall be conducted under the supervision of a licensed well driller or a Wisconsin registered professional engineer. Acidation of a well shall be done with approved materials and in a manner to prevent damage to the well or pump and to prevent any hazard to humans or property. The acid shall be inhibited and shall be neutralized upon removal from the well.

2. Noncontinuous chemical treatment of pumps or pump intake screens shall be conducted under the supervision of a licensed pump installer or a Wisconsin registered professional engineer. Acidation of a pump or pump intake screen shall be done in a manner described in subd. 1.

(c) *Physical conditioning*. Wells may be physically conditioned by:

1. Blasting. When using explosives to increase or recover the yield of a well, the explosive charge shall be set at least 10 feet below the bottom of the well casing pipe which shall be filled with water or sand. The work shall be performed under the supervision of a well driller by a blaster certified by department of safety and professional services according to the requirements of ch. SPS 307. The well driller shall submit a report of results of the blasting within 30 days following blasting on a well construction report form.

2. Hydrofracturing. Hydraulic fracturing or hydrofracturing of an aquifer by injecting potable chlorinated water into a crystalline bedrock formation well under high pressures great enough to separate the aquifer along bedding planes, joints and fractures is allowed. Clean washed inert, nontoxic material such as sand may be added to the water for the purpose of holding the joints and fractures open after the pressure is reduced. Hydrofracturing may only be performed under the supervision of a well driller. The upper packer may not extend up into the bottom of the well casing pipe nor higher than 40−feet below the ground surface. Hydrofracturing in limestone or dolomite formations may be undertaken only with prior department notification. The well driller shall submit a report on a well construction report form to the department of the results of the hydrofracturing within 30 days following completion.

(3) WELL PUMP TEST. The well driller or well constructor shall conduct a pump test using the well driller's, the well constructor's or the well owner's pump for each new or reconstructed well to determine the stable yield in gallons per minute, and the water level drawdown. A pump test may be conducted using air−rotary equipment. For flowing wells, the flow rate may be measured using an orifice plate with manometer or equivalent. The static water level and drawdown shall be measured in a stilling pipe when the flow is not adequate for user needs.

Note: A stable pumping water level may not be possible in wells completed in crystalline bedrock.

(4) WELL DISINFECTION AND BATCH CHLORINATION. Wells shall be thoroughly disinfected following completion of construction or reconstruction using a chlorine solution such as a sodium or calcium hypochlorite solution. Chlorine compounds having special additives shall not be used.

(a) The disinfectant shall be dispersed throughout the entire water column in the well. The disinfectant shall also be brought into contact with the inside of the well casing pipe above the static water level.

(b) The disinfectant shall remain in the well for at least 2 hours except for emergency situations, when water is needed without delay. A contact time of at least 30 minutes shall be provided for emergency situations.

(c) A chlorine solution with a minimum of 100 mg/l of chlorine shall be used to disinfect wells and well drilling equipment.

(d) The disinfectant shall be prepared according to the following table:

Table B

Needed Chlorine Concentration	Quarts sodium hypochlorite (common household bleach) per 100 gallons of water (5% available chlorine)	Pounds dry calcium hypochlorite tablets per 100 gallons of water. (Approx. 70% available chlorine)
100 mg/l	0.7 quarts	0.14# (approx. 3 oz.)
200 mg/l	1.4 quarts	0.30# (approx. 5 oz.)
300 mg/l	2.2 quarts	0.40# (approx. 7 oz.)
400 mg/l	2.9 quarts	0.50# (approx. 8 oz.)
500 mg/l	3.6 quarts	0.60# (approx. 10 oz.)

Note: mg/l means milligrams per liter (parts per million).

Volume of standing water in well:
2″ diameter: 0.17 gallons per foot
4″ diameter: 0.66 gallons per foot
5″ diameter: 1.04 gallons per foot
6″ diameter: 1.50 gallons per foot
8″ diameter: 2.60 gallons per foot

(e) For batch chlorination, the entire water system shall be thoroughly disinfected with a chlorine solution having a concentration of at least 500 mg/1 prepared according to Table B. The volume of chlorine solution shall be equal to or greater than the volume of water standing in the well. The chlorine solution shall be brought into contact with the entire inside of the well casing pipe by continuous circulation from the water system. A contact time of at least 12 hours shall be provided for the disinfectant.

(5) FLUSHING. Wells shall be thoroughly flushed after disinfection. Flushing and disinfection procedures may be performed simultaneously except for batch chlorination procedures when they shall be done separately.

(6) BACTERIOLOGICAL, NITRATE, AND SPECIAL WELL CASING DEPTH AREA WATER SAMPLES. (a) The water well driller or his or her agent or the well constructor of any potable well, including driven point wells, shall collect water samples to be analyzed for coliform bacteria and nitrate, using the well driller's, well constructor's or well owner's pump, air−lift equipment or with a bailer, from any new or newly reconstructed, rehabilitated, redeveloped, or reconditioned potable well. Thereafter water samples for coliform bacteria and nitrate shall also be collected after the well is entered for the purpose of measuring or diagnosing any feature or problem with the well or for the purpose of installing, replacing or repairing any equipment located within the well or

Removed by Register March 2015 No. 711. For current adm. code see: http://docs.legis.wisconsin.gov/code/admin_code.

when the casing height is raised. The water samples shall be collected and submitted for analysis no later than 30 days following completion of the well or following completion of any work described above. The well is completed when all operations that require the use of drilling, driving or annular space sealing equipment have been completed. If the water well driller uses the well owner as an agent to collect the water samples, the well driller shall provide the owner with a laboratory designated sample bottle and department specified form. The information submitted on the form shall be complete, true and accurate. If the water well driller uses the pump installer as an agent to collect the water samples, and the pump installer engages in the business of pump installing separately from the water well driller's business, the water samples from each business shall be in separate bottles and each must be submitted to the laboratory with their own department specified forms. Regardless of whether the water well driller delegates the collection and submission of the samples for analysis, the ultimate responsibility to ensure that these tasks are completed belongs to the water well driller. If the water well driller or well constructor is also the pump installer for that well, one set of water samples may be collected following the completion, disinfection and flushing after the pump installation. A water well driller or well constructor is not required to be licensed as a pump installer to install a test pump for well development and water sampling.

(b) The water sample shall be analyzed for coliform bacteria by a laboratory certified by DATCP under ch. ATCP 77 to perform coliform bacteriological analysis of drinking water and having an agreement with the department for electronic submission of laboratory test reports to the department no later than 30 days after completion of the analysis, or be analyzed by the Wisconsin state laboratory of hygiene. The water sample shall also be analyzed for nitrate by a laboratory certified by the department for nitrate analysis of drinking water and having an agreement with the department for electronic submission of laboratory test reports to the department no later than 30 days after completion of the analysis or be analyzed by the Wisconsin state laboratory of hygiene. The certified laboratory and water well driller or well constructor or their agent shall use forms specified by the department.

(c) For any water sample required in a Special Well Casing Depth Area, the analysis shall be performed by a laboratory certified by the department for that analysis and having an agreement with the department for electronic submission of laboratory test reports to the department no later than 30 days after completion of the analysis, or be analyzed by the Wisconsin state laboratory if hygiene. The certified laboratory and water well driller or well constructor or their agent shall use forms specified by the department.

(d) If the laboratory test report indicates that any test result is invalid for any reason, including improper sample bottle, improper collection technique or longer than 48 hours between sample collection and arrival at the laboratory, the water well driller is required to collect replacement samples no later than 30 days after receiving the invalid test report.

(e) The water well driller, well constructor or pump installer shall provide the well owner or the owner's agent with a copy of each laboratory test report no later than 10 days after the well driller's, well constructor's, or pump installer's receipt of the laboratory test reports.

(7) WELL AND DRILLHOLE CONSTRUCTION REPORTS. (a) The water well or heat exchange driller who contracted to construct the water well or heat exchange drillhole, the water well or heat exchange driller who actually constructed the water well or heat exchange drillhole, or the water well or heat exchange drillhole constructor shall submit an original well construction report to the department and to the owner within 30 days following the day the water well or heat exchange drillhole was completed or reconstructed. Heat exchange drillholes require one well construction report for every 20 drillholes drilled, and the well construction report shall include the latitude and longitude of the corresponding drillhole location. Latitude and longitude for each drillhole at a project site shall be reported for heat exchange projects requiring approval under s. NR 812.09 (4). Heat exchange drillhole construction reports shall be spaced across the project site as practicable as possible, or should be reflective of geologic variation that may occur across the site. A well construction report shall be submitted for any well deepening. A water well or heat exchange drillhole is completed when all operations that require the use of drilling, driving or annular space sealing equipment have been completed. A well construction report is not required for well screen replacement if the screen is set to a depth not exceeding 5 feet above or below the original screen depth setting. A well construction report is also not required for blasting or hydrofracturing when done within 30 days after original completion of the well construction. Such work shall be reported on the original well construction report or on a copy of the original report. An accurate and complete well construction report shall be submitted on a form prescribed by the department to:

1. Department of natural resources; and
2. The well owner

Note: The department's address is P.O. Box 7921, Madison, WI 53707

(b) Well or heat exchange drillhole construction reports returned to the water well driller, heat exchange driller or well constructor for completion or when compliance with the construction requirements of this chapter is questionable shall be resubmitted to the department no later than 15 days after receipt of the returned report. The original well or heat exchange drillhole construction report shall be resubmitted. Dry drillholes or unsuccessful wells drilled in conjunction with well construction and not immediately filled and sealed shall be reported on a well construction report. The water well driller, heat exchange driller, or well constructor shall ensure proper filling and sealing methods and materials are used, according to s. NR 812.26, for any drillhole constructed by the water well driller or well constructor that is not intended to provide water.

(8) WELL CONDITIONING REPORTS. The well driller, well constructor or project supervisor shall, within 30 days following any well blasting, hydrofracturing or chemical treatment operation conducted under an approval, submit a report to the department detailing the methods used and results achieved.

(8m) HEAT EXCHANGE FLUIDS. Only department approved heat exchange fluids may be used in the piping placed in heat exchange drillholes.

(9) WELL NOTIFICATION REPORT VERIFICATION. A well driller or well constructor shall either obtain a Well Notification or verify that the well owner has obtained a department Well Notification including the Notification Number, by obtaining a copy of the notification report, before the well construction operation is started.

(10) WELL CASING PIPE DEPTH VERIFICATION. When required to measure well casing pipe depth, due to lack of a confirmable well construction report, the well driller shall enter the well details, including location, well casing pipe depth, total well depth, distances to possible contaminant sources and well owner information on a form specified by the department and shall submit the report to the department no later than 30 days after performing the verification. A copy of the report shall also be provided to the well owner no later than 30 days after performing the verification.

History: Cr. Register, January, 1991, No. 421, eff. 2−1−91; am. (2) (b) 1., (4) (a) and (b), (5), (6) (a) and (7) (a) (intro.), cr. (4) (e), Register, September, 1994, No. 465, eff. 10−1−94; correction in (2) (c) 1. made under s. 13.93 (2m) (b) 7., Stats., Register, September, 1996, No. 489; correction in (2) (c) 1. made under s. 13.93 (2m) (b) 7., Stats., Register, May, 2000, No. 533; correction in (6) (b) made under s. 13.92 (4) (b) 7., Stats., Register July 2010 No. 655; correction in (2) (c) 1., (6) (b) made under s. 13.92 (4) (b) 6., 7., Stats., Register December 2011 No. 672; **CR 13−096: am. (7) (title), (a) (intro.), (b), cr. (8m), CR 13−099: am. (7) (b), cr. (9), (10) Register September 2014 No. 705, eff. 10−1−14; correction in numbering in (8m) made under s. 13.92 (4) (b) 1., Stats., Register September 2014 No. 705.**

NR 812.23 Driven point (sand point) wells. Driven point wells are typically constructed in sandy soil areas with a high

Removed by Register March 2015 No. 711. For current adm. code see: http://docs.legis.wisconsin.gov/code/admin_code.

water table. Groundwater in these areas is very susceptible to contamination. Driven point wells shall be constructed to meet the following requirements:

(1) The well shall be located on the highest point on the premises consistent with the general layout and surroundings, if reasonably possible, as specified in s. NR 812.08 (1) (b) and as far removed as possible from all potential contamination sources, but at least as far as the minimum separating distances required in s. NR 812.08.

(2) Well casing pipe used for driven point wells shall meet the requirements of s. NR 812.17.

(3) The well drive pipe shall extend 12 inches above the established ground surface, pump house or building floor, or above any concrete or asphalt platform surrounding the well at or above the established ground surface. In a floodfringe, the top of the well drive pipe shall terminate at least 2 feet above the regional flood elevation. Driven point wells may not be constructed in a floodway.

(4) The diameter of the driven point well shall be selected and the expected depth considered so that the pump installation will meet the requirements of this chapter. For static water levels deeper than the lift of a shallow well pump, approximately 20 feet, a well drive pipe diameter sufficient to accommodate the packer–jet assembly in the well shall be selected to allow pumping with a deep well pump. When the requirements of sub. (5) are met and when the use of a shallow well pump is possible the minimum diameter of the driven point well is 1−¼ inches.

(5) The well drive pipe, not including the screen, of a driven point well shall extend to a depth of 25 feet or to a depth 10 feet below the static water level in the well, whichever is greater.

(6) Driven point wells, when protected against freezing, may be installed with a protective outer sleeve below frost depth as shown in figure 18a. When installed in this manner, the top of the annular space between the well and the protective sleeve shall be sealed watertight with a sanitary well seal.

(7) Pump installations for driven point wells shall be completed according to s. NR 812.32.

(8) When a well drive pipe is removed to replace a well screen, the replacement is new well construction and shall meet all the requirements of this chapter.

(9) Screen selection for driven point wells is optional, except that screens having any lead content may not be used.

(10) Starter drillholes not exceeding 10 feet deep may be constructed to facilitate driving the pipe. If a starter drillhole is constructed the annular space shall be sealed according to the percussion drilling methods specified in s. NR 812.13 (2) following completion. An attempt shall be made to remove any temporary outer casing. If possible, the temporary outer casing shall be removed.

History: Cr. Register, January, 1991, No. 421, eff. 2−1−91; am. (4) and (6), Register, September, 1994, No. 465, eff. 10−1−94.

NR 812.24 Dug type well design and construction. Because dug wells often pose a safety hazard and a threat to groundwater quality, the department discourages their construction. Dug wells may not be constructed without written approval. When approved, they shall be constructed to meet the following requirements:

(1) CURBING WALL. The curbing wall of a dug well shall be concrete or steel and watertight to a depth of at least 2 feet below the vertical zone of contamination, but not less than 25 feet below the established ground surface. The curbing wall through the intake area shall be of adequate strength to withstand any external pressure to which it may be subjected and shall be seated firmly enough to prevent settling.

(a) *Concrete curbing wall.* The curbing wall shall be circular and at least 6 inches thick with concrete placed so as to be free from voids. The concrete mixture shall conform to provisions of s. NR 812.20 (1). The curbing wall shall be reinforced vertically and horizontally with 3/8−inch rods on 12−inch centers. Rods shall lap 12 inches and be staggered, but the lap may not occur at construction joints. The curbing wall should be poured in one operation. There may not be a construction joint within 10 feet of the ground surface. Construction joints shall be left rough and shall be washed and brushed with neat cement grout before pouring of concrete is continued, if possible.

Removed by Register March 2015 No. 711. For current adm. code see: http://docs.legis.wisconsin.gov/code/admin_code.

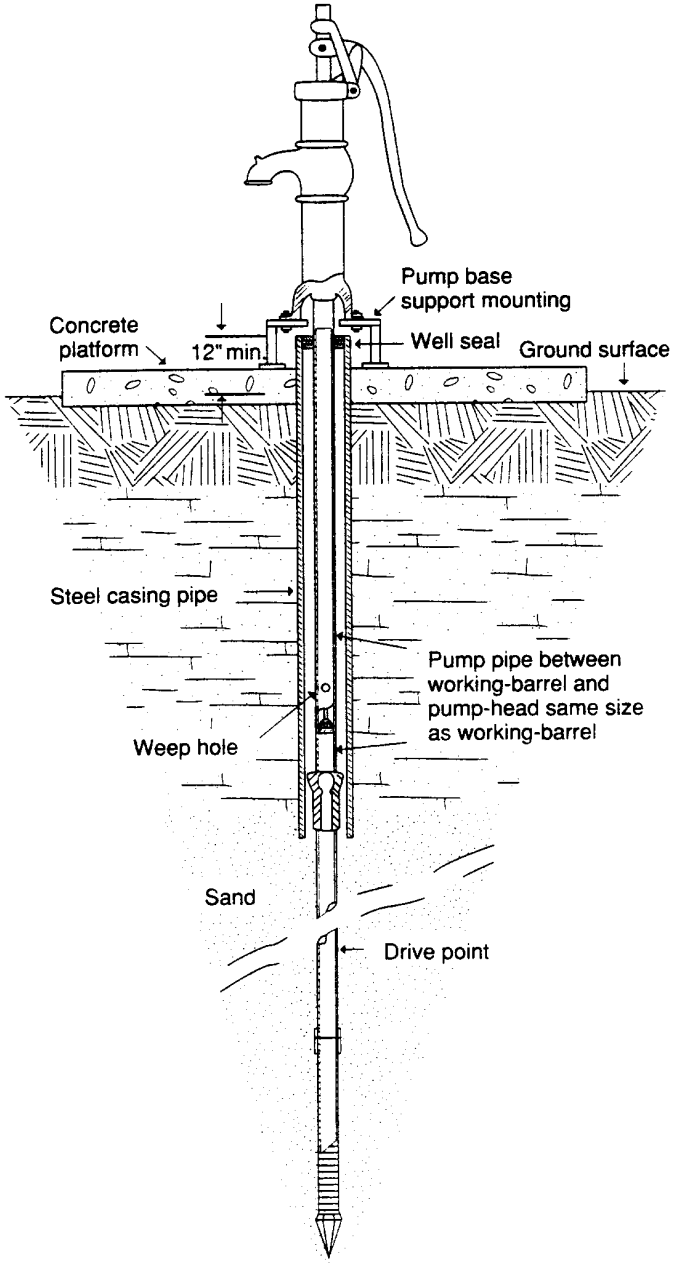

Figure 18a. Hand pump installation protected from frost with outer casing and drainback mechanism.

(b) *Steel curbing wall.* A steel curbing wall shall have a thickness of at least 1/4 inch thick and assembled with welded joints.

(c) *Curbing wall installation.* The curbing wall shall be constructed at the surface and carried down by excavating from the interior. If wood forms are used on the exterior of a concrete curbing wall, they shall be removed before the curbing is lowered. Exterior wood forms may not be used below the ground surface. Metal forms may be left in place.

(d) *Annular opening.* The opening between the face of the excavation and the curbing wall through the vertical zone of contamination shall be filled with clean clay slurry.

(e) *Upper terminal.* The curbing wall shall extend at least 12 inches above the established ground surface. The ground shall be graded up around the curbing wall to a height of at least 6 inches above the ground surface so surface water will flow away from the well.

(2) DUG WELL COVER. The cover of the well curbing shall be made of reinforced watertight concrete at least 5 inches thick and of a diameter large enough to overlap the curbing wall by at least 2 inches. A drip groove shall be provided within one inch of the outer edge of the underside of the cover. The cover shall be free from joints. A pump installation access sleeve comprising a section of steel well casing pipe conforming to s. NR 812.17 (2) shall be installed in the cover at the time of pouring the concrete to fabricate the cover and shall terminate at least 12 inches above the top of the cover. The top of the cover shall be sloped to drain away from the access sleeve. A manhole, if installed, shall be provided with a 4−inch high metal curb which shall be equipped with an overlapping metal cover, the sides of which extend downward at least 1−1/2 inches. A tight joint shall be provided between the top of the curbing and the cover using a nontoxic plastic sealing compound. The manhole cover shall be locked or bolted in place to

Removed by Register March 2015 No. 711. For current adm. code see: http://docs.legis.wisconsin.gov/code/admin_code.

prevent entrance of water and to be safe from vandalism and accidents.

(3) EQUIPMENT LOCATION. All pump piping, including the pump discharge or suction pipe, shall extend watertight through an access sleeve in the dug well cover.

History: Cr. Register, January, 1991, No. 421, eff. 2–1–91.

NR 812.25 Springs. The unprotected nature of springs subjects them to wide fluctuations in water quality. The department discourages their use as a source of potable water.

(1) Springs vary from the standpoint of sources, locations, surrounding land uses and elevation. Each spring considered for use as a source of potable water shall be evaluated by the department prior to use as a potable source. Development of a spring as a source of potable water will be approved only after a department evaluation and approval. The placement or driving of a casing pipe into an undeveloped spring in a location easily accessible to the public regardless of the intended use of the spring water is prohibited.

(2) Water supplies using springs as a source of water shall meet the following requirements:

(a) *Location.* 1. The area surrounding the spring to a distance of at least 100 feet laterally and 50 feet downgrade and the area immediately upslope from the spring to a point beyond the crest of the slope or to a distance of at least 200 feet upslope from the spring, may not be used for any activity, including human habitation, which may contaminate the spring.

2. The spring outlet shall be at least 2 feet above the regional flood water level.

3. The spring water shall flow from an underground source having enough overburden so that a horizontal plane extending back into the slope of the hill 100 feet will be at least 25 feet below the ground surface.

4. The spring shall meet the distance separation requirements from potential contamination sources as specified in s. NR 812.08.

(b) *Construction.* The spring outlet shall be completely protected against the entrance of surface water runoff, insects, rodents and contaminants.

1. As depicted in figure 19, a poured concrete box structure reinforced with 3/8 inch bars each way shall be constructed to house the spring outlet. This spring box shall meet the following minimum construction requirements:

a. Five–inch thick walls and roof with no cracks or holes, except for the overflow pipe in the wall and the access openings in the roof,

b. A width of 4 feet, with a 24–square foot cross section,

c. A 20–inch diameter round, or a 20–inch square access opening in the roof with a 4–inch thick concrete curbing wall that extends 8 inches above the roof,

d. An overlapping, tight–fitting, shoebox–type cover with 4–inch high skirted sides, constructed from welded sheet steel, to cover the access opening,

e. A 4–inch diameter or larger steel pipe sleeve, comprising a section of well casing pipe conforming to s. NR 812.17 (2) extending through the roof to a point at least 12 inches above the roof for the passage of the pump suction and discharge pipe or a service pipe from a pressure tank. The steel pipe sleeve shall be provided with a one–piece top plate sanitary well seal, and

f. An overflow pipe with a screened outlet that terminates at least 2 pipe diameters above the maximum water level at its discharge point.

2. Buried discharge pipe from the spring, from a pump or any service pipes from a pressure tank shall be maintained under positive gauge pressure at all times.

3. When the pump, pressure tank, or both, are installed above the spring outlet box, an insulated housing shall be provided for frost protection.

(c) The spring shall be capable of producing water that is continuously free from coliform bacterial contamination and free of contaminants in excess of the drinking water standards in s. NR 812.06.

History: Cr. Register, January, 1991, No. 421, eff. 2–1–91; am. (1) and (2) (a) 1., Register, September, 1994, No. 465, eff. 10–1–94.

NR 812.26 Well and drillhole filling and sealing. **(1)** PURPOSE. The filling and sealing of noncomplying, unused, abandoned, or contaminated wells or drillholes and noncomplying water systems is an important step in the protection of the local groundwater quality. Wells or drillholes, especially those with structural defects, may act as conduits for the vertical movement of contamination from or near the ground surface into the groundwater or from one aquifer to another.

(2) CRITERIA FOR FILLING AND SEALING. (a) The well owner shall hire a registered water well drilling or pump installing business or licensed water well driller or pump installer to fill and seal a well or a drillhole under any of the following conditions:

1. The well water is contaminated with biological agents, bacteriological, viral or parasitic and 3 attempts at batch chlorination by a licensed or registered water well driller or pump installer fail to eliminate the problem.

2. The well or drillhole poses a hazard to health or safety, or to groundwater,

3. The well or drillhole construction or well location does not comply with the minimum standards of this chapter, or

4. No later than 90 days after the well or drillhole has been removed from service. The 90–day time period in this subdivision does not apply to seasonal water systems or to high capacity irrigation wells.

5. The well construction is noncomplying.

5m. The heat exchange drillhole will not be used as part of the heat exchange system.

6. The pump installation is not operational or it does not comply with the requirements of this chapter.

(b) The department may require the well owner to hire a registered water well drilling business or a licensed individual water well driller or a registered pump installing business or a licensed individual pump installer to fill and seal a well or drillhole under the following conditions:

1. The well water is contaminated with a substance in exceedence of the drinking water standards specified in s. NR 812.06.

2. The well or heat exchange drillhole was not constructed by the well owner or by a licensed water well or heat exchange driller or registered water well drilling business.

(c) A water well driller or well constructor shall, no later than 30 days after receiving notice from the department, fill and seal a well or drillhole, which the individual constructed or reconstructed, under the following conditions:

1. The well or heat exchange drillhole construction or location does not comply with the minimum standards of this chapter at the time the well or heat exchange drillhole was constructed, or

2. The drillhole is an unsuccessful attempt to construct or reconstruct a well.

(d) The department may require any person who has filled and sealed a well, with a method, material or in a manner not in compliance with this section, to hire a registered water well drilling business or licensed individual water well driller or a registered pump installing business or a licensed pump installer to take corrective action so that the well is filled and sealed in a complying manner.

(3) REQUIREMENTS FOR WELLS REMOVED FROM SERVICE. Any well or drillhole removed from service shall be properly filled and

Removed by Register March 2015 No. 711. For current adm. code see: http://docs.legis.wisconsin.gov/code/admin_code.

sealed according to the criteria and procedures in this section except as exempted by s. NR 123.23 (3) (c). Any well or drillhole removed from service shall be properly filled and sealed prior to any demolition or construction work on the property. A well driller or well constructor who removes a well from service or constructs a replacement well on a property shall inform the property owner that the department requires that any well replaced or removed from service to be filled and sealed according to the requirements of this section no later than 90 days after the well was removed from service or 90 days after the completion of the replacement well. A well driller or well constructor shall report, on the well construction report, any well he or she removes from service for any replacement well he or she constructs on the property.

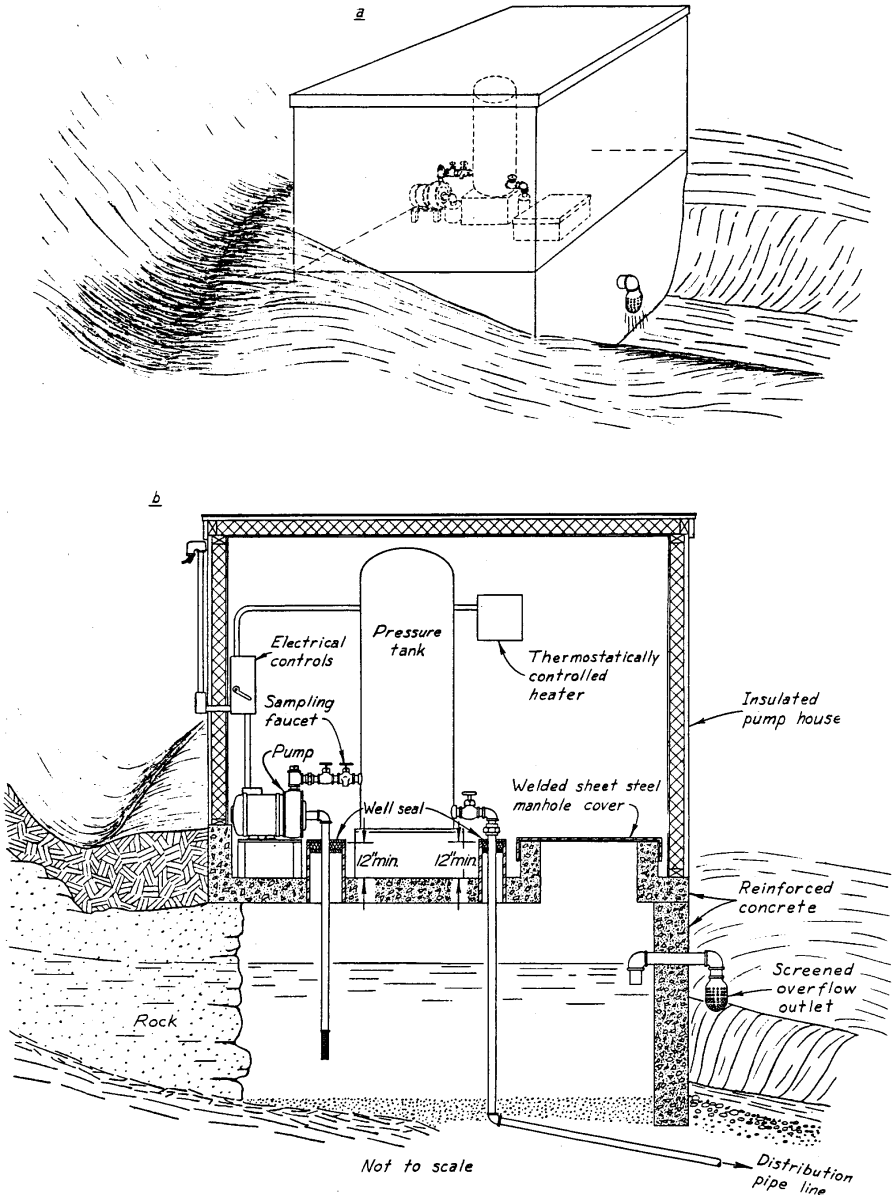

Figure 19. Specifications for spring boxes.

(5) WELL OR DRILLHOLE CASING PIPE. The well casing pipe or drillhole casing pipe shall be left in place when a well or drillhole is filled and sealed, except under par. (a), (b), (c), or (d) and only if the well or drillhole is completely filled and sealed with the sealing material as the well casing pipe is pulled or before it is pulled; and only if any concrete or neat cement grout that settles in the well or drillhole is replaced.

(a) The well casing pipe may be removed from a dry drillhole and reinstalled in a well on the same property within 30 days of original drillhole construction,

(b) The well casing pipe may be removed from a well or drillhole as part of reconstruction ordered or requested by the department. The well casing pipe may only be reinstalled on the same property if the reconstruction takes place within 120 days of the original construction,

(c) The well casing pipe may be removed from a dewatering well or a drillhole. Such well casing pipe may only be reused for dewatering wells.

(d) The well casing pipe may be removed from a recently constructed well or drillhole and reused if the well casing pipe is inspected and approved for reuse by a department representative.

(6) REQUIREMENTS PRIOR TO FILLING AND SEALING A WELL OR DRILLHOLE. (a) All debris, pumps, piping, ungrouted liner pipe and any other obstruction known to be in the well or drillhole shall be removed if possible before the well or drillhole is filled and sealed. When a pump is or becomes stuck within the well, a rea-

Removed by Register March 2015 No. 711. For current adm. code see: http://docs.legis.wisconsin.gov/code/admin_code.

sonable attempt using the best available technology shall be made to pull it out. If the pump cannot be pulled, a tremie pipe shall be placed in the well to a depth just above the top of the pump and neat cement grout shall be pumped in to entomb the pump and fill and seal the entire well.

(b) In a badly fractured or highly permeable geologic formation sodium bentonite drilling mud may be circulated in the drillhole or in the well prior to the filling and sealing procedures.

(c) The sealing material to be used to fill and seal a well or drillhole greater than 3 inches in diameter shall be placed through a conductor (tremie) pipe or by means of a dump bailer except when approved bentonite chips are used for wells 4 inches or larger in diameter. Conductor (tremie) pipe used shall be any of the following:

1. Metal pipe,

2. Rubber−covered hose reinforced with braided fiber or steel and rated for at least 300 psi, or

3. For use at depths less than 100 feet, thermoplastic pipe rated for at least 160 psi including:

a. Polyvinyl chloride (PVC);

b. Chlorinated polyvinyl chloride (CPVC);

c. Polyethylene (PE);

d. Polybutylene (PB); and

e. Acrylonitrile butadiene styrene (ABS).

(d) The bottom end of the conductor pipe shall be submerged in the filling and sealing material at all times, except when an alternate procedure is approved by the department.

(e) The flow from a flowing well or drillhole shall be reduced as much as possible with a packer by extending the well casing pipe or by other approved means including those depicted in figures 20 to 22 before it is filled and sealed.

(f) Filling and sealing of wells or drillholes with inadequate grouting or sealing of the annular space outside the well casing pipe or liner shall be performed to ensure complete sealing of the annular space. Techniques are situation dependent and may include reaming a new annular space outside the well casing pipe, use of pressure grouting methods or perforation of the well casing pipe. When perforation of the well casing or liner pipe is undertaken, it shall be done in a manner according to par. (h).

(g) The well casing pipe and filling and sealing material may be terminated as much as 3 feet below the ground surface or to a depth below any future building foundation at the time of the filling and sealing procedure.

(h) When an ungrouted well casing pipe or liner cannot be pulled, it shall be perforated or ripped in place prior the filling and sealing according to the following procedures:

1. The casing pipe or liner shall be perforated using projectiles fired perpendicular to the length of the string of pipe. The perforations shall extend completely through the casing or liner pipe. As an alternative the casing pipe or liner may be vertically ripped.

2. Four perforation shots or one rip shall be provided for each 5−feet of casing or liner.

3. Each perforation shot shall be a minimum of 0.4 inches in diameter. Each rip shall have a minimum width of 0.25 inches and a minimum length of 12 inches.

4. The orientation of each successive perforation shot or rip shall be rotated by 90 degrees along the string of pipe.

5. After the well casing or liner has been perforated or ripped, the well shall be completely filled with neat cement from the bottom up to the ground surface. The well shall be filled both inside and outside the string of casing or liner pipe using a pressure grouting method in accordance with the requirements of s. NR 812.20

(i) When a well has a gravel pack that extends up to or within 20 feet of the ground surface, at least the top 20 feet of it shall be jetted out or removed in some other manner. Once the gravel pack has been removed the open annular space shall be filled and sealed with neat cement grout or concrete applied with a pressure method injected through a conductor (tremie) pipe.

(7) FILLING & SEALING OF WELLS AND DRILLHOLES, METHODS, AND MATERIALS. (a) *Methods.* Once obstructions have been removed from a well or a drillhole, it shall be filled and sealed, from the bottom up, with the materials specified in this paragraph and in Table C with the use of a conductor (tremie) pipe, except where the use of a conductor pipe is specifically exempted, by using one of the following methods:

1. 'Wells and drillholes completed in unconsolidated formations'. a. Drilled wells and drillholes or driven−point wells larger than 3 inches in diameter in unconsolidated formations shall be filled and sealed with neat cement grout, concrete (sand−cement) grout, concrete or with department−approved bentonite chips as provided and specified in subd. 3. for wells 4 inches or larger in diameter.

b. Wells and drillholes less than or equal to 3 inches in diameter completed in unconsolidated formations shall be filled and sealed with neat cement grout which may be poured or pumped down the drive pipe or drillhole. The use of a conductor pipe is not required.

2. 'Filling and sealing bedrock wells and drillholes'. Wells and drillholes completed in bedrock formations shall be completely filled and sealed from the bottom up with neat cement grout, concrete (sand−cement) grout, concrete or approved bentonite chips as provided in subd. 3. As an alternative for uncontaminated bedrock wells and drillholes deeper than 250 feet, chlorinated, sand−free pea gravel may be used to fill and seal the well or drillhole from the bottom up to 20 feet below the bottom of the casing pipe, or up to the 250−foot depth, whichever is deeper. This alternative may be used provided that for wells having drillholes extending through the Maquoketa Shale formation, a neat cement grout, concrete or bentonite chip plug at least 40 feet thick is placed and centered at the contact surface between the Maquoketa Shale and adjacent geologic formations, both above and below. Additionally, a neat cement grout, concrete or bentonite chip plug at least 40 feet thick shall be placed and centered at the top of the uppermost Cambrian Sandstone formation and at the top of the Eau Claire Formation of the Cambrian Sandstone whenever these layers are present in the open bedrock drillhole. When pea gravel is used for this alternative, it may be poured without the use of a conductor pipe provided the well is sounded at 50−foot intervals to ensure that bridging of the gravel in the well does not occur.

3. 'Use of bentonite chips to fill and seal wells and drillholes'. Approved bentonite chips may be used to fill and seal both unconsolidated formation and bedrock wells and drillholes with the following restrictions:

a. For wells and drillholes 4−inch diameter and larger the total depth may not be deeper than 500 feet and the number of feet of standing water in the well or drillhole may not be more than 350 feet. As an alternative for uncontaminated wells and drillholes deeper than 250 feet, chlorinated, sand−free pea gravel may be used to fill and seal the well or drillhole from the bottom up to 20 feet below the bottom of the casing pipe, or up to the 250−foot depth, whichever is deeper. This alternative may be used provided that for wells or drillholes extending through the Maquoketa Shale formation, a bentonite chip plug at least 40 feet thick is placed and centered at the contact surfaces between the adjacent geologic formations, both above and below. Additionally, a neat cement grout, concrete or bentonite chip plug at least 40 feet thick shall be placed and centered at the top of the uppermost Cambrian Sandstone formation and at the top of the Eau Claire Formation of the Cambrian Sandstone whenever these layers are present in the open bedrock drillhole. When pea gravel is used for this alternative, it may be poured without the use of a conductor pipe pro-

Removed by Register March 2015 No. 711. For current adm. code see: http://docs.legis.wisconsin.gov/code/admin_code.

vided the well is sounded at 50−foot intervals to ensure that bridging of the gravel in the well does not occur.

b. Not allowed for wells and drillholes less than 4−inch diameter, and

c. Not allowed for any well or drillhole filled with drilling mud or bentonite slurry.

d. Fine particles and dust, typically present in the bags of chips, shall be prevented from entering the well by pouring the chips across a coarse−mesh screen such that they tumble under their own weight across the screen before falling into the well.

e. The chips shall be poured at a rate such that a 50−pound bag is emptied in a time period not less than 3 minutes. Once the chips rise above the water table, the rate of pour may be increased.

f. The depth of chips shall be monitored during the filling process, at a minimum of once every calculated 10 bags, to ensure the chips are not bridging in the well or drillhole. Any bridge of the chips shall be removed.

g. Water from a clean, bacteriologically safe and uncontaminated source shall be poured into the well in order to hydrate the chips. Water shall be introduced until the water level rises to the top of the well casing and the well will not accept any additional water at the time the individual who performs the filling and sealing operation leaves the site.

4. 'Filling and sealing dug and bored wells'. a. Dug or bored wells shall have the cover removed and the top 5 feet of curbing or concrete wall removed. Rock curbing may be caved into the drillhole as the well is being sealed only if done in a manner to prevent bridging. The well shall be filled and sealed using clean clay or silt, clean native soil, approved bentonite chips, concrete, concrete (sand−cement) grout or neat cement grout if constructed in unconsolidated formations.

b. Dug wells and drillholes constructed partially or completely into bedrock shall be filled and sealed with neat cement grout, concrete (sand−cement) grout, concrete or approved bentonite chips to a point at least 2 feet above the top of the bedrock. The remainder of the well or drillhole may be filled and sealed using any of the materials listed in subd. 4. a.

c. Dug or bored wells 18 inches in diameter and smaller shall be filled and sealed by means of a conductor (tremie) pipe, except when bentonite chips are used as specified in subd. 3. or when clean clay or silt or clean native soil is used and the dug or bored well is 25 feet deep or less.

5. 'Well pits'. When a well terminating in a pit is filled and sealed, the pit shall also be filled and sealed except when the pit is a subsurface pumproom (alcove) adjoining a basement. When a well terminating in a pit is extended above grade, the pit shall be filled and sealed. Pits shall be properly filled and sealed by first removing from the pit, all water system features, including but not limited to the pressure tank, pump, discharge piping, electrical wiring and conduit, any treatment equipment, and then by perforating the floor, knocking out or perforating one wall with several holes and filling and sealing the pit with clean native soil less permeable than the soil surrounding the pit. If the pit will only be used for the purpose of housing valves and the pit complies with NR 812.36 (1), the pit may be kept.

6. 'Non−pressure conduits'. When wells having non−pressure conduits are filled and sealed, the basement end of the conduit shall be permanently sealed with a watertight cap or seal.

7. 'Filling heat exchange drillholes'. a. If the loops for a heat exchange drillhole have not been grouted in place and can be removed from the drillhole, then the loops shall be removed and the drillhole shall be filled with grout.

b. If the loops for a heat exchange drillhole have been grouted in place and cannot be removed from the drillhole, then the loops shall be evacuated of all fluids and grout shall be pumped into the loops. The drillhole shall be grouted. The loops may be left in place after the grouting procedure or may be cut off below ground surface.

Removed by Register March 2015 No. 711. For current adm. code see: http://docs.legis.wisconsin.gov/code/admin_code.

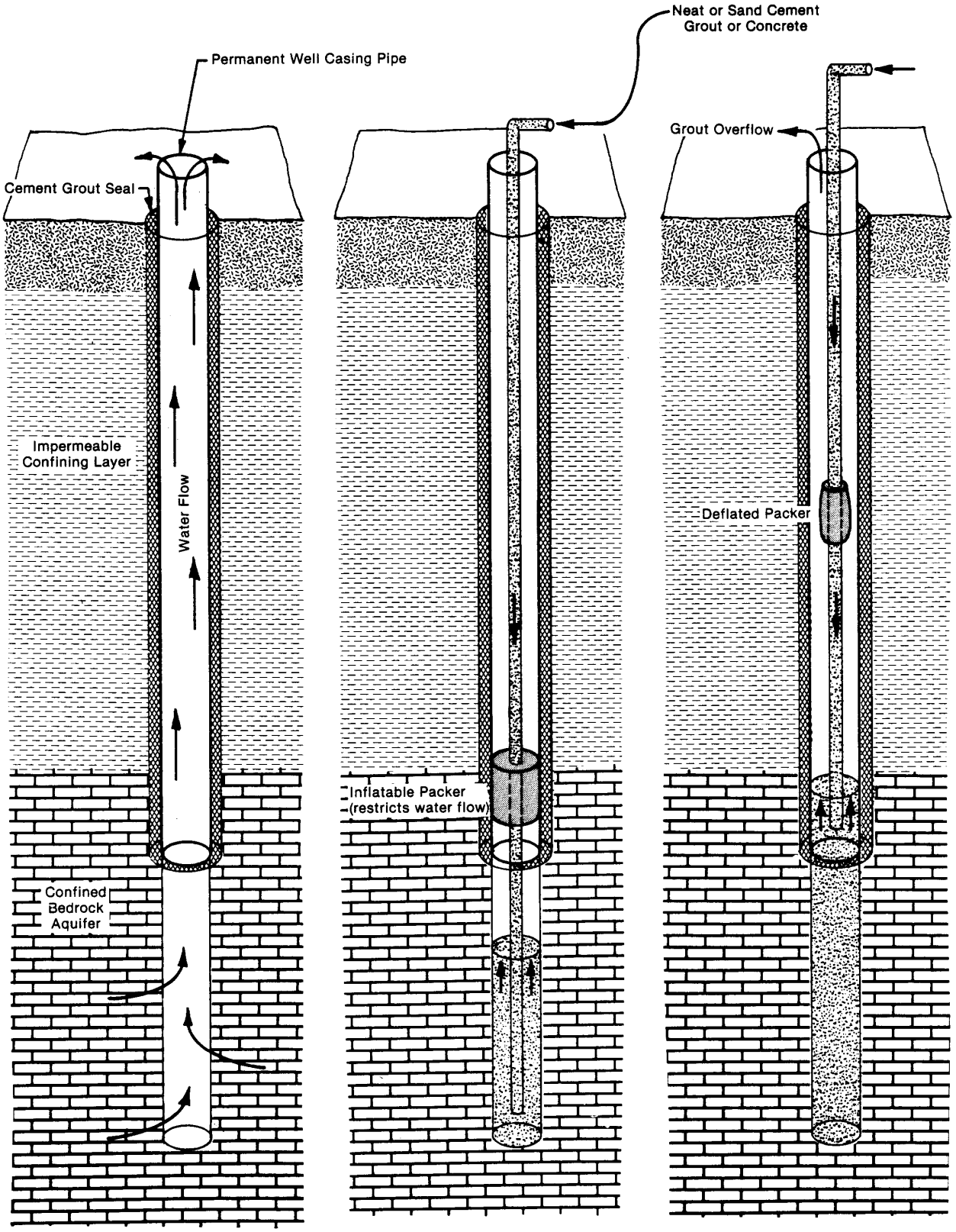

Figure 20. Inflatable packer method for permanently abandoning a flowing well.

Removed by Register March 2015 No. 711. For current adm. code see: http://docs.legis.wisconsin.gov/code/admin_code.

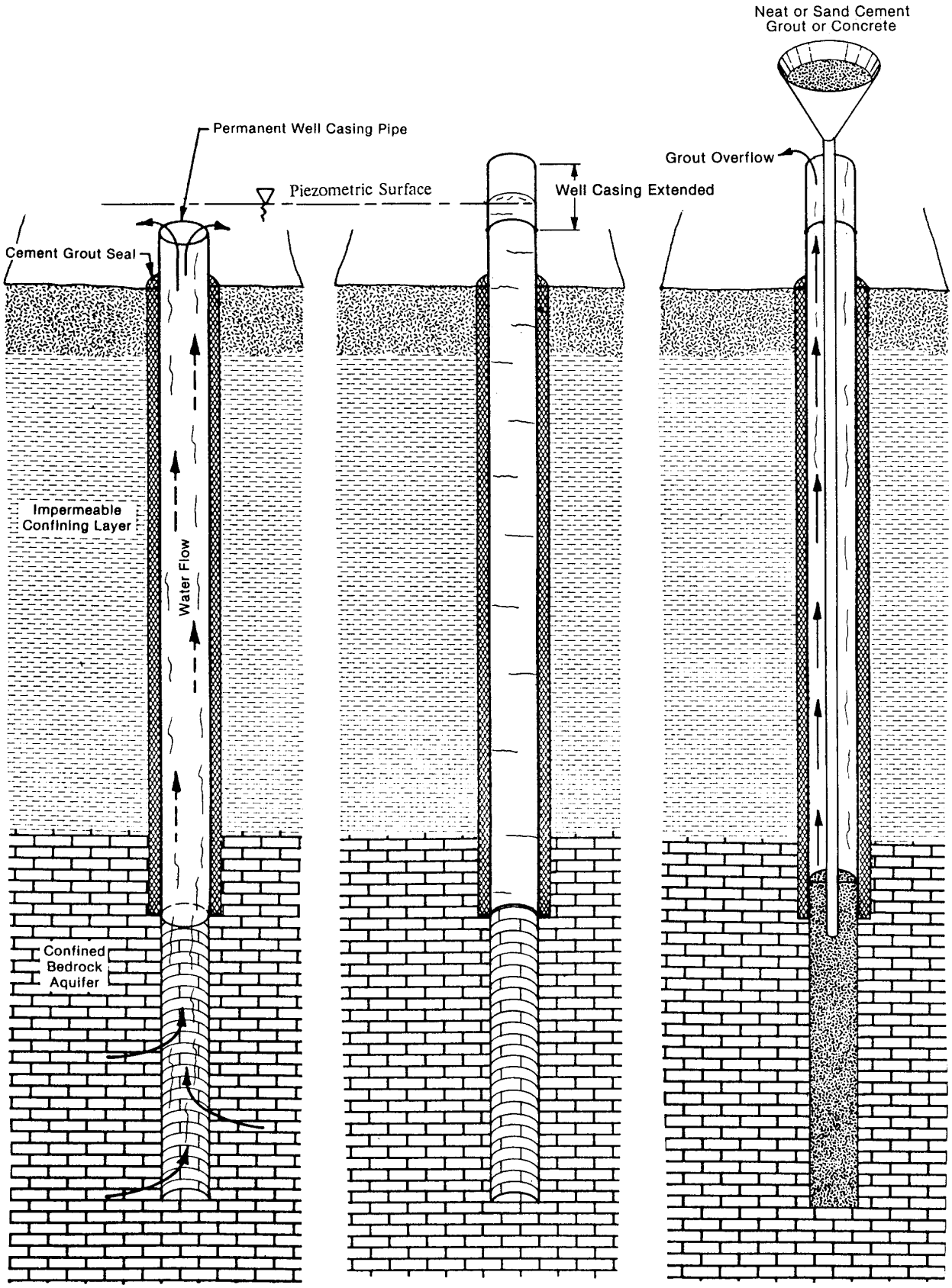

Figure 21. Method for reducing flow in a flowing well by extending the well casing pipe before permanently abandoning the well.

Removed by Register March 2015 No. 711. For current adm. code see: http://docs.legis.wisconsin.gov/code/admin_code.

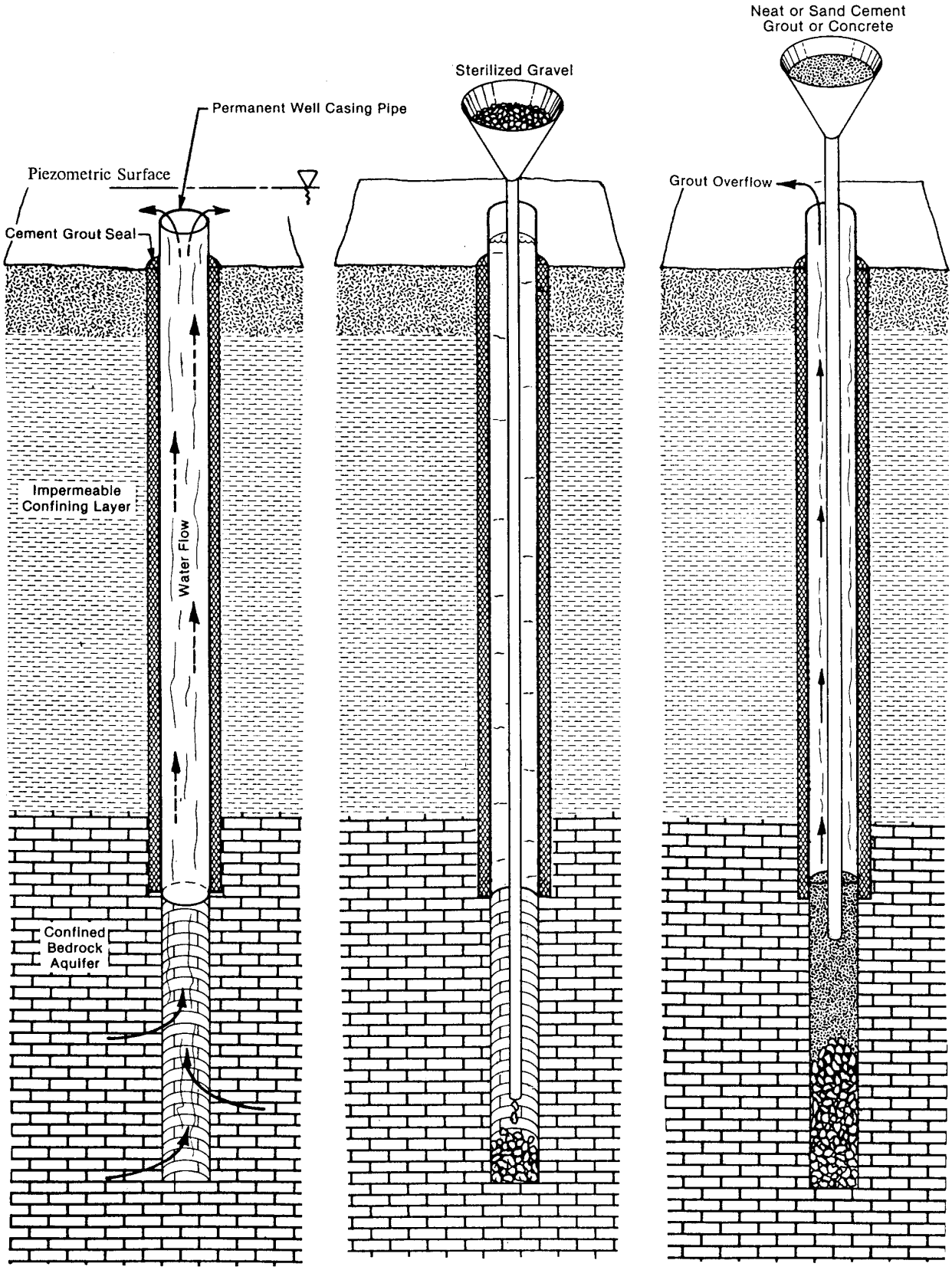

Figure 22. Method for reducing flow in a flowing well by first adding gravel to the bottom before permanently abandoning the well.

Removed by Register March 2015 No. 711. For current adm. code see: http://docs.legis.wisconsin.gov/code/admin_code.

(b) *Materials.* 1. Neat cement grout or concrete (sand−cement) grout as described in s. NR 812.20 (1), or approved bentonite chips shall be used to fill and seal wells and drillholes where the use of such materials are required in this section. The grout mixture shall be measured with a mud balance and shall have a slurry weight of at least 15.2 pounds per gallon unless powdered bentonite is added. Approved powdered bentonite may be added to the neat cement grout mixture, using a ratio of up to 5 pounds of bentonite per 94−pound bag of cement. When added, the resulting mixture shall meet the specifications of Table VI. Bentonite used for this purpose shall be 90−barrel per ton yield meeting the specifications of API 13A, Sec. 9. High yield drilling mud bentonite, also known as beneficiated bentonite, may not be used for this purpose. Any other ingredients or additives, to increase fluidity, control shrinkage or time of set may only be used with approval.

Table VI

(To Be Used When Adding Approved Powdered Bentonite to Neat Cement Grout for the Purpose of Filling and Sealing a Well)

Final slurry density (pounds per gallon)	Gallons of H_2O needed per each 94−pound sack of cement	Pounds of bentonite per sack of cement	Percent bentonite of final slurry	Cubic feet of slurry per sack of cement
15.8	5.0 gal./sack	0 lb.	0 %	1.15 ft^3/sack
15.6	5.3 gal./sack	0 lb.	0 %	1.19 ft^3/sack
15.4	5.5 gal./sack	0 lb.	0 %	1.22 ft^3/sack
15.2	5.9 gal./sack	0 lb.	0 %	1.27 ft^3/sack
15.0	6.0 gal./sack	0 lb.	0 %	1.28 ft^3/sack
14.8	6.2 gal./sack	1 lb.	~ 1 %	1.32 ft^3/sack
14.7	6.5 gal./sack	2 lb.	~ 2 %	1.36 ft^3/sack
14.4	7.2 gal./sack	3 lb.	~ 3 %	1.46 ft^3/sack
14.1	7.8 gal./sack	4 lb.	~ 4 %	1.55 ft^3/sack
13.8	8.5 gal./sack	5 lb.	~ 5 %	1.64 ft^3/sack

Note: Note: Table VI is based on Halliburton Cementing Tables

2. Concrete shall consist of a mixture of cement, water, sand, and gravel in the proportion of one bag Portland cement (94 pounds) (ASTM C 150, Type I or API−10A, Class A), an equal measure of sand and an equal measure of gravel, by weight or by volume, and not more than 6 gallons of water. As an alternative, a commercially prepared mix may be used providing the mix has at least 6 bags of cement per cubic yard. The gravel size may not exceed 1/3 of the inside diameter of the conductor (tremie) pipe used for filling and sealing the well or drillhole.

Removed by Register March 2015 No. 711. For current adm. code see: http://docs.legis.wisconsin.gov/code/admin_code.

TABLE C
ACCEPTABLE MATERIALS AND METHODS FOR WELL FILLING AND SEALING

Well Type		Materials: Clean Clay or Silt or Clean Native Soil	Approved Bentonite Chips^	Neat Cement Grout	Concrete @	Sand-cement Grout	Bentonite-sand slurry w/ min. mud wt. 11 lbs gal	Chlorinated, sand-free pea gravel	Methods
Unconsolidated Formation Wells	Driven-Point Wells & Drillholes ≤ 3" diam.~	No	No	Yes	No	No	No	No	Neat cement may be poured without using a conductor# pipe
	Wells & Drillholes > 3" diam.	No	Yes, provided well is 4" minimum diameter & 500'maximum depth	Yes	Yes	Yes	**No**	♦Yes, but in depths below 250'	Conductor# pipe required except when bentonite chips or pea gravel is used
	Dug Wells ∞	Yes (top 5' of curbing must be removed following filling)	Yes	Yes	Yes	Yes	No	No	Conductor# pipe not required unless well is ≤ 18" diameter
Bedrock Wells	Bedrock wells not extending through Maquoketa Shale or Cambrian Sandstone	No	Yes, provided well is 4" minimum diameter & 500' maximum depth	Yes	Yes	Yes	No	♦Yes, but in depths below 250'	Conductor# pipe required except when bentonite chips or pea gravel is used
	Bedrock wells extending through Maquoketa Shale or Cambrian Sandstone	No	Yes in top 500' & for 40' plugs at top & bottom of Maquoketa Shale contact surfaces+	Yes	Yes	Yes	No	♦Yes, but in depths below 250', but not at Maquoketa Shale contact surfaces+	Conductor# pipe required except when bentonite chips or pea gravel is used
	Dug Wells ∞	Yes, but only in unconsolidated portion of well	Yes	Yes	Yes	Yes	No	No	Conductor# pipe required only for placement of grout or concrete; or if well is ≤ 18" diameter
Well Pits		Yes	Yes	Yes	Yes	Yes	No	No	Must perforate floor & knock out or perforate 1 wall of pit

~ It is not permissible to remove the drive pipe and screen no matter how shallow the well is.

∞ The top 5 feet of dug well curbing must be knocked out to provide a soil contact with the filling material.

@ When concrete is used, the grave size may not exceed 1/3 the inside diameter of the conductor pipe used.

The terms conductor pipe and tremie pipe are synonymous. The bottom of the pipe must remain submerged in the grout throughout the filling procedure. Conductor pipe must be metal pipe, thermoplastic pipe rated for at least 100 psi or rubber-covered hose reinforced with braided fiber or steel and rated for at least 300 psi.

^ Bentonite chips may only be used for wells not deeper than 500 feet and having not more than 350 feet of standing water in them. [See s. NR 812.26(7)(a)3.] The chips shall be poured across a coarse mesh screen such that excess dust does not enter the well. Four rate **shall not** be faster than 3 min. per 50 lb. bag to prevent bridging. **The depth of chips shall be monitored once every 10 bags. Water shall be added until the water level rises to the top of the well casing.**

♦ 40' Impermeable plugs shall be provided for certain bedrock formation changes [See s. NR 812.26(7)(a)2.

+ See NR 812.26(7)(a)2. and 3. for requirements regarding Cambrian Sandstone contact surfaces.

Removed by Register March 2015 No. 711. For current adm. code see: http://docs.legis.wisconsin.gov/code/admin_code.

(8) WELL AND DRILLHOLE FILLING AND SEALING REPORTS.. A well and drillhole filling and sealing report shall be filed with the department no later than 30 days after the well or drillhole is filled and sealed. The filling and sealing report shall be filed by the person performing the filling and sealing work on forms specified by the department and shall include a complete, true and accurate detailed description of the location of the well or drillhole that was filled and sealed, materials and method of filling and sealing, construction and geologic features and Wisconsin Unique Well Number, if known. Water well drillers, heat exchange drillers, well constructors and pump installers shall report any unused wells or drillholes that are not filled and sealed for which they have knowledge to the department. Beginning July 1, 2016 filling and sealing reports shall be filed with the department electronically.

(9) WELL AND DRILLHOLE FILLING AND SEALING LICENSE OR REGISTRATION REQUIREMENTS. In order to fill and seal a well or drillhole, or to verify that a well or drillhole was properly filled and sealed, a person must be licensed or registered in accordance with ch. NR 146 and ch. 280, Stats.

History: Cr. Register, January, 1991, No. 421, eff. 2–1–91; am. (2) (a) 4., (3), (6) (c) (intro.), (7) (a) (intro.) 1. b., 2., 3. a., 4. a. and c. and 5., cr. (2) (d), (7) (a) 6. and Table C, Register, September, 1994, No. 465, eff. 10–1–94; **CR 13–096: cr. (2) (a) 5m., am. (2) (b) 2., (c) 1.,cr. (7) (a) 7., am. (8), CR 13–099: am. (title), (1), (2) (a) (intro.), 1., 2., 4., cr. (2) (a) 5., 6., am. (2) (b), (c) (intro.), (d), (3), r. (4), am. (5) (intro.), r. (5) (e), am. (6) (title), (a), (b), (c) (intro.), 3., (d) to (g), cr. (6) (h), (i), am. (7) (title), (a) (intro.), 1., 2., 3. (intro.), a., cr. (7) (a) 3. d. to g., am. (7) (a) 4., (b), cr. Table VI, r. and recr. Table C, am. (8), cr. (9) Register September 2014 No. 705, eff. 10–1–14; correction in numbering in (2) (a) 5m. made under s. 13.92 (4) (b) 1., Stats., Register September 2014 No. 705.**

Subchapter III — Requirements for New Pump Installations and Water Treatment

NR 812.27 Pump installer requirements. (1) LICENSE REQUIREMENT. Pump installers shall hold a valid Wisconsin license. A master plumber licensed under ch. 145, Stats., may install a pressure tank without a pump installers license. The name and license number of the pump installer or pump installer firm shall be identified on the pump installation truck and similar equipment. The identification shall be at least 2 inches in height with at least 1/4 inch wide brush stroke. The identification shall have a sharp color contrast with the background on which it is applied. The identification shall remain legible.

(2) LOCATION REQUIREMENT. Except when the reporting requirements of s. NR 812.04 (2) are complied with, a pump may not be installed, replaced or serviced in a well that is not properly located according to the minimum location and separation requirements in effect at the time of construction and:

(a) According to the minimum location requirements in effect at the time of installation of any potential source of contamination, if the source was installed more recently, or

(b) According to the minimum location requirements of s. NR 812.08.

(3) PITS. Existing pits and subsurface pumprooms shall comply with the conditions of a department approval to construct the pit or to the minimum standards of s. NR 812.42 (2).

(4) PITLESS ADAPTERS AND UNITS. Pump installers or persons installing pumps shall use approved pitless adapters and pitless units to make subsurface connection to wells as specified in s. NR 812.31.

(5) DISINFECTION AND WELL SEALS. The pump installer shall disinfect any potable well and water system according to s. NR 812.22 (4) and (5) upon completion of the original pump installation and thereafter, anytime the well is entered for the purpose of measuring or diagnosing any feature or problem with the well or after the well is entered for rehabilitation, redevelopment, reconditioning or cleaning or if the well is entered for the purpose of installing, replacing or repairing any equipment located within the well. Following disinfection, the disinfectant shall be flushed according to s. NR 812.22 (5). The disinfection and flushing shall be completed before the system is placed into service. The pump installer shall seal or cover the well with an approved vermin–proof cap or seal.

Note: The pump installer may designate the owner, the property lessee or any other person to flush the system.

(6) SAMPLING AND REPORTING REQUIREMENTS. In accordance with all requirements of s. NR 812.41 (3), the pump installer, or his or her agent, shall collect a water sample or samples from a potable well no later than 30 days following completion of the original pump installation and thereafter no later than 30 days after the well is entered for the purpose of measuring or diagnosing any feature or problem with the well or after the well is entered for rehabilitation, redevelopment, reconditioning or cleaning or if the well is entered for the purpose of installing, replacing or repairing any equipment located within the well. The water sample shall be analyzed for coliform bacteria by either a laboratory certified by DATCP for bacteriological analysis of drinking water and having an agreement with the department for electronic submission of laboratory test reports to the department no later than 30 days after completion of the analysis, or be analyzed by the Wisconsin state laboratory of hygiene. For pump work that involves entry into the well, other than the original pump installation, water samples shall also be collected by the pump installer and analyzed for nitrate and arsenic by laboratories certified for those analyses and having an agreement with the department for electronic submission of laboratory test reports to the department within 30 days after completion of the analyses, or analyzed by the Wisconsin state laboratory of hygiene. The pump installer may designate the owner, the property lessee or any other person to collect the samples and submit them for analysis. The pump installer shall provide a copy of the laboratory test report(s) to the well owner within 10 days of the receipt of the report(s) by the pump installer.

(7) NOTIFICATION OF CONTAMINATED WELLS. Pump installers shall notify a well owner if the pump installer becomes aware that the water from the well contains contaminants in excess of the primary drinking water standards in ch. NR 809.

(8) BACTERIOLOGICALLY UNSAFE WELLS. The pump installer shall return to the well site to attempt to correct a problem with a potable well that produces bacteriologically unsafe water. The pump installer shall return no later than 90 days after the pump installation is completed or 30 days after the pump is placed into service, whichever is longer. If noncomplying installation or failure to disinfect was not the cause of the problem, a fee may be charged by the pump installer for any corrective work.

(9) Potable water supplies shall be protected to prevent back–flow, back–siphonage and cross–connections according to the requirements in s. SPS 382.41 and s. NR 812.32 (1) (f).

(10) When a pump installer has performed pump installation work not in compliance with this chapter, the pump installer shall return to bring the system into compliance. The pump installer shall pay all costs for bringing the installation into compliance with this chapter, other than those costs that would have been charged for an initially complying installation.

(11) A pump installer may not install a pump in a well having an open annular space that extends deeper than twice the depth of the pitless adapter or pitless unit. When an annular space is open to a depth greater than this depth, the pump installer shall inform the well driller so that the driller knows to return to the job site and seal the annular space according to s. NR 812.20. The pump installation shall not be completed until the well driller has resealed the annular space. If the annular space is open to a depth less than or equal to twice the depth of the pitless adapter, the pump installer may seal the open annular space with an approved granular bentonite hydrated with water from a known safe and uncontaminated source.

History: Cr. Register, January, 1991, No. 421, eff. 2–1–91; am. (2), (4) to (6), cr. (8) and (9), Register, September, 1994, No. 465, eff. 10–1–94; correction in (9) made under s. 13.93 (2m) (b) 7., Stats., Register, September, 1996, No. 489; correction in

Removed by Register March 2015 No. 711. For current adm. code see: http://docs.legis.wisconsin.gov/code/admin_code.

(9) made under s. 13.92 (4) (b) 7., Stats., Register December 2011 No. 672; **CR 13–099: am. (5), r. and recr. (6), am. (8), (9), cr. (10), (11) Register September 2014 No. 705, eff. 10–1–14.**

NR 812.28 Pump installation equipment and supply pipe. The department may prohibit the use of any water supply equipment if the department finds there is substantial evidence that the equipment poses a significant hazard to safe drinking water or the groundwater. The department shall state its decision and conclusions in writing to the manufacturer, the licensed pump installers and the industry representatives including the Wisconsin Water Well Association and the Wisconsin Pump and Well Suppliers Association. Unless otherwise specified, the prohibition of the use of any water supply equipment will take effect 12 months after the initial prohibition notice. Pump discharge and supply piping shall conform to the specifications in s. NR 812.17 for steel pipe or shall conform to the requirements in the "Pipe and Tubing for water services and private water mains" table in s. SPS 384.30, except that Type M copper pipe may not be installed underground. Pipe used for year–round installations shall be protected from freezing. Lead–based solder for pipe connections may not be used. The department recommends that galvanized pipe not be used when the water quality is known to be corrosive. Limitations on the use of plastic pipe are found in s. SPS 384.30. Plastic pipe may not be used for buried pipe in soils known to be contaminated with volatile organic chemicals. Plastic pipe may be used as drop pipe installed within a well or for discharge piping between the well and the building served, provided it meets s. SPS 384.30, standards and has a minimum pressure rating of 150 pounds per square inch. When plastic pipe extends through the seal of a well with an above–ground discharge, the portion of the plastic pipe extending above–ground from the well shall be protected from sunlight or the plastic pipe used shall be of the type with inhibitors recommended for use in direct sunlight.

Note: The department recommends the installation of torque arresters on the drop pipe for submersible pumps.

History: Cr. Register, January, 1991, No. 421, eff. 2–1–91; am. Register, September, 1994, No. 465, eff. 10–1–94; corrections made under s. 13.93 (2m) (b) 7., Stats., Register, May, 2000, No. 533; correction made under s. 13.92 (4) (b) 7., Stats., Register December 2011 No. 672; **CR 13–099: am. Register September 2014 No. 705, eff. 10–1–14.**

NR 812.29 Height of finished well. (1) For wells constructed after February 1, 1991, the pump installation shall be completed such that the watertight well casing pipe for all wells, except those located in a floodplain, shall terminate at least 12 inches above the established ground surface, above a pumphouse or building floor or above any concrete or asphalt platform surrounding the well casing.

(2) When a low capacity well is located in an area of traffic or where the well terminus is at risk of contact by vehicles, machinery, equipment or any other hazard that poses a significant threat of damage to the well terminus, the well shall be protected from physical damage by either using rigid metal posts or comparable barriers or by terminating it within a driveway ramp constructed in accordance with s. NR 812.36.

(3) For wells in floodplains, the top of a well and an overflow outlet from a flowing well shall terminate at least 2 feet above the regional flood elevation. Pits may not be installed to enclose a well or pump installation.

(4) A driveway ramp may not be installed in a floodplain.

(5) The well casing pipe may not terminate in or extend through the basement or crawl space of a building, but may terminate in a walkout basement if the following conditions are met:

(a) It is possible to walk directly outside from the walkout basement without walking upstairs or upslope.

(b) The surface of the ground around the outside exit door of the walkout basement slopes down away from the door.

(c) The well and pump installation are accessible for repair and removal.

(d) The well produces water continuously free from contaminants in excess of the drinking water standards of s. NR 812.06.

(e) The well casing pipe depth meets the requirements of s. NR 812.42 (1) (b).

(f) The well and pump installation are in compliance with all other requirements of this chapter.

(g) The walkout basement is not subject to flooding

(h) The walkout basement is not in a floodway or floodplain.

History: Cr. Register, January, 1991, No. 421, eff. 2–1–91; **CR 13–099: renum. section to (1), (3), (4) and am., cr. (2), (5) Register September 2014 No. 705, eff. 10–1–14.**

NR 812.30 Vermin–proof well caps and seals. (1) REQUIREMENTS AND DEPARTMENT APPROVAL CRITERIA. New wells shall be sealed or covered with an approved weather and vermin–proof compression type well cap or seal installed on or in the top of the well casing pipe. Examples are depicted in figures 23 and 24. All well cap or seal approvals shall be based on materials of construction, method of venting, effectiveness of gasket, ease of removal for inspection of the inside of the well and method of attachment to the well casing pipe. Stud bolts are preferred. The nuts and bolts shall be made of material such that corrosion is minimized. A list of approved models is available from the department.

Note: Requirements for vermin–proof caps and seals for existing wells are listed in s. NR 812.42 (8).

(2) WELL SEAL TYPE. When a sanitary well seal is used to cover the upper well terminal, it shall have a one–piece top plate. A split top plate seal may not be installed unless it is enclosed in a substantial, permanent weather–proof shelter meeting the requirements of s. NR 812.40.

(3) WELL VENT. A screened downward facing well vent or other vent may be provided for the well cap or seal for drilled wells. When the well is a flowing well and the well head must be maintained watertight or when there is concern for air entrained bacteria to enter the well through the vent, the vent opening may be plugged watertight with a threaded plug. Vent pipes extending above the well casing pipe shall terminate in a downward facing bend and shall be screened. Screens shall be made of material not easily corroded and shall be firmly seated in the vent opening. Vent openings incorporated as part of the underside of an approved well cap or seal are allowed.

Note: The department recommends a vent be provided for the well cap or seal of a well that has significant water level drawdowns during normal pump operation. This recommendation does not apply to flowing wells.

(4) HOLD–DOWN DEVICE. Well caps or seals may not be used as a hold–down device to prevent submersible pump discharge piping from coming off a pitless adapter or unit. A locking clamp or other similar approved device may be used to hold the submersible pump discharge pipe in place.

(5) CONDUIT FOR ELECTRICAL WIRING. Where electrical wiring emerges from an underground installation to supply well pump equipment it shall be protected from physical damage by installing conductors or cables within a nonmetallic or steel raceway. The raceway material shall be: Listed, Schedule 80 sunlight resistant Rigid Polyvinyl Chloride Conduit (Type PVC), Listed, Intermediate Metal Conduit (IMC), or galvanized Rigid Metal Conduit. The conduit shall be threaded tightly into the well cap or shall be secured and sealed in an equivalent manner. Where a direct buried electrical cable supplies the well, the bottom of the conduit providing physical protection shall extend a minimum of 2 feet below grade. The conduit shall be sealed above grade in a watertight manner with a listed fitting, or by use of 100% silicone, urethane, or Butyl caulking. Where the conduit or raceway extends continuously from the well to a building or pump equipment enclosure, both ends of the conduit or raceway shall be sealed in a watertight manner as described in this paragraph.

(6) PREPARATION OF TOP OF THE WELL CASING PIPE. Any jagged edges or other significant irregularities in the top of the well casing

Removed by Register March 2015 No. 711. For current adm. code see: http://docs.legis.wisconsin.gov/code/admin_code.

pipe shall be removed by the well driller or the pump installer before the vermin−cap or seal is installed.

History: Cr. Register, January, 1991, No. 421, eff. 2−1−91; am. (1), (3) and (5), Register, September, 1994, No. 465, eff. 10−1−94; **CR 13−099: am. (3), r. and recr. (5), cr. (6) Register September 2014 No. 705, eff. 10−1−14.**

NR 812.31 Pitless adapters and pitless units. Pump installers or persons installing pumps shall use pitless adapters or pitless units approved by the department to make subsurface connections to wells. Nonpressure conduits may not be used, unless a variance is granted by the department.

Note: In areas especially prone to lightning strikes to wells having submersible pumps, the department will grant variances to the prohibition against nonpressure conduits.

(1) DEPARTMENT APPROVAL CRITERIA. The design criteria on which pitless adapter or pitless unit approvals are based include, but are not limited to, materials of construction, thickness of pipe or tubing, thickness of other component parts, method of fabrication, method of connection and the integrity of the seal to the well casing pipe. The department may require additional standards and tests, including minimum pressure test performance, that the department deems necessary to demonstrate the sanitary integrity of any adapter or unit submitted for department approval. A list of approved models is available from the department. Pitless receiver tanks, factory−assembled pitless units, both short and full length models are depicted in figures 25 to 28.

(2) GENERAL REQUIREMENTS. (a) A pitless subsurface pipe connection to a well casing pipe shall be made with an approved weld−on, clamp−on, bolt−on or bolt−through pitless adapter or with an approved pitless unit, except that a bolt−through adapter may only be installed for a well constructed with polyvinyl chloride well casing pipe that has a permanently attached well screen. A clamp−on, bolt−on or bolt−through pitless adapter may only be installed for a well that will serve a single family residence. Weld−on adapters or pitless units shall be welded or threaded to the well casing pipe according to sub. (3) or (4). All welding shall be performed in accordance with s. NR 812.18. A pitless adapter or pitless unit shall be installed according to any approval conditions and according to the manufacturer's instructions.

(b) The inside diameter of a pitless unit may not be smaller than the inside diameter of the well casing pipe. No part of a pitless adapter may extend into the inside of the well casing pipe, except that a bolt−through pitless adapter may be installed for a well with polyvinyl chloride well casing pipe having a permanently attached screen.

(c) An above−ground discharge shall be provided for all school and high capacity wells except that an approved pitless unit or an approved weld−on pitless adapter may be installed if the welded or threaded joints are pressure tested for leakage as depicted in figure 29 or by a comparable testing procedure. The adapter or unit joints shall be tested and proven watertight under a pressure of not less than 14 psig. The pressure shall be maintained for at least 30 minutes. The pump installer shall notify the department at least 24 hours before testing, so that a department employee may witness the test.

(d) An above−ground discharge shall be provided for crystalline (granite) bedrock wells approved for installation of 25 or less feet of well casing pipe. When installing the above−ground discharge, the required neat cement grout surrounding the well casing pipe may not be removed.

(3) PITLESS UNIT CONNECTIONS TO STEEL WELL CASING PIPE. (a) When a well casing pipe is not terminated at the desired depth for the installation of an approved factory assembled pitless unit, the well casing pipe shall be cut off at the desired height, and the pitless unit may be welded or threaded and coupled to the top of the well casing pipe by one of the following methods:

1. Cutting off the well casing pipe squarely, providing a bevel for the top of the well casing pipe and welding the beveled end of the unit to the beveled end of the well casing pipe.

2. Cutting threads on the top of the well casing pipe with a pipe die and threading a full−standard recessed coupling watertight to the threaded end of the unit and to the top of the well casing pipe.

3. Welding a pipe nipple, having threads on one end, beveled on the other end and meeting the requirements of s. NR 812.17 (2), to the cut off top beveled end of the well casing pipe and threading a full−length standard recessed coupling watertight to the threaded end of the unit and to the nipple. The top of the well casing pipe and the bottom of the pipe nipple to be welded shall both have beveled ends. If the pitless unit has female threads, the unit may be threaded watertight directly to the threaded end of the nipple.

4. Reaming out the threads of a full standard recessed coupling, at least 1/3 the length of the coupling, and welding the coupling to the top of the cut−off well casing pipe with a fillet weld on the inside or the outside contact surface of the coupling.

(b) When installing an approved factory assembled pitless unit, the following restrictions shall be followed:

1. The threaded lower end of a pitless unit may not be welded to the cut−off end of a well casing pipe.

Removed by Register March 2015 No. 711. For current adm. code see: http://docs.legis.wisconsin.gov/code/admin_code.

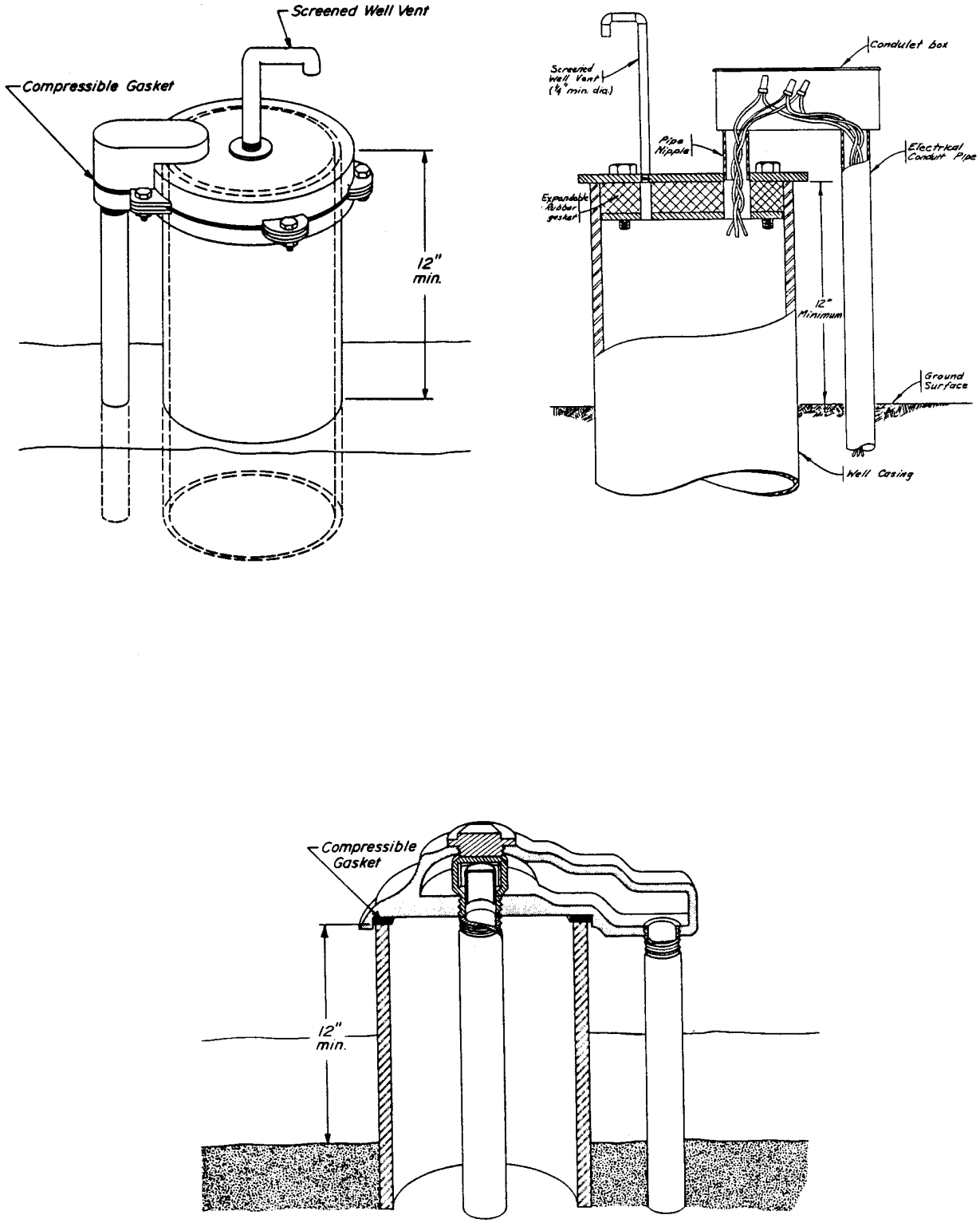

Figure 23. Examples of sanitary well seals.

Removed by Register March 2015 No. 711. For current adm. code see: http://docs.legis.wisconsin.gov/code/admin_code.

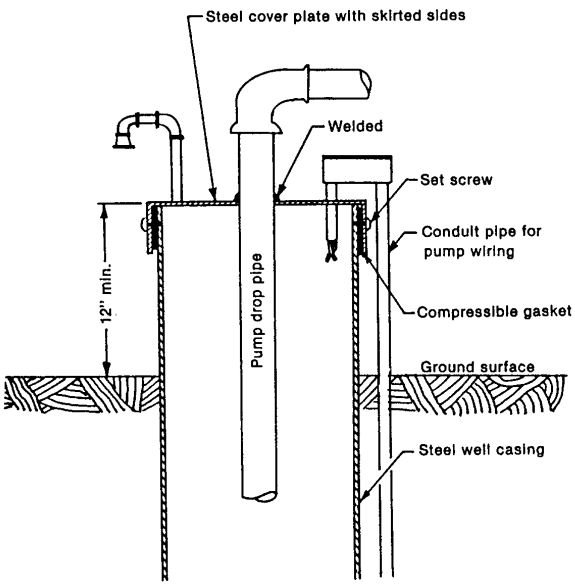

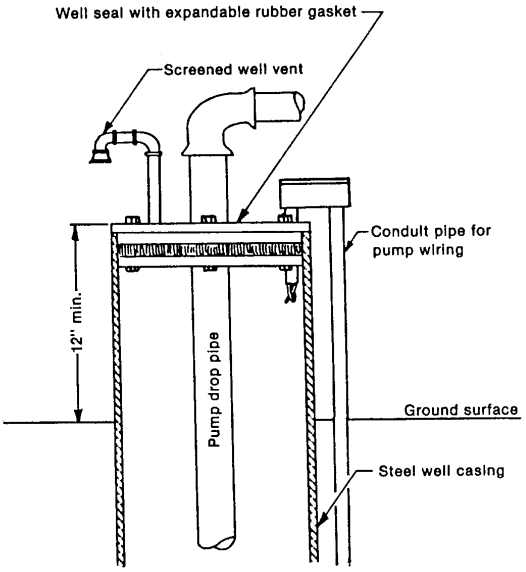

Figure 24. Well seals for high capacity wells with submersible pumps.

2. The threaded ends of a short model, factory−assembled pitless unit may not be welded to the top of a cut−off well casing pipe nor to the section of riser pipe extending from the unit to ground grade, except that the unit may be welded to the cut−off well casing pipe and to the riser pipe if the ends of the unit, the well casing pipe, and the riser pipe are cut and beveled according to par. (a) 1.

3. Factory−assembled pitless units, including those fabricated with pitless receiver tanks, may not be connected to the well casing pipe by means of a compressible joint.

(4) PITLESS UNIT AND PITLESS ADAPTER CONNECTIONS TO THERMOPLASTIC WELL CASING PIPE. (a) Steel well casing pipe, pitless units or pitless adapters may not be welded after they are attached to thermoplastic well casing pipe. The thermoplastic coupling shall be threaded onto the pitless unit before it is solvent cemented to the top of the thermoplastic well casing pipe. This is depicted in Figure 31.

(b) Only approved lubricant specifically intended for use with thermoplastic well casing pipe may be used with threaded couplings used for pitless units and pitless adapters. A threaded joint shall be tightened no more than one full turn using a strap wrench.

(c) Threaded couplings may only be used for installation of pitless units or pitless adapters after placement of the well casing pipe.

(d) The portion of the well casing pipe above a short length pitless unit shall be steel or thermoplastic well casing pipe meeting the requirements of s. NR 812.17.

(e) When thermoplastic well casing pipe is extended above the ground surface, the thermoplastic pipe may be contained in a pumphouse or in an oversized steel pipe extending from below the frost depth to the top of the thermoplastic pipe.

(f) A permanent tag bearing the message "plastic well casing pipe" shall be attached to the top of the well.

(5) PITLESS RECEIVER TANKS. Pitless receiver units shall be approved by the department.

(a) Steel buried tanks that are part of an approved pitless unit shall have a minimum wall thickness of 1/4−inch and shall have an identifying seal, label or plate showing the manufacturer's name and model number.

(b) An approval shall be obtained for the installation of a buried pitless receiver tank having a gross volume greater than 1,000 gallons.

History: Cr. Register, January, 1991, No. 421, eff. 2−1−91; am. (intro.), (1), (2) (a), (b) and (d), (3) (a) 3., (5) (a) and Figure 28, cr. (5) (intro.), Register, September, 1994, No. 465, eff. 10−1−94; **CR 13−099: am. (2), (4) (e) Register September 2014 No. 705, eff. 10−1−14.**

NR 812.32 Pumps. (1) GENERAL PUMP INSTALLATION REQUIREMENTS. (a) Pump installations shall be carried out so the pump installation will be:

1. Installed so it and its surroundings are in a sanitary condition;

2. Properly sized so as to provide the volume of water necessary, where obtainable, for an adequate water supply;

3. Designed to meet the well characteristics and not exceed the yield of the well except when the available aquifer is low producing;

4. Installed for operation without priming or breaking suction;

5. Installed in such manner as to provide adequate protection against contamination of the water supply from any surface or subsurface sources.

6. Installed in a manner so that it is accessible for maintenance, repair and removal.

(b) Pump motor lubricant or coolant oil shall be USDA or FDA approved food contact grade formulations.

Note: Such formulations are usually based on National Formulary, white food grade mineral oil or inhibited propylene glycol with FDA approved components.

(c) Every pump shall be installed with an above−ground discharge such as depicted in figure 32, an approved subsurface pitless adapter or pitless unit such as depicted in figure 33 or an approved subsurface well casing pipe connection.

(d) When water is pumped or flows to discharge into a body of water, the end of the discharge pipe shall be extended at least 2 pipe diameters above the highest elevation of the water.

(e) All well pump electrical installations shall conform to the Wisconsin Electrical Code, incorporated by reference in the Wisconsin Electrical Code, ch. SPS 316, and the requirements specified in that chapter. In addition to these requirements, no electrical control box or any other electrical device shall be installed inside a well casing pipe, except where the device is directly incorporated into the manufactured pump assembly.

Removed by Register March 2015 No. 711. For current adm. code see: http://docs.legis.wisconsin.gov/code/admin_code.

(f) For water systems with multiple wells interconnected to a common plumbing piping system, the department may require additional equipment to reduce the possibility of back−flow or back−siphonage between wells. This equipment may include a separate pressure tank for each well, additional check valves, air gaps, reduced pressure principle backflow preventers, pressure switches, and electronic pump control devices.

(2) OFF–SET PUMP INSTALLATIONS. (a) *Buried suction pipes.* 1. Buried suction pipes shall be enclosed in a pressurized conduit and the annular space between the 2 pipes shall be maintained under system water pressure at all times provided by a pipe extending from the pump watertight to the conduit.

Note: In areas especially prone to lightning strikes to wells having submersible pumps, the department will grant variances to the prohibition against nonpressure conduits.

2. When a suction pipe crosses a sewer, the suction pipe shall be laid according to the sewer separation requirements of s. NR 812.32 (4).

Note: A well casing pipe nipple, 1/2 threaded−1/2 beveled may be used in lieu of a full pipe coupling.

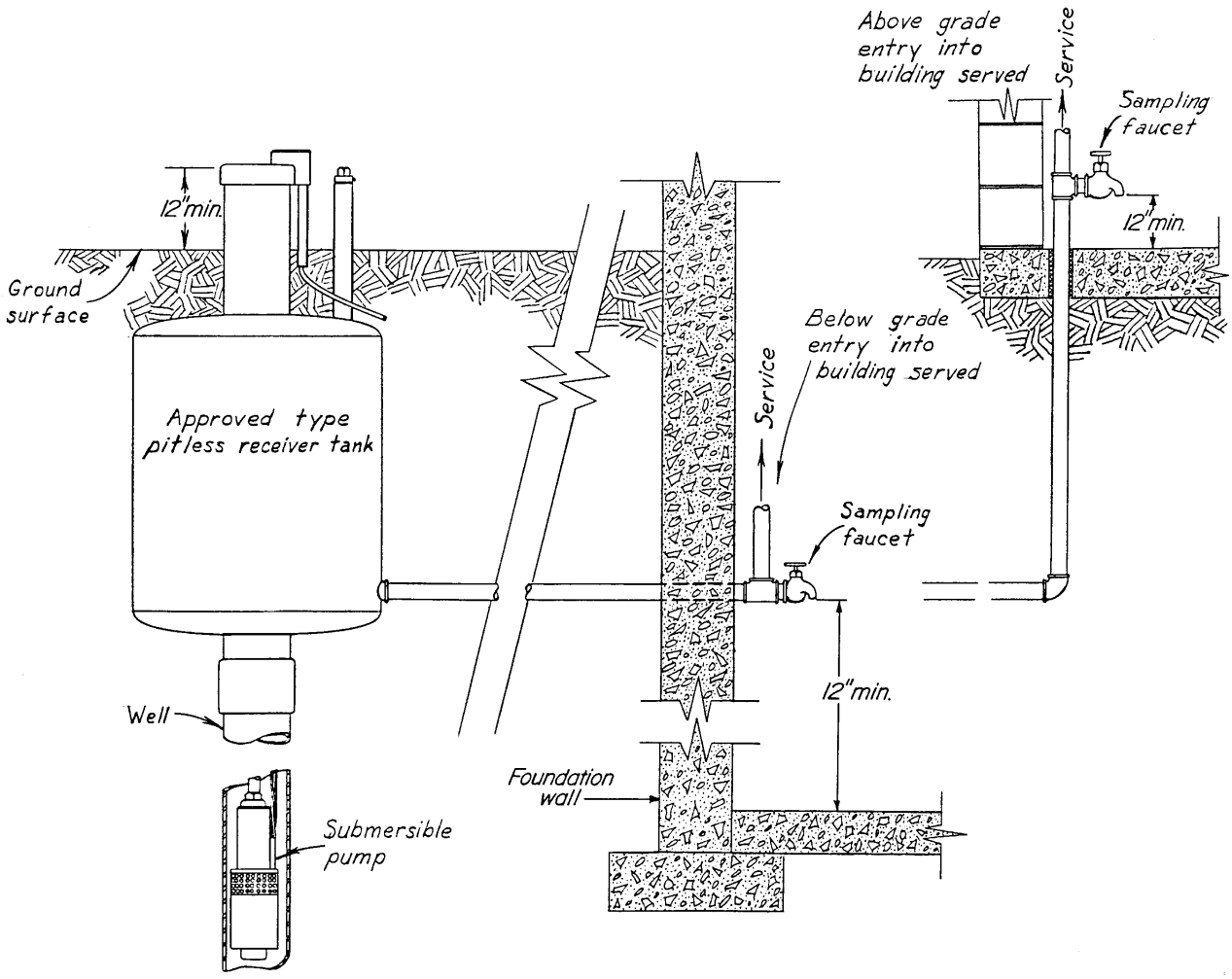

Figure 25. Pump installation for a well with a pitless receiver tank. (For acceptable procedures for connection of the unit to the well casing pipe see s. NR 812.31 (3)).

3. Pressure conduits may terminate at the end of a horizontal pipe entering a basement. Any unburied pump suction pipe in the basement not enclosed in a pressurized conduit shall be at least one foot above the basement floor. A pressure (box) elbow may be used to extend the pressurized conduit to a point above the basement floor. Pressure (box) elbows may be buried.

4. A shallow well pump shall discharge to a seal−cross fitting before being connected to a pressure tank. A control valve may not be installed in the discharge pipe between the pump and the seal−cross fitting.

5. Figures 34 to 36 depict offset pumps with pitless adapters and pressure conduits.

(b) *Pump height.* The pump impeller or cylinder for offset pumps shall be located at an elevation at least one foot above the basement or pit floor.

(3) PUMP INTAKE SETTING. When a well is constructed in an unconsolidated formation, the pump intake shall be set at least 5 feet above the bottom of the well casing pipe or drive pipe casing or above the top of the screen. This is depicted in figure 37. When a pump is replaced and set to a greater depth in a well, an attempt shall be made to ascertain the well construction so this requirement can be made. The pump shall provide an adequate quantity of water, where obtainable, for the intended purpose of the well.

Note: The department may grant variances to the 5−foot requirement of this subsection in low permeability, low yielding formations.

(4) BURIED DISCHARGE LINES FROM SUBMERSIBLE PUMPS. (a) *Pressure requirements.* Buried discharge lines from submersible pumps shall meet the requirements of s. NR 812.28 and shall be maintained under system pressure at all times. Check valves may not be placed in the pump discharge pipe beyond a buried section

Removed by Register March 2015 No. 711. For current adm. code see: http://docs.legis.wisconsin.gov/code/admin_code.

of pipe between a well and a pressure tank. The check valves shall be located at the top of the submersible pump, or in that portion of the discharge pipe before it becomes buried, or on the spool of an approved spool−type pitless unit.

(b) *Separation from sewers.* 1. When a water discharge line crosses a sanitary sewer, the water discharge line piping within 10 feet of the point of crossing shall be installed:

a. At an elevation at least 12 inches above the top of the sewer measured from the bottom of the water line; or

b. At least 18 inches below the bottom of the sewer measured from the top of the water line; or

c. Within a waterproof sleeve made of materials as specified for sanitary building sewers in ch. SPS 384.

2. When a water discharge line extends parallel or roughly parallel with a sewer, the water discharge line shall be separated a minimum distance from the sewer as follows:

a. Water discharge lines 2 1/2 inches in diameter and larger shall be separated at least 8 feet horizontally from a sanitary sewer, measured from center to center of the 2 pipes.

b. Except as provided in subd. 2. c., water discharge lines 2 inches or smaller in diameter shall be separated at least 30 inches horizontally from a sanitary sewer, measured from center to center of the 2 pipes.

c. Water discharge lines 2 inches in diameter and smaller may be installed less than 30 inches horizontally separated from a sanitary sewer if the bottom of the water discharge line is installed at least 12 inches above the sewer, except that portion of the water discharge line within 5 feet of the point where the line enters the building may be less than 12 inches above the sewer.

d. A water discharge line shall be separated from a storm sewer by at least 6 inches.

(c) *Back−flow and back−siphonage prevention.* When a well is installed with a submersible pump and an above ground discharge, it shall contain an UL approved check valve and an air−vacuum relief valve prior to any buried portion of the discharge pipe. When water is pumped to a pond or other body of water, the end of the pump discharge pipe shall be terminated at least 2 feet above the highest elevation of the water in the pond or other body of water.

(d) *Other locational restrictions.* 1. A water discharge line may not be installed in, under or above sanitary sewer manholes, or under a POWTS treatment, holding or dispersal component, including a septic or holding tank, or any in−ground, at−grade, or mound soil absorption unit.

2. A water discharge line shall be separated at least 10 feet horizontally from a POWTS treatment, holding or dispersal component, including but not limited to a septic or holding tank, or any in−ground, at−grade, or mound soil absorption unit.

(5) PUMPS LOCATED BESIDE OR OVER THE WELL. (a) *Shallow−well suction pumps, deep−well piston pumps and deep−well jet pumps.* When the pump unit does not effectively seal the top of the well casing pipe and the well pump suction pipe or jet pump piping emerges from the top, a threaded fitting, or an approved type seal with expandable rubber or neoprene gasket shall be provided between the well casing pipe and the well pump suction pipe or jet pump piping.

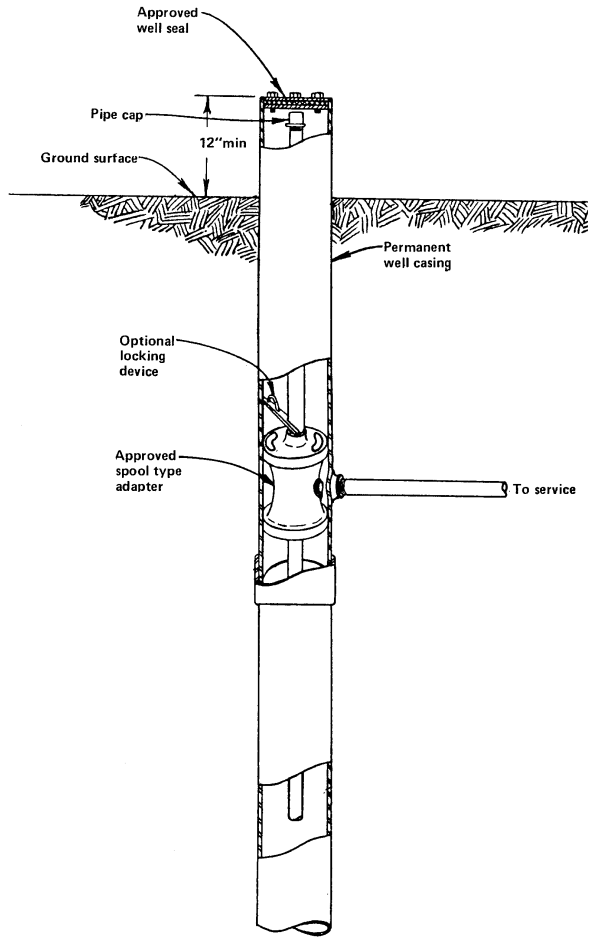

Figure 26. Factory−assembled spool pitless unit installation. (For acceptable procedures for connection of the unit to the well casing pipe see s. NR 812.31 (3)).

(b) *Lineshaft turbine pumps.* 1. General sealing requirements. Lineshaft turbine pumps shall be mounted on the well or over the well casing pipe on a pump platform or well casing pipe flange so as to effectively seal the top of the well. Any opening through the pump discharge head shall be sealed watertight.

2. Specific sealing requirements. The discharge head for a lineshaft turbine pump may be installed over the well casing pipe under the following conditions:

a. A minimum 12 inch high concrete pump platform shall be poured surrounding the well casing pipe. The well casing pipe

Removed by Register March 2015 No. 711. For current adm. code see: http://docs.legis.wisconsin.gov/code/admin_code.

shall project at least one inch up into the pump discharge head as depicted in figure 38A.

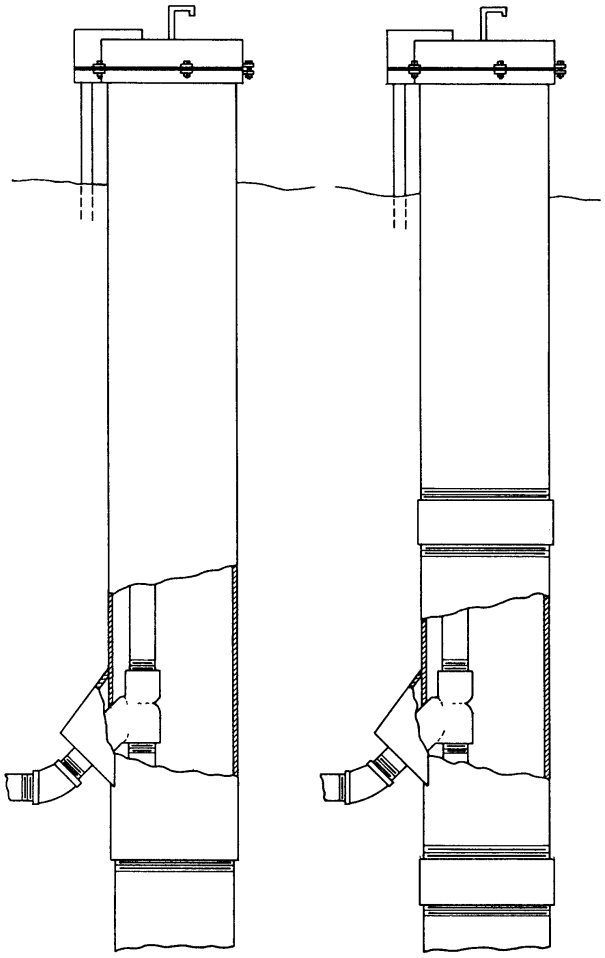

Figure 27. Non−spool type pitless units. (For acceptable procedures for connection of the units to the well casing pipe see s. NR 812.31 (3)).

b. If the pump discharge head does not have enough recess to extend down over the well casing pipe at least one inch, a cast iron or steel subbase sanitary ring at least one inch thick shall be bolted to the base of the discharge head and installed surrounding the well casing pipe. A compressible neoprene gasket shall be installed between the base of the discharge head and the sanitary ring or subbase unless the metal surfaces are machined. This is depicted in figure 38L. As an alternative a flange may be welded to the top of the well casing pipe as depicted in figure 38C.

c. If a concrete pump platform is not to be poured surrounding the well casing pipe, a steel flange shall be welded watertight to the top of the well casing pipe. The base of the discharge head shall be bolted to the casing flange and a compressible neoprene gasket shall be installed between the 2. This is depicted in figure 38D.

d. The well casing pipe may be enlarged above grade to accommodate the pump column flange, by fillet welding or threading a steel flange plate watertight to the top of the well casing pipe. A piece of larger diameter pipe meeting Table V requirements shall then be fillet welded watertight to the top of the flange plate. The pump discharge head shall then be installed as provided in subd. 2. a. to c.

3. Lubrication of lineshaft turbine pumps. a. Water lubricated lineshaft turbine pumps shall be used for potable wells. In water levels deeper than 50 feet, the pump column bearings shall be pre−lubricated prior to pump start up. Lubrication during pump backspin shall be provided if necessary. Water for lubrication of pumps shall be supplied by piping connected to a supplemental pressure system of the potable water supply. Water lubricated lineshaft turbine pumps are recommended for nonpotable wells.

b. Oil lubricated lineshaft turbine pumps may be used for potable wells when the pumping water level is deeper than 250 feet except when the pump operation is expected to lower the water level in the well to a depth less than 5 feet above the bottom of the well casing pipe. Oil lubricated lineshaft turbine pumps may be used for wells provided the lubricants are USDA or FDA approved food contact grade formulations.

Note: Such formulations are usually based on National Formulary white, food grade mineral oil.

Note: The department may allow the installation of oil lubricated lineshaft turbine pumps for potable wells when the pumping water level is less than 250 feet deep when unique circumstances warrant such installation.

(6) DISCHARGE LINES FROM LINESHAFT TURBINE PUMPS. (a) *Pressurized.* Discharge lines from lineshaft turbine pumps that are maintained under system pressure at all times shall contain an air−vacuum relief valve preceding a check valve. A well vent shall be installed in the pump base. This is depicted in figure 39.

Note: Where backspin may be expected to occur, the department recommends a time delay or backspin ratchet be provided to protect the motor in the event the pump controls are energized before the pump stops backspinning.

Removed by Register March 2015 No. 711. For current adm. code see: http://docs.legis.wisconsin.gov/code/admin_code.

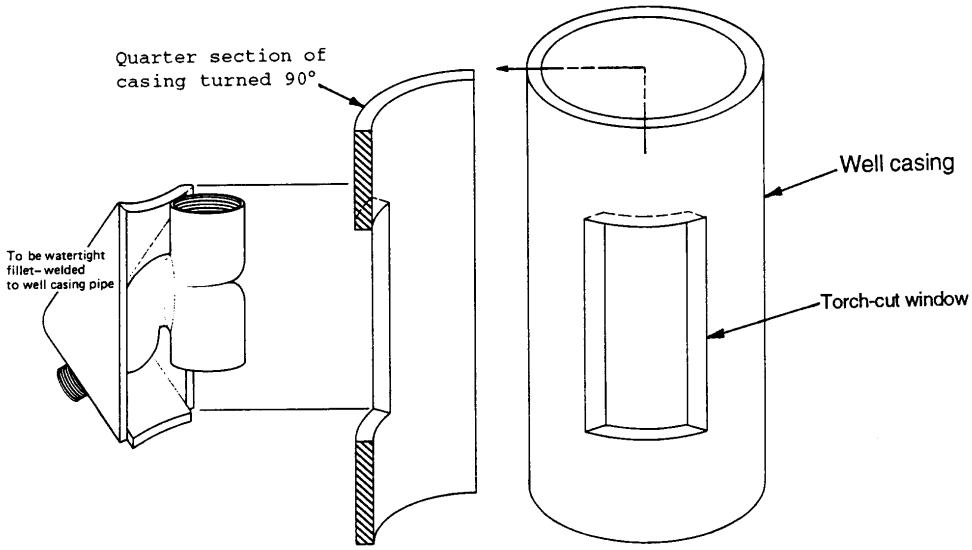

Figure 28. A weld−on pitless adapter.

(b) *Nonpressurized.* Discharge lines from lineshaft turbine pumps shall contain an UL approved check valve and an air−vacuum relief valve near the pump, and prior to any buried portion of discharge pipe. When water is pumped to a pond or other body of water, the end of the pump discharge pipe shall be extended at least 2 feet above the highest elevation of the water in the pond or other body of water.

(7) HAND PUMPS. (a) Hand pump heads shall be designed and fabricated so there are no unprotected openings, other than the spout, to the interior of the pump. The water spout shall turn downward and be closed on top. If a separate watertight port is provided for priming, it shall be sealed watertight when not being used. Unsealed openings may not exist in the pumpbase. If the pump is installed outside, a concrete crack−free watertight pump platform at least 6 feet in diameter, as depicted in figure 40 shall be provided. The top of this platform may be at ground grade, but in any case the platform shall be mounded so that water does not accumulate around the well. If excess water flow from the pump spout is channelized, it shall be directed to a point at least 8 feet from the well with a drain pipe or watertight channel.

(b) Hand pumps shall be connected firmly to the well casing pipe by threading in small diameter well casing pipe or by bolting the pumpbase flange to a well casing pipe flange with a gasket to seal the top of the casing. This is depicted in figure 40. Other types of hand pump bases may be used if they meet the approval criteria in s. NR 812.30 (1) for vermin−proof caps and seals.

(8) CASING NOT PART OF PUMP INSTALLATION. The well casing pipe for any drilled well greater than 2 inches in diameter may not be used as a delivery pipe in the pumping operation, except when the well casing pipe is under continuous pressure as with a packer−jet pump installation.

(9) PUMP INSTALLATIONS FOR FLOWING WELLS. (a) *Underground pipe connections.* Underground pipe connections may only be made to a flowing well with an approved pitless adapter.

(b) *Unprotected suction lines.* An offset shallow well pump may not be connected directly to the buried pipe exiting a pitless adapter or unit of a flowing well or to a pipe extending out of the seal at the top of the well and redirected back into the ground. Buried piping from the flowing well shall discharge to a surge tank having either an overflow pipe or an air−vacuum relief valve installed in the top of the tank. A booster pump shall be connected to the surge tank and discharge into a pressure tank.

(c) *Overflow piping.* 1. When a flowing well is placed in use, the flow from the well shall be regulated by means of a control valve with a screened outlet or with a restricting orifice to prevent waste of water. The control valve shall be restricted as much as possible and closed if the flow ceases.

2. A controlled overflow pipe or other means shall be installed for a flowing well to prevent damage from overflowing water or to prevent freezing of the top of the well.

3. When necessary, overflow piping shall be installed to prevent flow of water up the outside of the well casing pipe or to prevent freezing of water inside the casing. When installed, the flow of water from the discharge pipe shall be limited to a minimum so as to preserve groundwater and water pressure. The overflow pipe shall be installed to extend through the well cap or seal or shall extend off a surge tank in the basement. The overflow pipe may be attached to the outside wall of the well casing pipe if both the point of exit from the well casing pipe and the terminus of the overflow are at least 12 inches above the ground grade and the connection to the well casing pipe is watertight. The overflow pipe shall terminate at least 2 pipe diameters above any drain inlet at the well site, in a building or in a building basement. If the overflow is installed at the well head, the overflow shall extend at least 2 feet above the regional flood elevation and a free air gap of at least 2 pipe diameters above the drain shall be provided. The receiving drain shall discharge to the ground or to a gravel pocket at a point at least 8 feet from the well. A funnel receptacle shall be installed on the inlet of the drain to accept all of the overflow water, to prevent splashing and prevent ponding of water around the well casing pipe. If a pump is installed in the well and the well stops flowing during pumping, a screen shall be installed on the overflow pipe.

(d) *Complying installations.* Illustrations of complying pump installations for flowing wells are shown in figures 41 to 43.

History: Cr. Register, January, 1991, No. 421, eff. 2−1−91; am. (2) (a) 1. and 5., (6) (b) and Figure 32, renum. (4) (b), (6) (c), (7) and (8) to be (4) (b) 1., (7) to (9) and am. (7), (9) (c) 2. and 3., cr. (1) (a) 6., (d) and (4) (b) 2., Register, September, 1994, No. 465, eff. 10−1−94; correction in (4) (b) 1. c. made under s. 13.93 (2m) (b) 7., Stats., Register, May, 2000, No. 533; correction in (4) (b) 1. c. made under s. 13.92 (4) (b) 7., Stats., Register December 2011 No. 672; reprinted to reinsert omitted text in (4) Register January 2012 No. 67; **CR 13−099: am. (1) (a) (intro.), cr. (1) (e), (f), am. (2) (b), cr. (4) (c), (d), am. (5) (b) 3. b., (6) (b), (9) (c) 3., cr. (9) (d) Register September 2014 No. 705, eff. 10−1−14; correction in (9) (d) title made under s. 13.92 (4) (b) 2., Stats., Register September 2014 No. 705.**

NR 812.33 Water storage vessels. The department recommends that pressure tanks be sufficiently sized to provide the minimum pump run time recommended by the pump manufacturer.

Note: Community water systems regulated under ch. NR 811 are required to have a gross pressure tank volume of 10 times the pump capacity.

Removed by Register March 2015 No. 711. For current adm. code see: http://docs.legis.wisconsin.gov/code/admin_code.

(1) PRESSURE TANKS. (a) *General.* Tanks relying on expansion of a flexible membrane within a restricting container, rather than on a water to air interface to provide pressure in the water system, may be used. All pressure tanks for storing potable water under pressure, including those having an air space for expansion, shall be identified by seal, label or plate indicating the manufacturers name and model number and shall meet the following specifications:

1. Pressure tanks to be buried shall be constructed of steel, fiberglass or other comparable non−metallic composite material. Steel tanks with metallic discharge piping, meeting the requirements of s. NR 812.28, shall be used in contaminated soil areas. Steel tanks to be buried shall have a minimum wall thickness of 0.25 inches. Fiberglass or other non−metallic tanks to be buried shall have the structural strength to prevent collapse of the tank. Manufacturer's instructions shall be followed. All buried tanks shall be back−filled in place with sand, compacted in place. Steel pitless receiver tanks, when they are part of approved pitless units attached directly to the well casing pipe, shall also have a minimum wall thickness of 0.25 inches. Any air unloader pipe, tank air valve or any other pipe connection extending up to the ground surface shall be steel pipe meeting the requirements of s. NR 812.28 and shall terminate at least 12 inches above ground grade.

Note: The department recommends that a surface air check kit be installed for a buried pressure tank to check, maintain and adjust the air pressure pre−charge of the tank. Also, in uncontaminated soil areas, pipe and pipe connections to the tank should be made with flexible pipe and fittings meeting the requirements of s. NR 812.28 to minimize strain or pressure on the tank or the tank fittings.

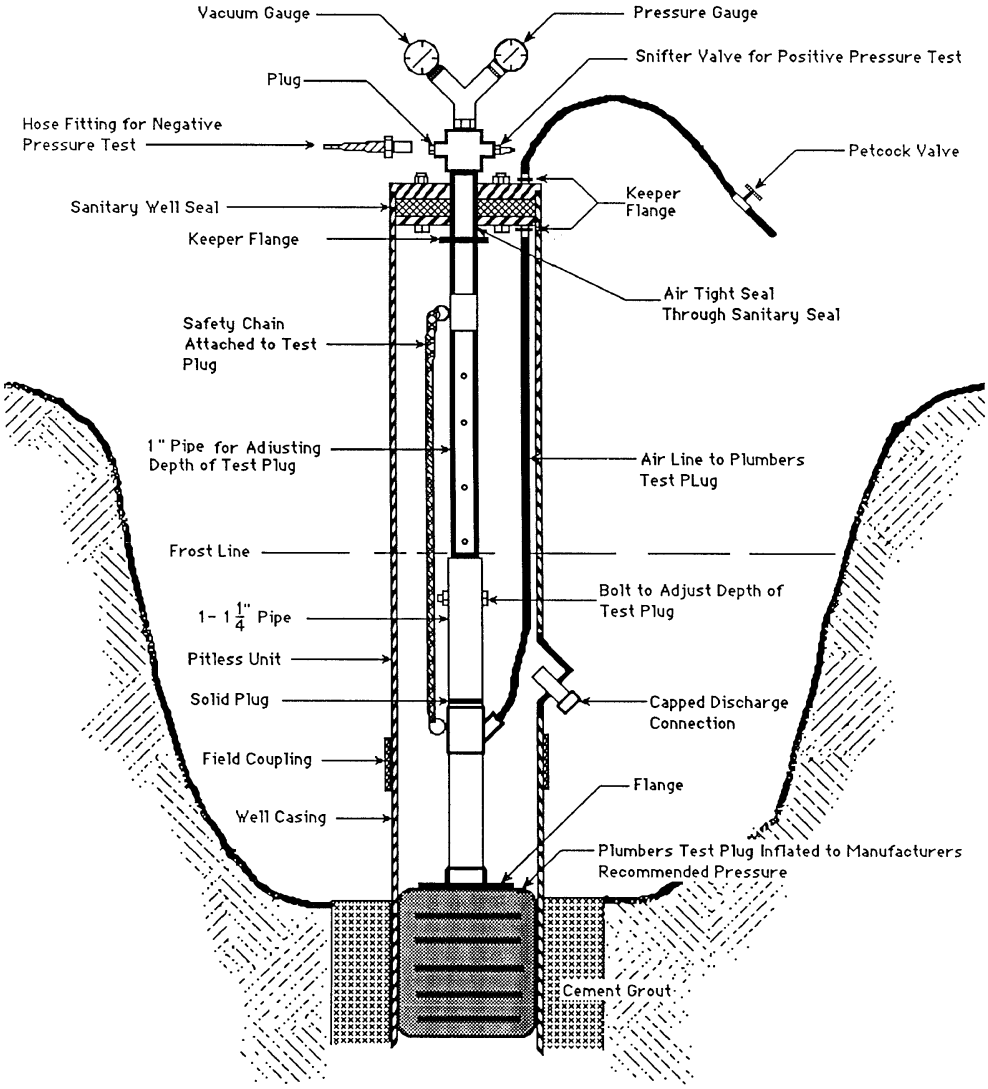

Figure 29. Method for pressure testing a pitless adapter or unit.

2. Pressure tanks having a gross volume in excess of 500 gallons, and not having a water to air interface bladder, shall have the following:

a. If the tank is buried, all electrical controls extended to at least above ground grade.

b. Each tank shall have an access manhole, a drain, and pressure gauge, pressure relief valve, water sight glass and pressure or probe operated controls for the pumps.

c. An air compressor or other suitable means to add air to the tank.

d. Any interior protective materials including but not limited to liners, paints, coatings,or sealants shall be certified for potable water use under NSF Standard 61.

Note: The department recommends that the tank have bypass piping to allow operation of the system while the tank is being repaired or painted.

Removed by Register March 2015 No. 711. For current adm. code see: http://docs.legis.wisconsin.gov/code/admin_code.

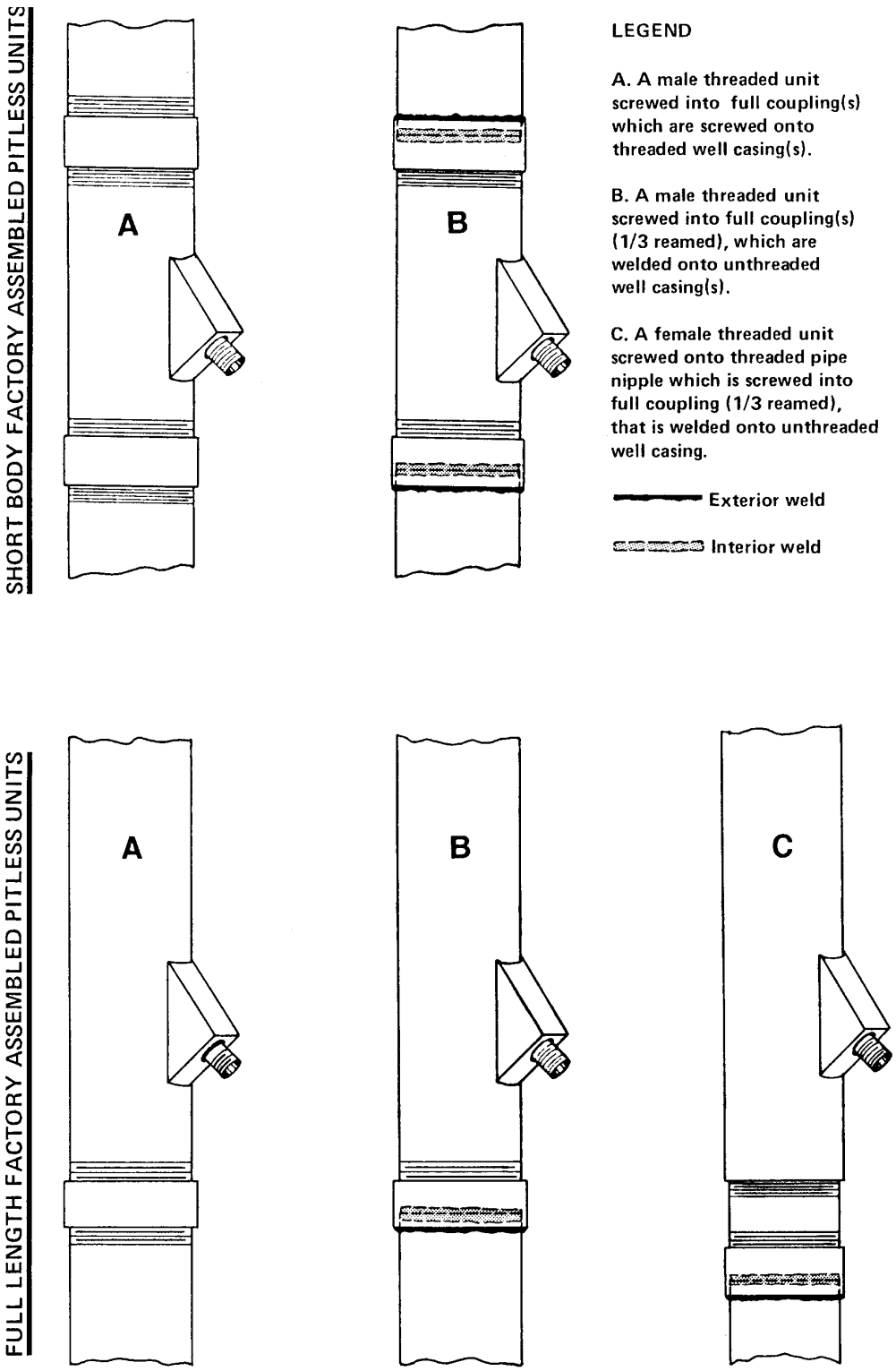

Figure 30. Pitless unit connections for wells with steel well casing pipe.
NOTE: A well casing pipe nipple, 1/2 threaded–1/2 beveled may be used in lieu of a full pipe coupling.

Removed by Register March 2015 No. 711. For current adm. code see: http://docs.legis.wisconsin.gov/code/admin_code.

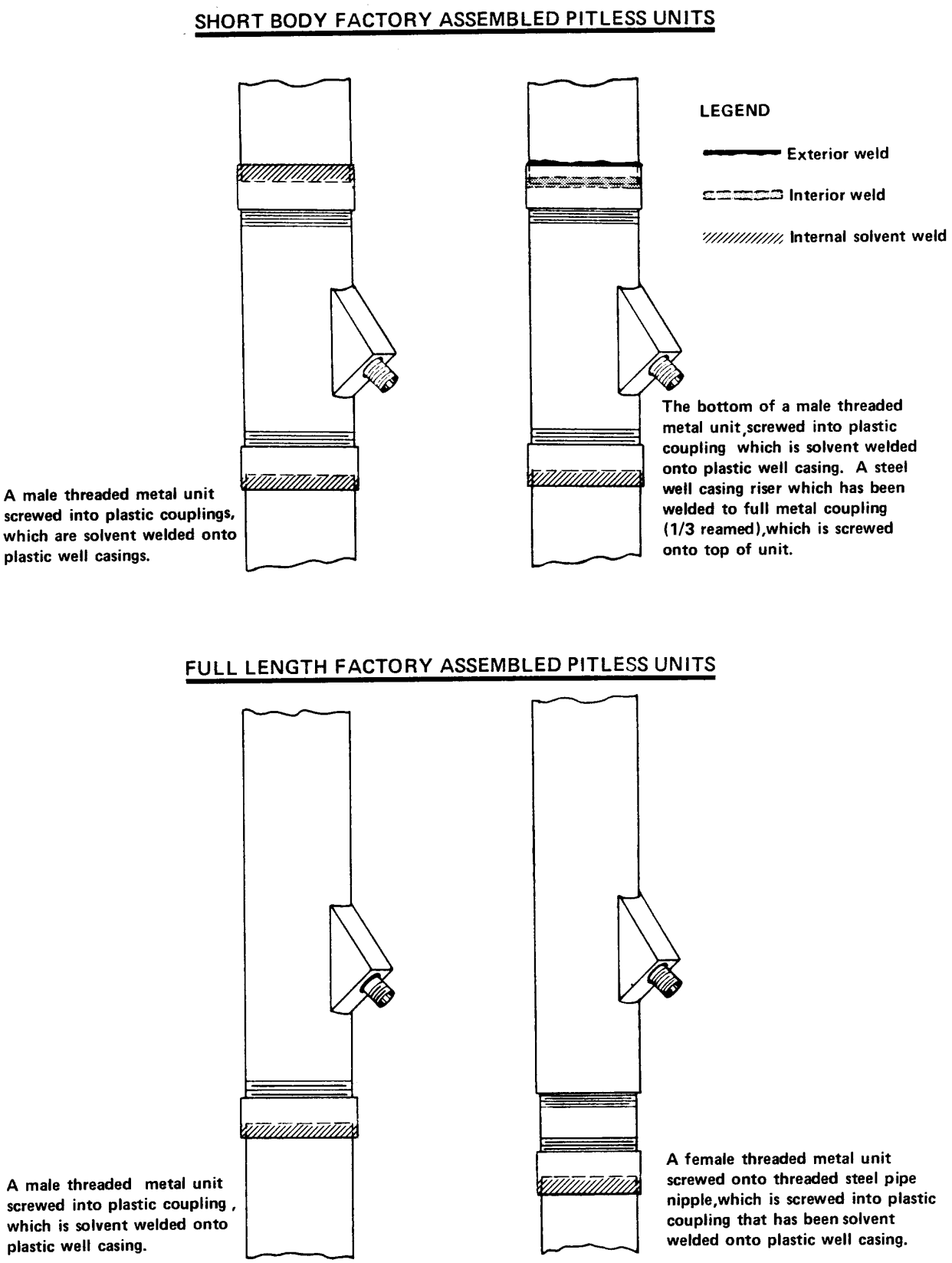

Figure 31. Pitless unit connections for wells with thermoplastic well casing pipe.

Removed by Register March 2015 No. 711. For current adm. code see: http://docs.legis.wisconsin.gov/code/admin_code.

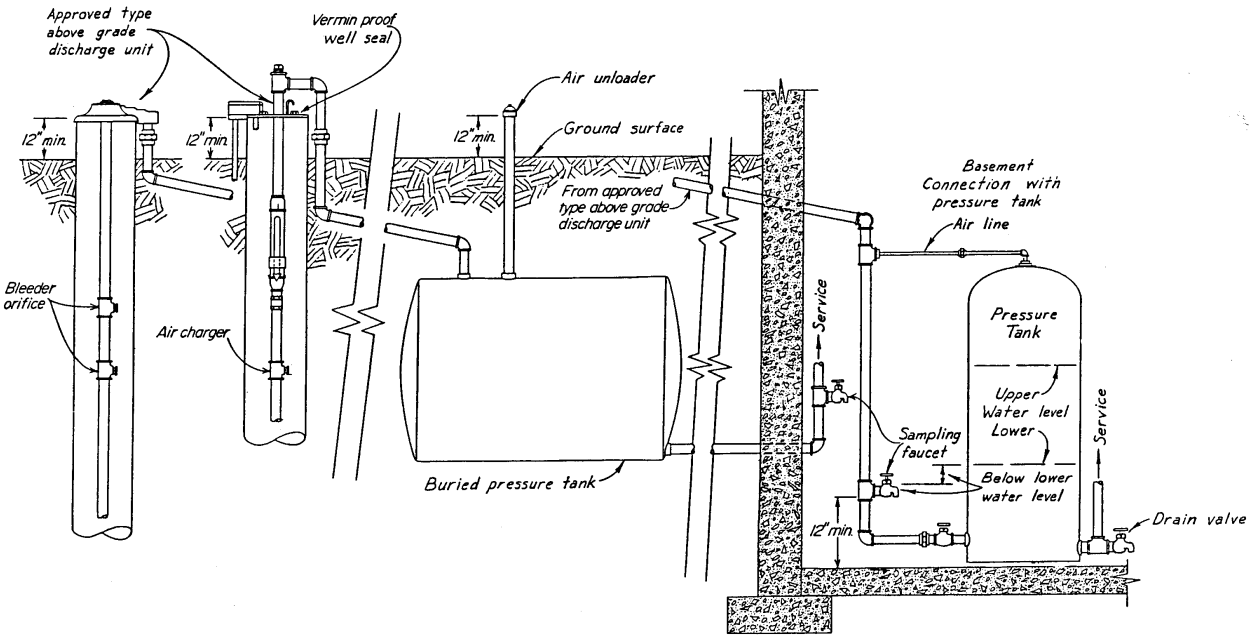

Figure 32. Discharge piping arrangements for wells with above–ground discharges.

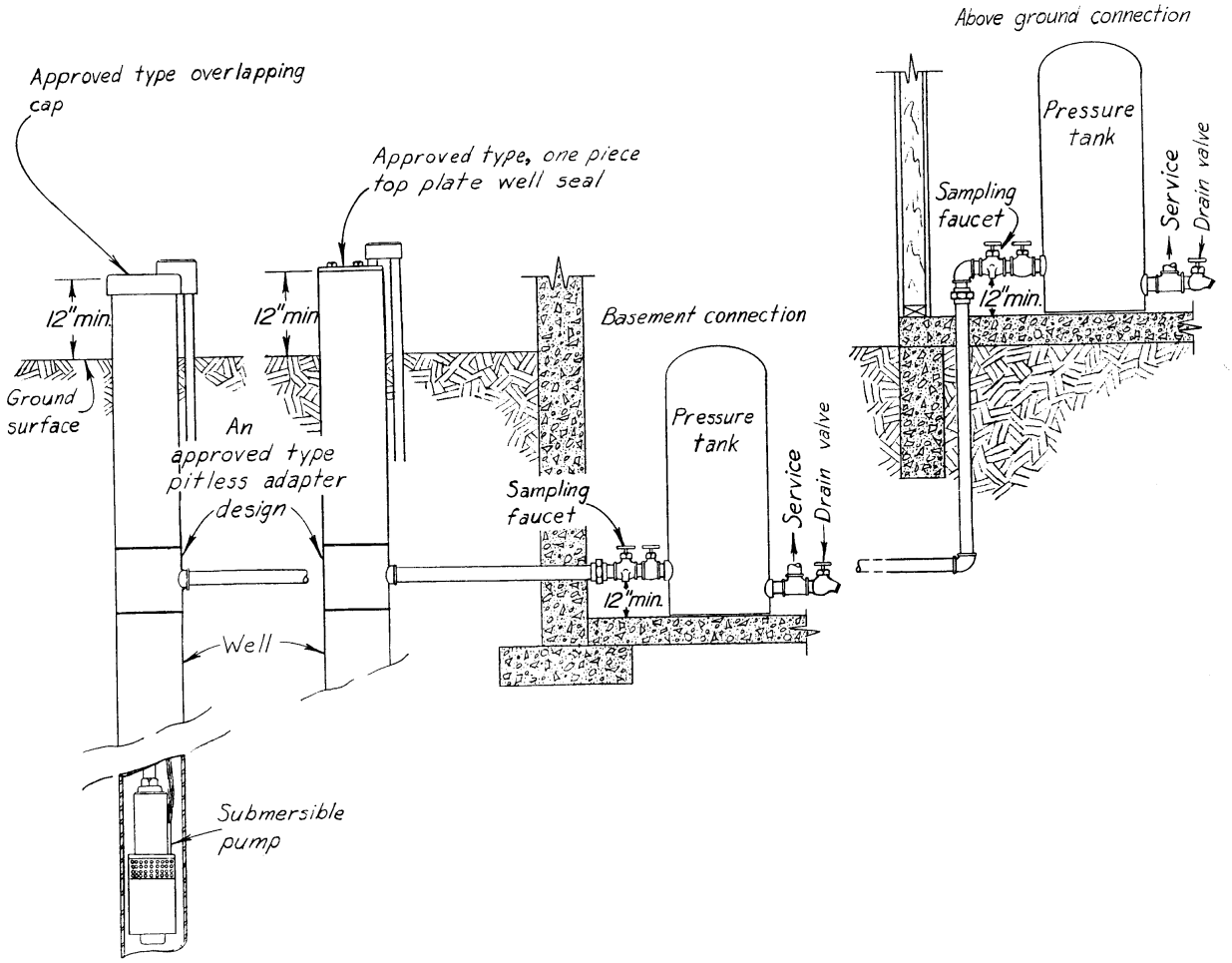

Figure 33. Pump installations for wells with pitless adapters.

Removed by Register March 2015 No. 711. For current adm. code see: http://docs.legis.wisconsin.gov/code/admin_code.

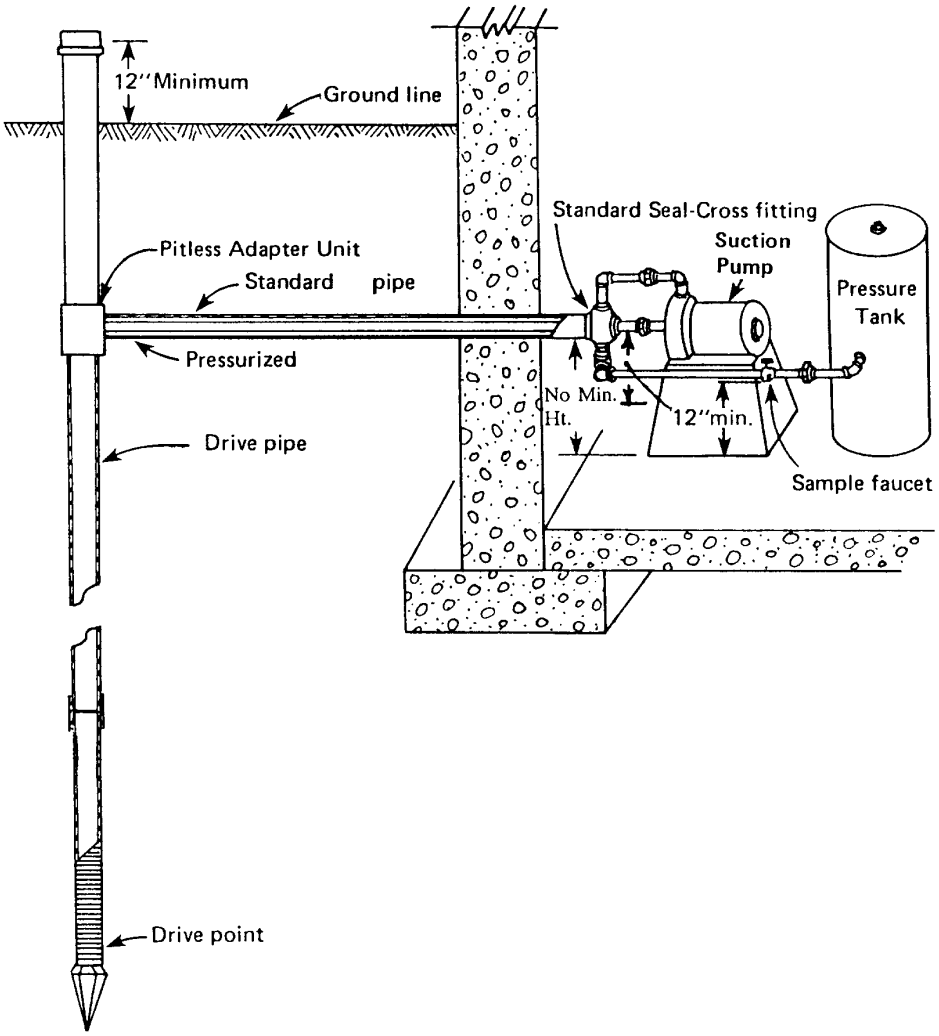

Figure 34. Shallow−well pump installation for a driven−point well. A pressure (box) elbow may be used to extend the pressurized conduit to a point above the basement floor. The pressure (box) elbow may be buried.

Removed by Register March 2015 No. 711. For current adm. code see: http://docs.legis.wisconsin.gov/code/admin_code.

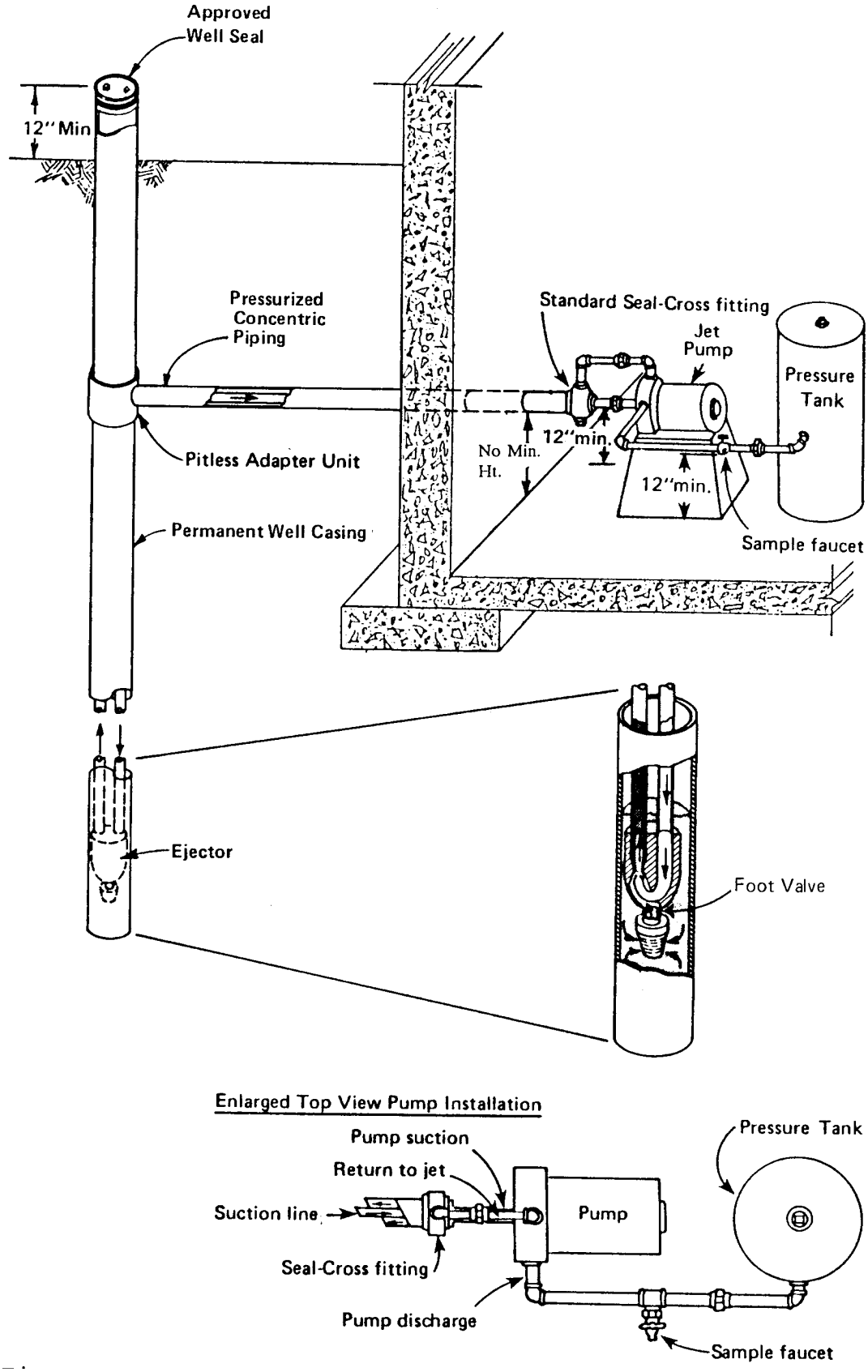

Figure 35. Pump installation for a deep well jet pump assembly with a pressure conduit having a concentric piping arrangement. A pressure (box) elbow may be used to extend the pressurized conduit to a point above the basement floor. The pressure (box) elbow may be buried.

Removed by Register March 2015 No. 711. For current adm. code see: http://docs.legis.wisconsin.gov/code/admin_code.

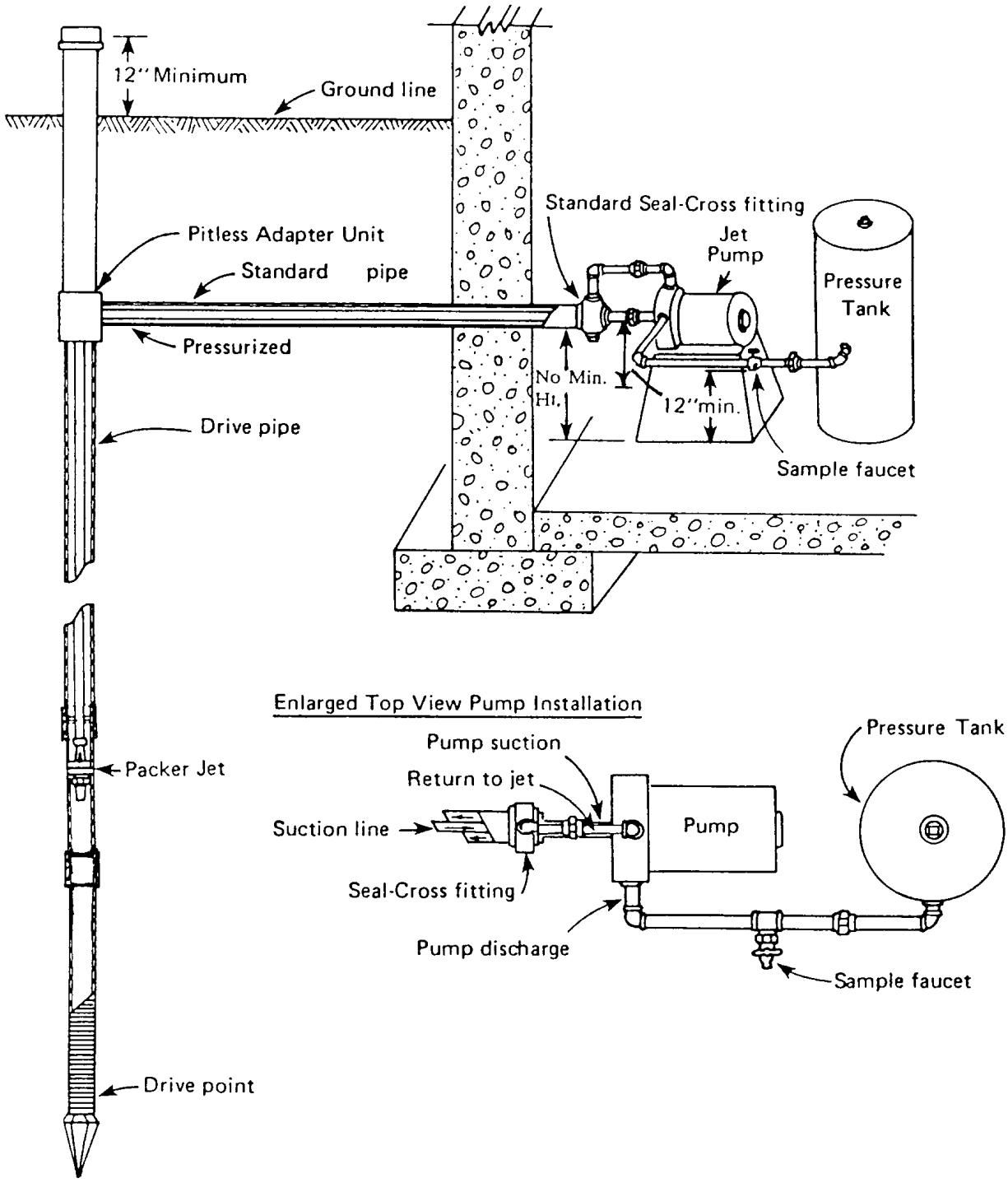

Figure 36. Pump installation for a driven point well with a packer jet assembly. A pressure (box) elbow may be used to extend the pressurized conduit to a point above the basement floor. The pressure (box) elbow may be buried.

Removed by Register March 2015 No. 711. For current adm. code see: http://docs.legis.wisconsin.gov/code/admin_code.

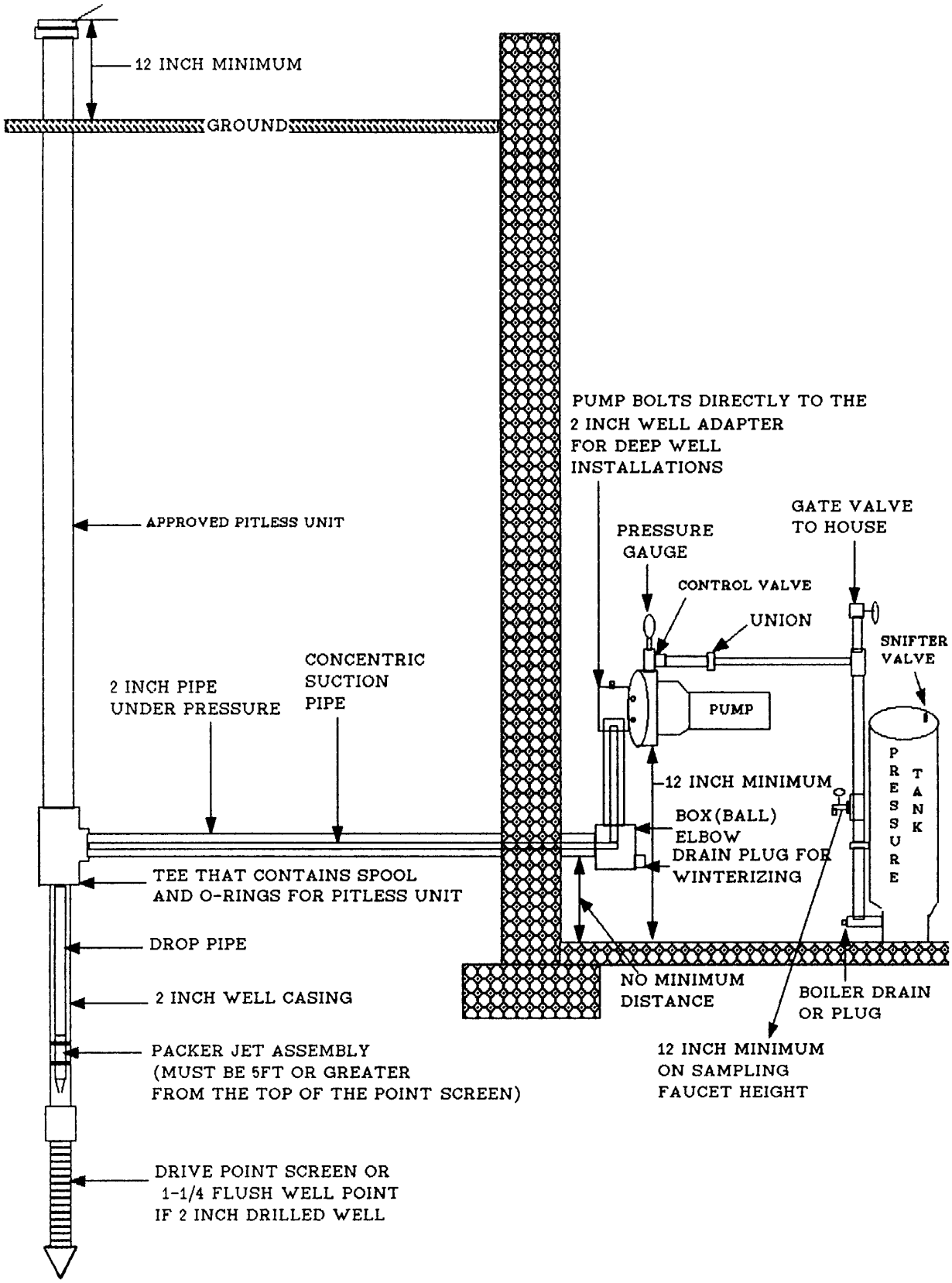

Figure 36a. Alternate pump installation for a driven point well with a packer jet assembly using a box (ball) elbow. Figure prepared by T. Roos.

Removed by Register March 2015 No. 711. For current adm. code see: http://docs.legis.wisconsin.gov/code/admin_code.

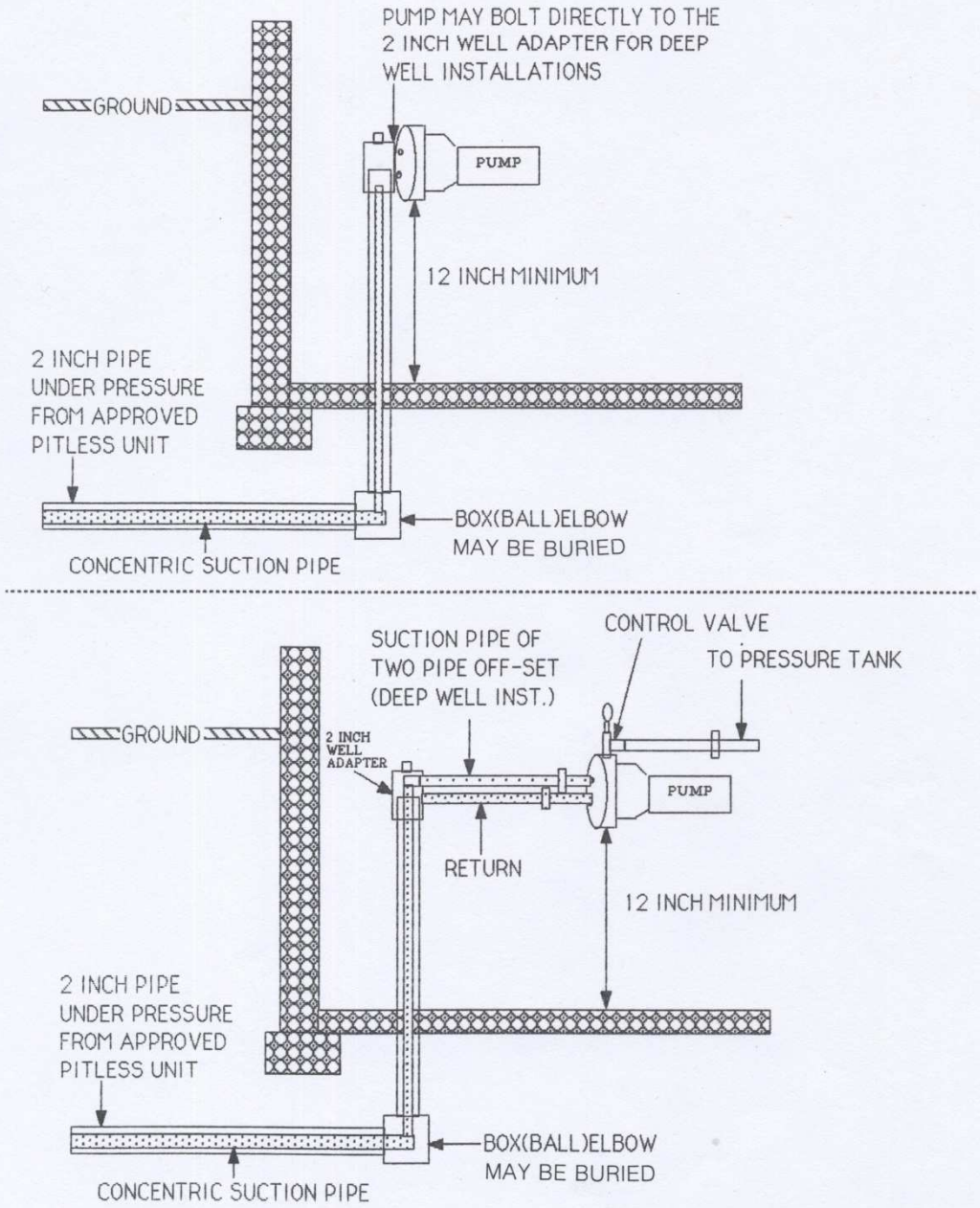

Figure 36b. Offset pump installation discharge piping using a buried box (ball) elbow. Figure prepared by T. Roos.

Removed by Register March 2015 No. 711. For current adm. code see: http://docs.legis.wisconsin.gov/code/admin_code.

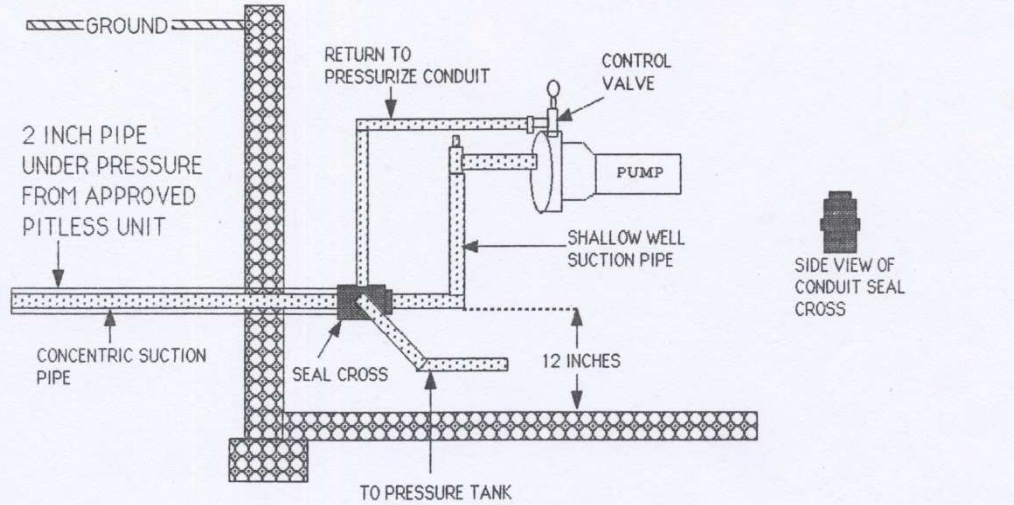

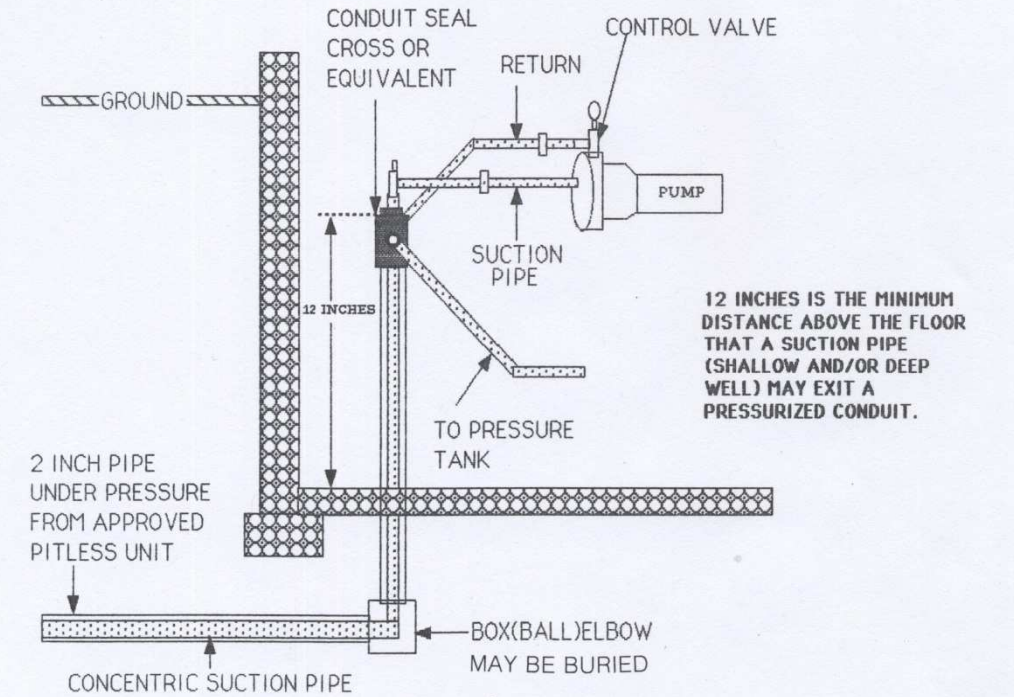

Figure 36c. Alternate offset pump installation discharge piping using a buried box (ball) elbow and seal cross fitting. Figure prepared by T. Roos.

Removed by Register March 2015 No. 711. For current adm. code see: http://docs.legis.wisconsin.gov/code/admin_code.

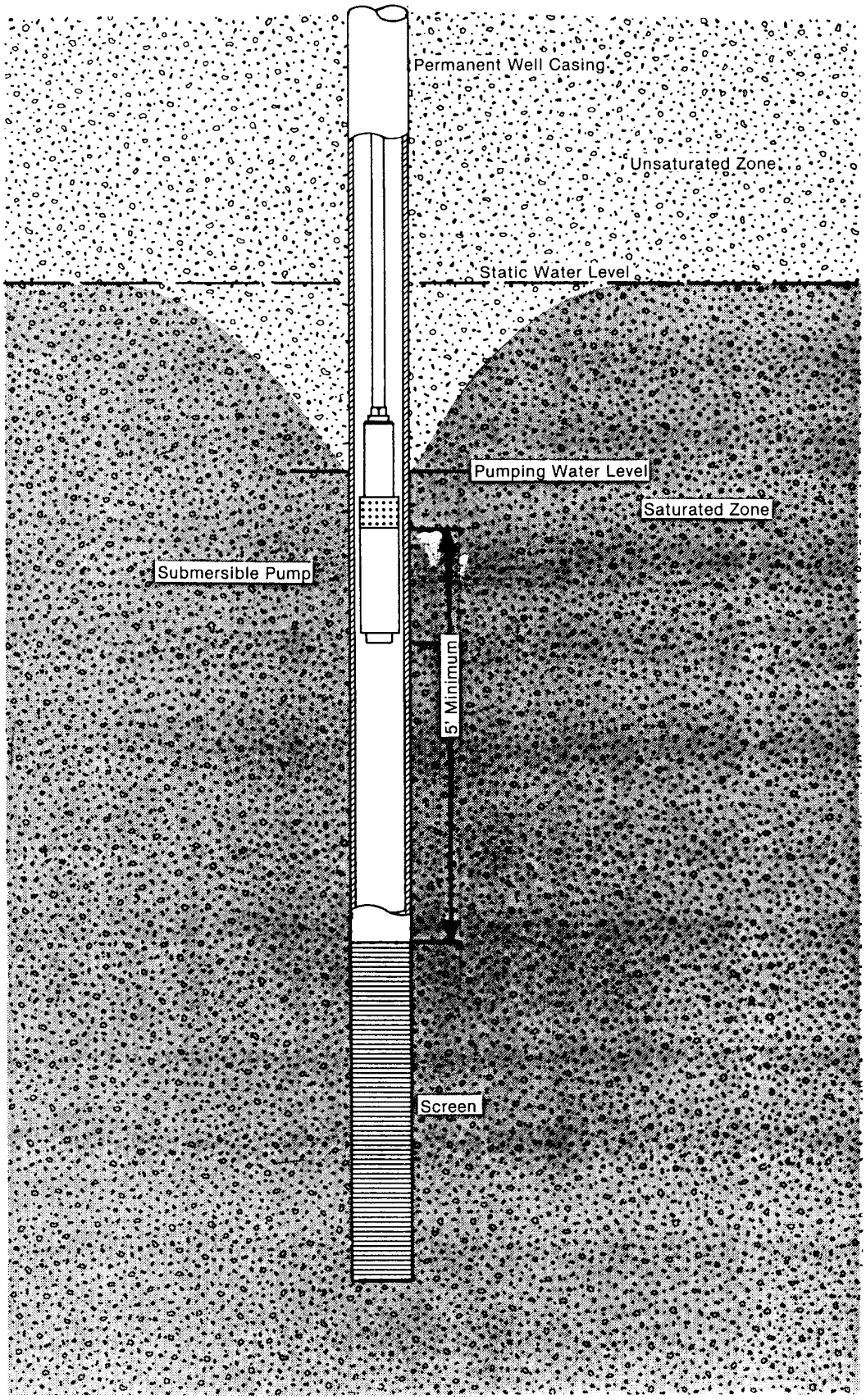

Figure 37. Illustration of requirement that the pump intake shall be installed at least 5 feet above the top of well screen in an unconsolidated formation well.

Removed by Register March 2015 No. 711. For current adm. code see: http://docs.legis.wisconsin.gov/code/admin_code.

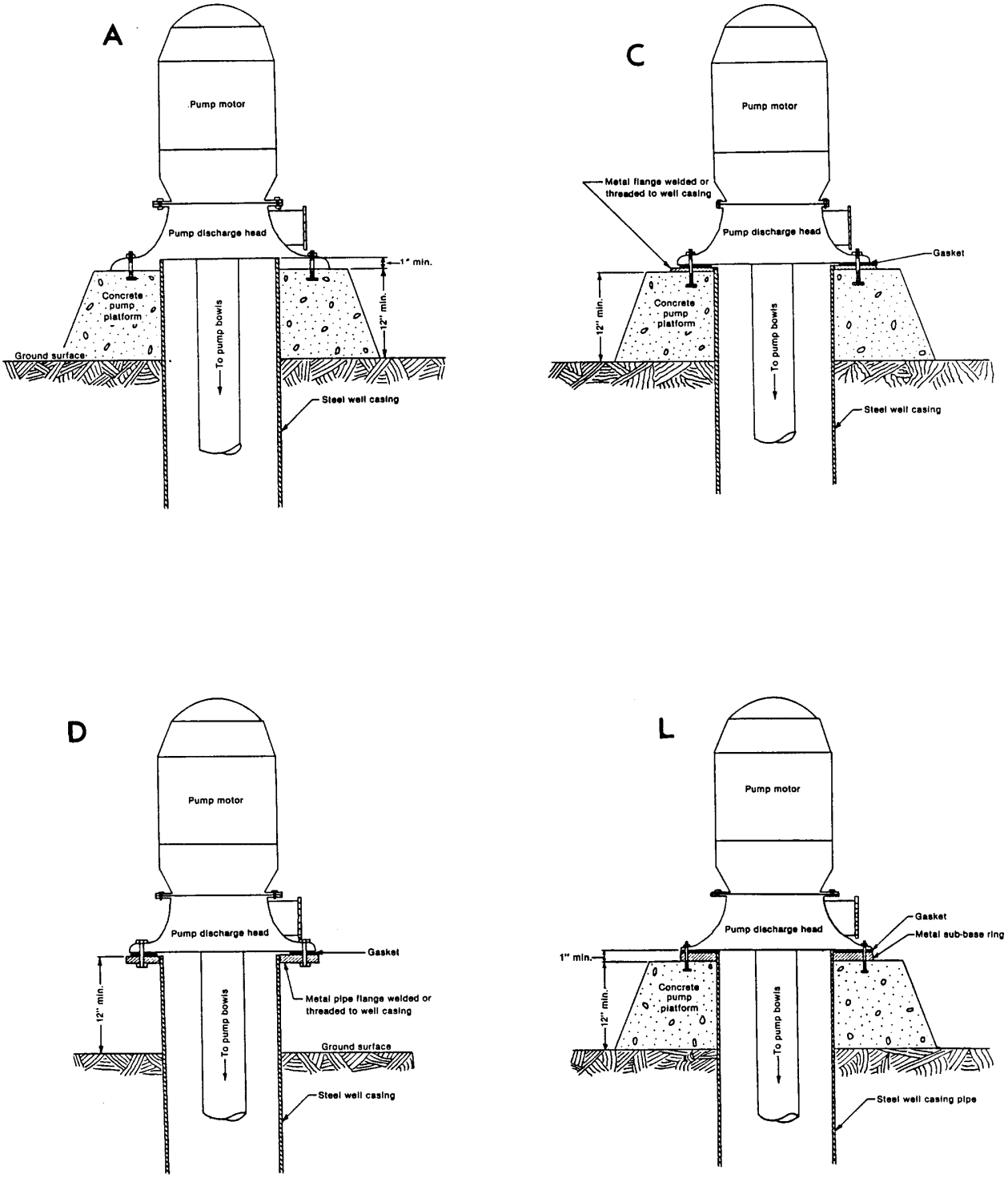

Figure 38. Pump installations for high capacity wells with lineshaft turbine pumps.

Removed by Register March 2015 No. 711. For current adm. code see: http://docs.legis.wisconsin.gov/code/admin_code.

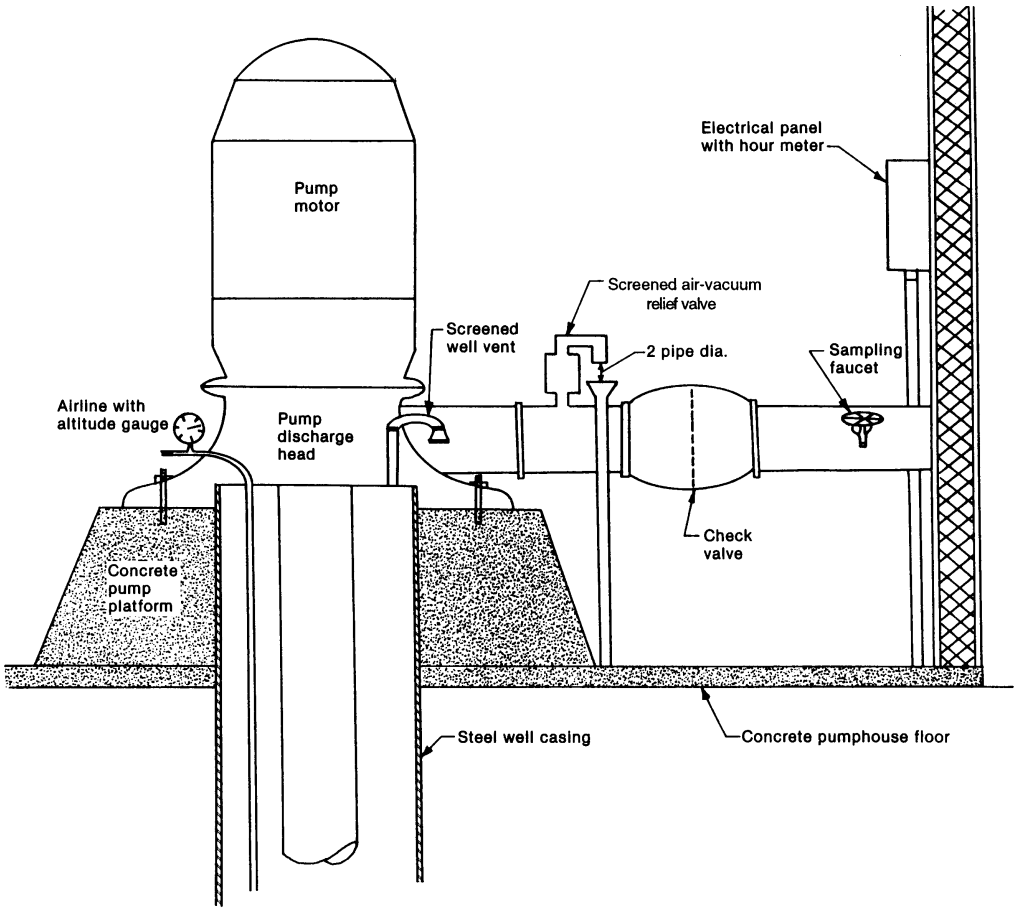

Figure 39. Illustration of a high capacity well pump installation depicting requirements for pumpage and water level measuring devices, well vents and air−relief vacuum breakers.

(b) *Pressure tanks larger than 1,000 gallons gross volume.* An approval shall be obtained for pressure tanks having a gross volume greater than 1,000 gallons. The department recommends that pressure tanks having a volume greater than 1,000 gallons be installed above ground. When approved, the tank shall be installed according to the requirements of par. (a). When tanks of this size are approved for burial, the head end of the tank shall be cradled in a basement wall or in the wall of an approved pit to provide access and shall be constructed to the specifications for pits described in s. NR 812.36 (2) to provide access to the head of the tank. The pit shall have other additional support cradles. This is depicted in figure 44. Pitless receiver tanks having a volume greater than 1,000 gallons may be installed without an access pit.

(2) NONPRESSURE STORAGE VESSELS. Nonpressure storage vessels, designed as part of a potable water supply system, may not be used without approval. Approval is required regardless of whether or not there is a free−air gap in the water inlet line upstream of the vessel. Vessel approval is based on methods of construction and sanitary provisions. The installation of a surge tank is exempt from this approval requirement.

(a) *Surge tanks.* Surge tanks shall meet the requirements for pressure tanks described in s. NR 812.33 (1).

(b) *Reservoirs and elevated storage tanks.* A reservoir may be constructed to store water if it is constructed above the groundwater level and in accordance with this paragraph and figure 44A.

1. General construction specifications. a. Gravity supply pipes shall be located entirely above grade and shall be conducted to the reservoir through the roof or through the curbing for the manhole. The overflow pipe described in subd. 1. b. may be installed at such a level to provide a free−air gap. Buried supply pipe shall be maintained under a continuous pressure head which is greater than the ground surface elevation.

Note: The department recommends that trees and shrubs not be planted within 25 feet of a reservoir.

b. An exposed overflow pipe shall be located just under the roof of the reservoir or outside the elevated storage tank and shall extend at least 8 feet away. The overflow pipe shall terminate with a downturned, screened elbow located at least 12 inches above ground grade. The pipe shall discharge onto a splash plate and have sufficient diameter to permit wasting water at a rate in excess of the inflow from the water source.

2. Steel construction specifications. Steel reservoirs or elevated storage tanks shall meet the requirements of AWWA D100−84 for welded construction or AWWA D103−80 for bolted construction.

3. Access. Water storage structures shall be designed with convenient access for cleaning and maintenance.

4. Concrete construction specifications. Reservoirs constructed of concrete shall meet the following specifications:

a. The supply pipe and overflow pipe shall extend through the structure.

b. An impervious flexible water stop strip for wall construction joint and a reservoir drain facility shall be installed before the concrete is poured.

c. The floor of the reservoir shall be reinforced poured concrete with a thickness of at least 6 inches and shall have a curbing wall 6 inches high and 6 inches thick having a keyway or a flexible water stop strip for a construction joint with the walls.

Removed by Register March 2015 No. 711. For current adm. code see: http://docs.legis.wisconsin.gov/code/admin_code.

d. The walls of the reservoir shall be reinforced poured concrete at least 6 inches thick and terminate above the established ground grade.

e. The roof shall be reinforced poured concrete at least 6 inches thick and shall extend at least 12 inches above established ground grade. An access manhole at least 20 inches in diameter or 20 inches square shall be constructed as an integral part of the roof. The manhole shall have a curbing wall extending at least 12 inches above the roof. The department recommends that the manhole shall be constructed entirely of 4−inch thick reinforced poured concrete, but may be fabricated of 1/4−inch steel or cast iron frame with a gasket and bolted cover. The curbing shall be provided with a snug fitting, overlapping cover with a minimum of 3−inch wide skirted sides. The department recommends that the cover be constructed with welded sheet steel, but may be constructed with reinforced poured concrete. Concrete shall be mixed according to the requirements in s. NR 812.26 (7) (b) 2. or 812.36 (2) (b) 1.

5. A reservoir shall be located according to the requirements of s. NR 812.08, including the minimum separation distance requirements of s. NR 812.08 (4) established for existing or proposed potential sources of contamination.

(3) PAINTING AND CATHODIC PROTECTION. Metal surfaces of reservoirs or elevated storage tanks, to be in contact with potable water, shall be protected by paints, other protective coatings, or by cathodic protection except when documentation is provided to the department that the source water will not be aggressive or corrosive to the metal surfaces. Paint or coating systems shall conform with AWWA standard D102 and shall be NSF approved for use with potable water. When cathodic protection is to be provided, it shall be designed and installed by competent technical personnel. A copy of the AWWA standards are available for inspection at the office of the department of natural resources, the secretary of state's office and the office of the revisor of statutes, and may be obtained for personal use from AWWA, Inc., 6666 W. Quincy Avenue, Denver, Colorado 80235.

History: Cr. Register, January, 1991, No. 421, eff. 2−1−91; am. (1) (a) (title), 1., (b), (2) (b) 1. a., Register, September, 1994, No. 465, eff. 10−1−94; am. (1) (a) (intro.), 1., Register, September, 1996, No. 489, eff. 10−1−96; correction in (3) under s. 13.92 (4) (b) 6., Stats., Register July 2010 No. 655; **CR 13−099: am. (1) (a) 1., cr. (1) (a) 2. d., r. and recr. Figures 36b., 36c., am. (1) (b), (2) (intro.), cr. (2) (b) 5., am. (3) Register September 2014 No. 705, eff. 10−1−14.**

NR 812.34 Sample faucets. In all pressure water systems, whether installed before or after 1991, provision shall be made for collection of water samples directly from the well by installation of a sampling faucet at or upstream of the pressure tank and upstream of any water treatment equipment. The sample faucet shall be installed at least 12 inches above the floor, have a downturned spout and be in an accessible location. All sample faucets shall be metal and shall have an inside diameter of at least one−quarter inch. The sample faucet shall have a smooth end. Threaded faucets and threaded drain valves may not be installed in place of a smooth end sample faucet even if the threads have been filed off. Petcocks may not be used as sample faucets. Any faucet used for recirculation shall be installed with a hose connection vacuum breaker. Sample faucets shall be installed in the pump discharge piping upstream of the pressure tank entry except:

(1) When a buried pressure tank, a pitless receiver tank or an above ground discharge unit is installed, the sampling faucet shall be installed immediately following the point of entry into the building or building basement.

(2) When an approved above ground discharge unit is used and the pressure tank is in the basement, the sampling faucet shall be installed in the service pipe from the tank, at least l2 inches above the floor. The sampling faucet may be placed in the pump discharge line if there is no loss of air from the system when the faucet is opened.

History: Cr. Register, January, 1991, No. 421, eff. 2−1−91; am. (intro.), (1), Register, September, 1994, No. 465, eff. 10−1−94; **CR 13−099: am. (title), (intro.) Register September 2014 No. 705, eff. 10−1−14.**

NR 812.35 Yard hydrants. Yard hydrants may be installed in a water system provided they are not installed in or on a well and have been approved by the department of safety and professional services for this purpose. All backflow prevention devices shall comply with ch. SPS 384 and shall be installed and maintained in accordance with ch. SPS 382.

(1) Yard hydrants having hose threaded outlets shall either:

(a) Have a hose connection vacuum breaker installed on the hose threads, or

(b) Have a reduced pressure principle backflow preventer or a backflow preventer with intermediate atmospheric vent installed in the water supply pipe which serves only the yard hydrant or hydrants.

Removed by Register March 2015 No. 711. For current adm. code see: http://docs.legis.wisconsin.gov/code/admin_code.

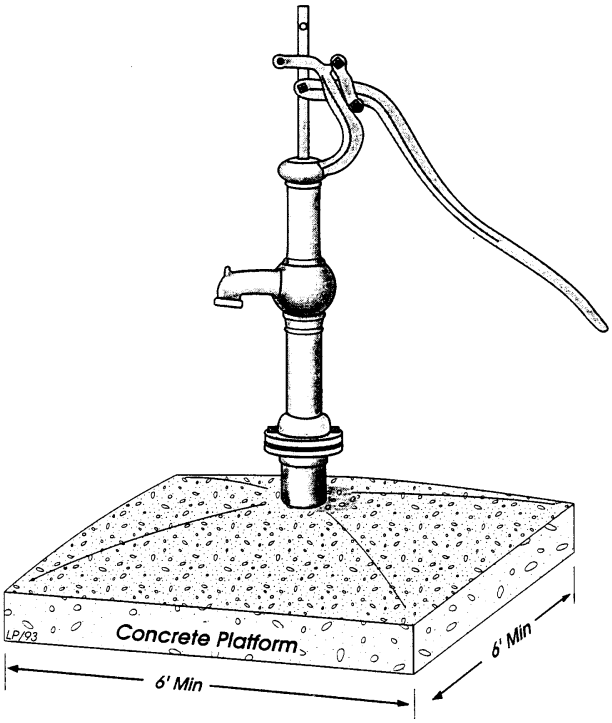

Figure 40. Required watertight concrete pump platform for hand pumps installed outside. The platform shall be mounded so water does not accumulate around the well casing.

Removed by Register March 2015 No. 711. For current adm. code see: http://docs.legis.wisconsin.gov/code/admin_code.

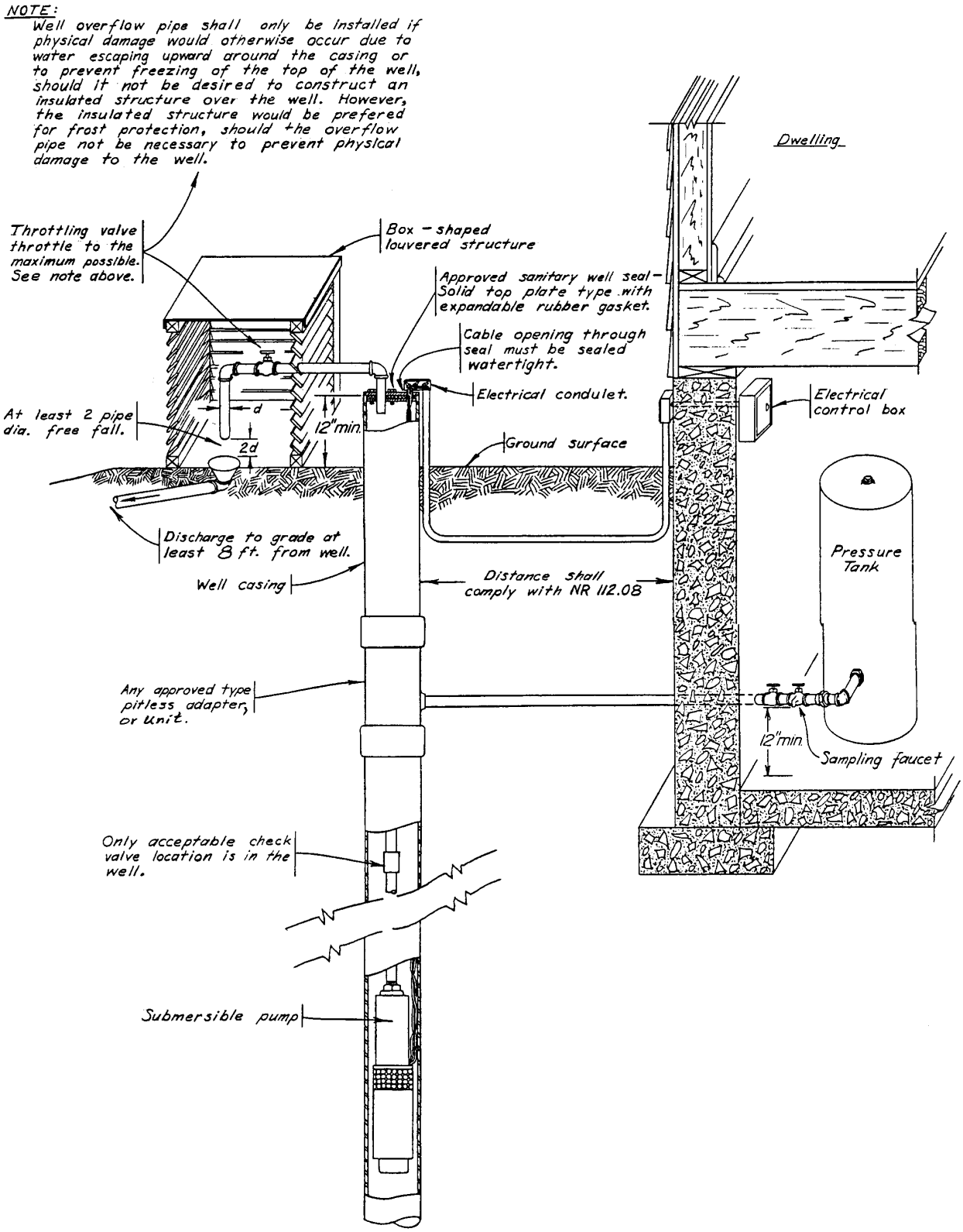

Figure 41. Overflow piping arrangement for a flowing well with a submersible pump.

Removed by Register March 2015 No. 711. For current adm. code see: http://docs.legis.wisconsin.gov/code/admin_code.

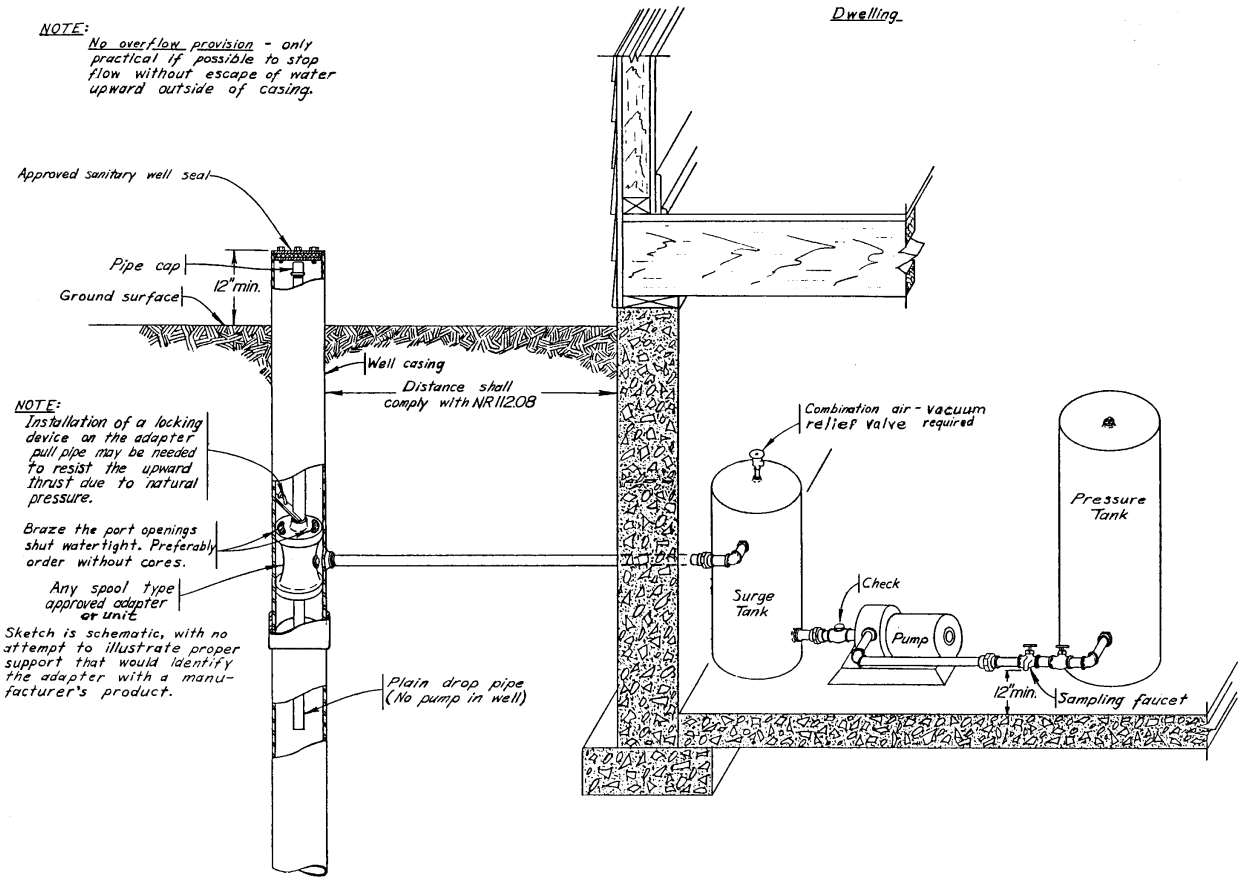

Figure 42. Flowing well installation with a surge tank instead of an overflow piping arrangement.

(2) Yard hydrants having hose threaded outlets may be installed without additional backflow protection if the outlet of the yard hydrants complies with the air gap requirements in s. SPS 382.41.

Note: Chapter SPS 384 requires that backflow prevention devices such as hose connection vacuum breakers, backflow preventers with intermediate atmospheric vent and reduced pressure principle backflow preventers must be reviewed by and receive device approval from department of safety and professional services. Chapter SPS 382 requirements do not allow backflow preventers to be buried or installed in a pit. Installation of hose connection vacuum breakers in areas subject to freezing must be of the type that allows draining. Department of safety and professional services plan approval must be received prior to the installation of a reduced pressure principle backflow preventer. Reduced pressure principle backflow preventers must be installed by a plumber licensed under ch. 145, Stats. and listed by department of safety and professional services to do such work. The device must be tested at least once a year by a department of safety and professional services listed backflow prevention device tester.

History: Cr. Register, January, 1991, No. 421, eff. 2–1–91; correction in (intro.) made under s. 13.93 (2m) (b) 12., Stats., Register, September, No. 465**;** corrections made under s. 13.93 (2m) (b) 4., Stats., Register, September, 1996, No. 489; correction in (intro.) made under s. 13.93 (2m) (b) 7., Stats, Register, May, 2000, No. 533; correction in (intro.), (3) made under s. 13.92 (4) (b) 7., Stats., Register December 2011 No. 672; **CR 13–099: am. (intro.), r. (1), renum. (2), (3) to (1), (2) and am. Register September 2014 No. 705, eff. 10–1–14.**

NR 812.36 Pits. (1) APPROVALS TO CONSTRUCT PITS. A pit structure that is completely or partially below the ground surface or below a building floor used for the housing of wells, offset pumps, pressure tanks or heads of pressure tanks may not be constructed without prior written approval. Subsurface well or pump rooms (alcoves) adjoining a basement are pits. Applications shall be submitted to the department on forms provided by the department. Pits used only for the housing of valves are exempt from the requirements of this section except that a pit used for this purpose shall be watertight, may not be connected to a sewer, shall be drained to permeable soil or to the ground surface and may not be subject to flooding.

(2) SPECIFICATION FOR NEW PITS. Pits shall conform to figure 45 and the following minimum specifications:

(a) *Dimensions.* 1. Area. Five square feet of free floor area shall be provided for each square foot of area required for any pump installation equipment. The inside area of a pit may not be less than 24 square feet.

2. Width. The width of the pit shall be not less than 2/3 of the length.

3. Height. The height inside shall be at least 6 feet, but not less than 6 inches higher than any equipment installed in the pit.

4. Walls, floor and roof thicknesses. The wall thickness shall be at least 6 inches and waterproof. The floor thickness shall be at least 4 inches when the floor bears on a footing. Floors used as a wall footing shall be at least 6 inches thick from the outside edge of the floor to a point at least one foot inside the wall of the pit. The roof thickness shall be at least 5 inches.

(b) *Construction.* 1. Material. The pit shall be constructed of reinforced poured concrete thoroughly puddled in place. The concrete shall be prepared according to the specifications of s. NR 812.26 (7) (b) 2. or by using clean water and washed sand and gravel or crushed rock in the following proportions: 1 part cement, 2 parts sand and 3 parts gravel. The water–cement ratio may not exceed 6 gallons of water per 94 pounds of cement. A 6 bag concrete mix per cubic yard with a 28–day design strength of at least 3,000 lbs. per foot and a slump test of no more than 3 inches may be used.

2. Watertight juncture. The junction of walls, floor and roof shall be made watertight by use of water stops or keyed joints. Conduits or similar connection with the pit shall be watertight.

Removed by Register March 2015 No. 711. For current adm. code see: http://docs.legis.wisconsin.gov/code/admin_code.

3. Reinforcement. The deck or pit roof and walls of the pit structure shall be reinforced with bars or wire mesh to insure strength and durability.

4. Elevation of pit roof. The pit roof, deck or wall top shall be above the ground surface.

(c) *Manhole opening.* 1. Placement. The pit shall be provided with a manhole opening. The opening shall be located directly over the well, unless the well casing pipe itself extends through the roof, or if a capped section of well casing pipe at least equal in diameter to the well casing pipe is cast into the pit roof directly over the well.

2. Size. The manhole opening shall be at least 20 inches square or 20 inches in diameter and shall be sufficiently large to allow entrance or removal of any unit or equipment to be installed in the pit.

3. Curbing. The manhole opening shall be provided with a raised concrete curbing at least 4 inches thick. The curbing shall extend at least 4 inches above the pit roof.

4. Cover. A structurally substantial, watertight, overlapping, tight–fitting, cover with skirted sides at least 3 inches high shall be provided for the manhole. The department recommends that a welded sheet steel cover be used, but a cover made out of lumber and covered in turn with sheet metal or tin may be acceptable if waterproof.

5. Exceptions. A watertight, cast iron manhole frame and cover with a gasket may be substituted for a curbed manhole. When the pit is a subsurface pumproom (alcove) adjoining a basement foundation, a watertight concrete plug may be substituted for a curbed manhole if the roof of the pit terminates in a walkway, breezeway, patio or porch, providing the pit is reasonably accessible.

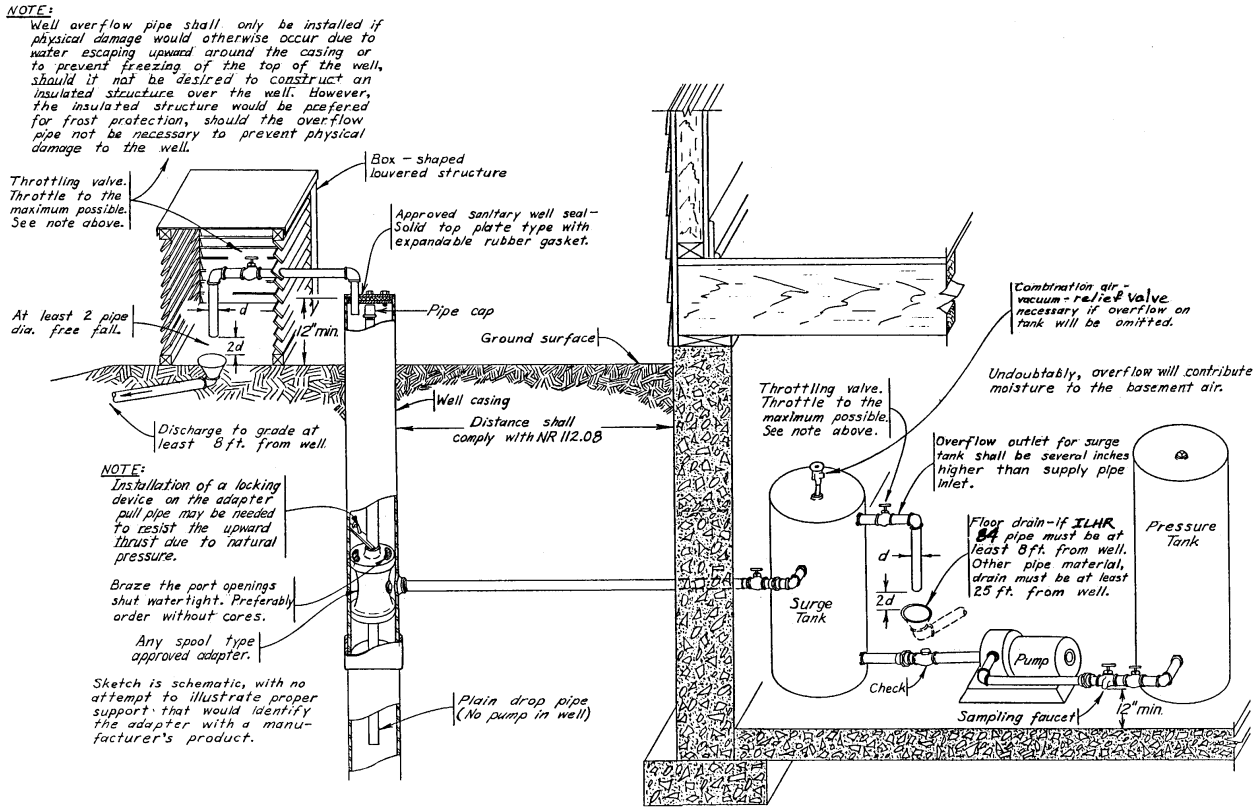

Figure 43. Overflow piping arrangement for a flowing well with a surge tank and with no pump.

(d) *Drainage.* 1. Gravity drain. The pit shall be drained by a watertight gravity drain discharging to the ground surface at a point at least 8 feet from the well. The drain shall be constructed of materials conforming to ch. SPS 384 and shall have a minimum diameter of 2 inches with a screened outlet.

2. Pits adjoining basements (alcoves). The subsurface pumproom pit may be drained to the basement floor if the pit floor slopes toward the basement and if the basement is adequately drained. If the basement is not adequately drained, a gravity drain shall be provided for the pit. The pit floor shall be one foot above the basement floor.

Note: Pits adjoining basements (alcoves) are "subsurface pumprooms".

(e) *Termination of well casing pipe.* The well casing pipe shall terminate at least 12 inches above the pit floor and be provided with an approved watertight seal.

(f) *Venting.* 1. Pit. A pit should be vented with 2, 2–inch diameter or larger galvanized steel pipes located in opposite corners, one pipe to extend to within one foot of the pit floor and the other to extend only through the pit roof. If used, the upper end of the vent pipes shall terminate with return bends and screened outlets.

2. Well. The well vent pipe shall extend to the top of the pit and terminate with a return bend and a screened outlet.

(g) *Pump installation.* The free space in the pit around the well casing pipe shall be maintained so that the top of the well casing pipe is readily accessible for installation, adjustment or removal of an approved well seal and for the installation and removal of the pump or piping.

(3) DRIVEWAY RAMPS. If a well must be located in a driveway, parking area, walkway or other high traffic area due to small lot size, accessibility constraints or inability to otherwise meet the minimum separation distance requirements of s. NR 812.08, the well may be contained within a driveway ramp structure without department approval provided the driveway ramp meets the specifications of this subsection.

Removed by Register March 2015 No. 711. For current adm. code see: http://docs.legis.wisconsin.gov/code/admin_code.

(a) *Relation to floodplain.* Driveway ramps may not be constructed in a floodway or floodplain.

(b) *Construction specifications.* Driveway ramps shall conform to figure 45 and the following minimum specifications:

1. 'Nonpressure conduit'. If the well has a nonpressure conduit, the pump installer shall evaluate the integrity of the nonpressure conduit and its connection to the well casing pipe by performing a pressure test. If the nonpressure conduit fails the pressure test, the nonpressure conduit shall be eliminated and the installation shall be changed to a pitless connection in accordance with s. NR 812.42 (11) (e).

2. 'Construction'. The top of the well shall be contained within a manhole and frame that is set on a concrete ring. The manhole shall be water−tight with a gasketed seal and shall be bolted securely to the frame. The manhole must be surrounded by concrete or asphalt that is sloped so that surface water does not flow toward or pond on the manhole cover.

3. 'Height of well'. The top of the well casing pipe shall terminate a minimum of four inches above the original grade of the driveway, parking lot or sidewalk.

4. 'Well seal'. The top of the well shall be sealed watertight with an approved sanitary well seal.

5. 'Conduit for electrical cable'. Pump electrical cable shall be protected in a metal or plastic conduit. The conduit shall be threaded tightly into the well cap or seal or shall be sealed in an equivalent manner. If the electrical wires are buried beside the well, the bottom of the conduit shall extend below the floor of the driveway ramp and shall be sealed watertight. If the conduit extends from the well seal to a basement, the end of the conduit shall be sealed in a watertight, vermin−proof manner.

6. Wells with nonpressure conduits must be vented to the ceiling in the basement and shall have the pump cables enter through a conduit.

Removed by Register March 2015 No. 711. For current adm. code see: http://docs.legis.wisconsin.gov/code/admin_code.

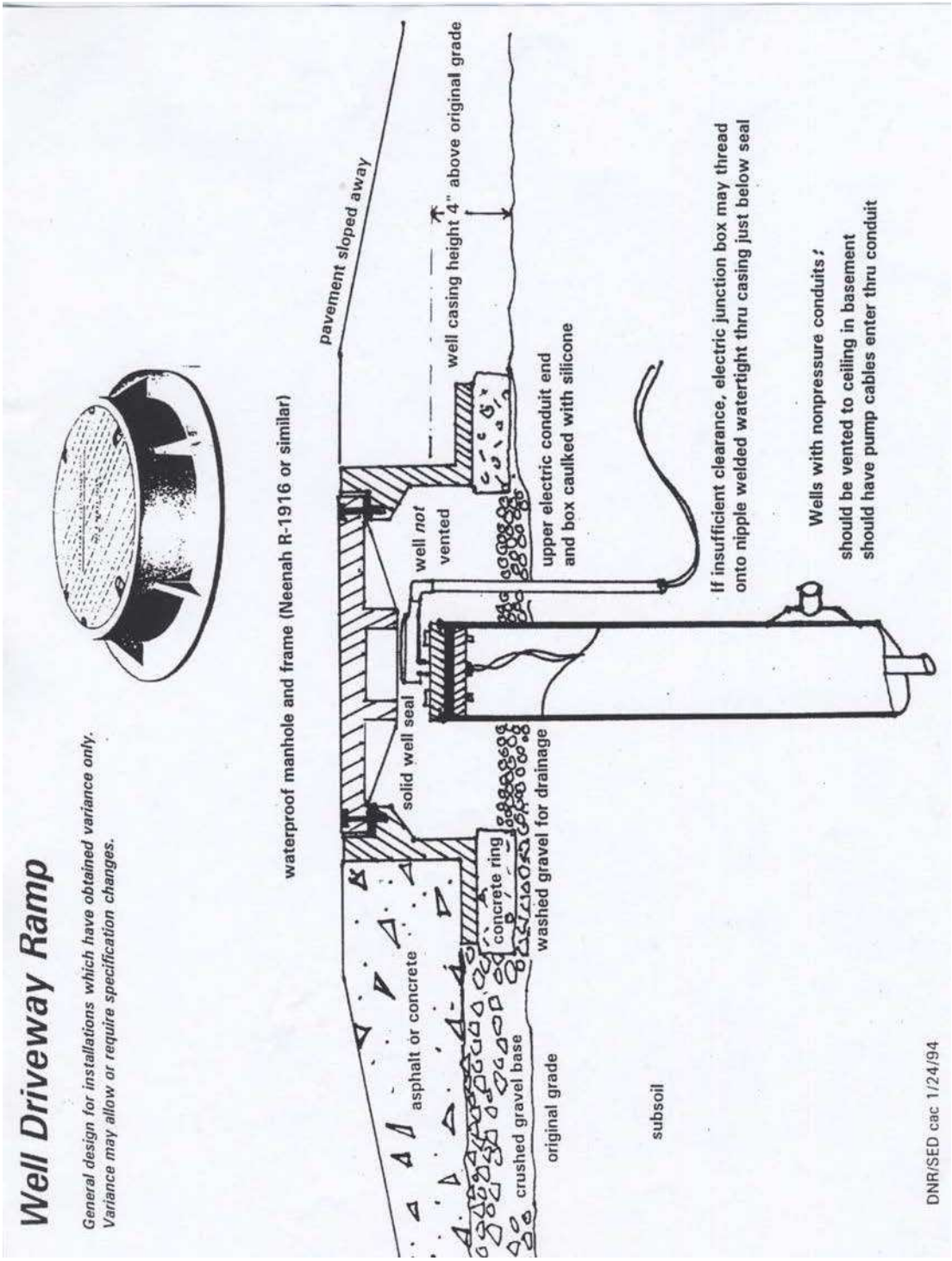

Figure 45A: Well Driveway Ramp

Removed by Register March 2015 No. 711. For current adm. code see: http://docs.legis.wisconsin.gov/code/admin_code.

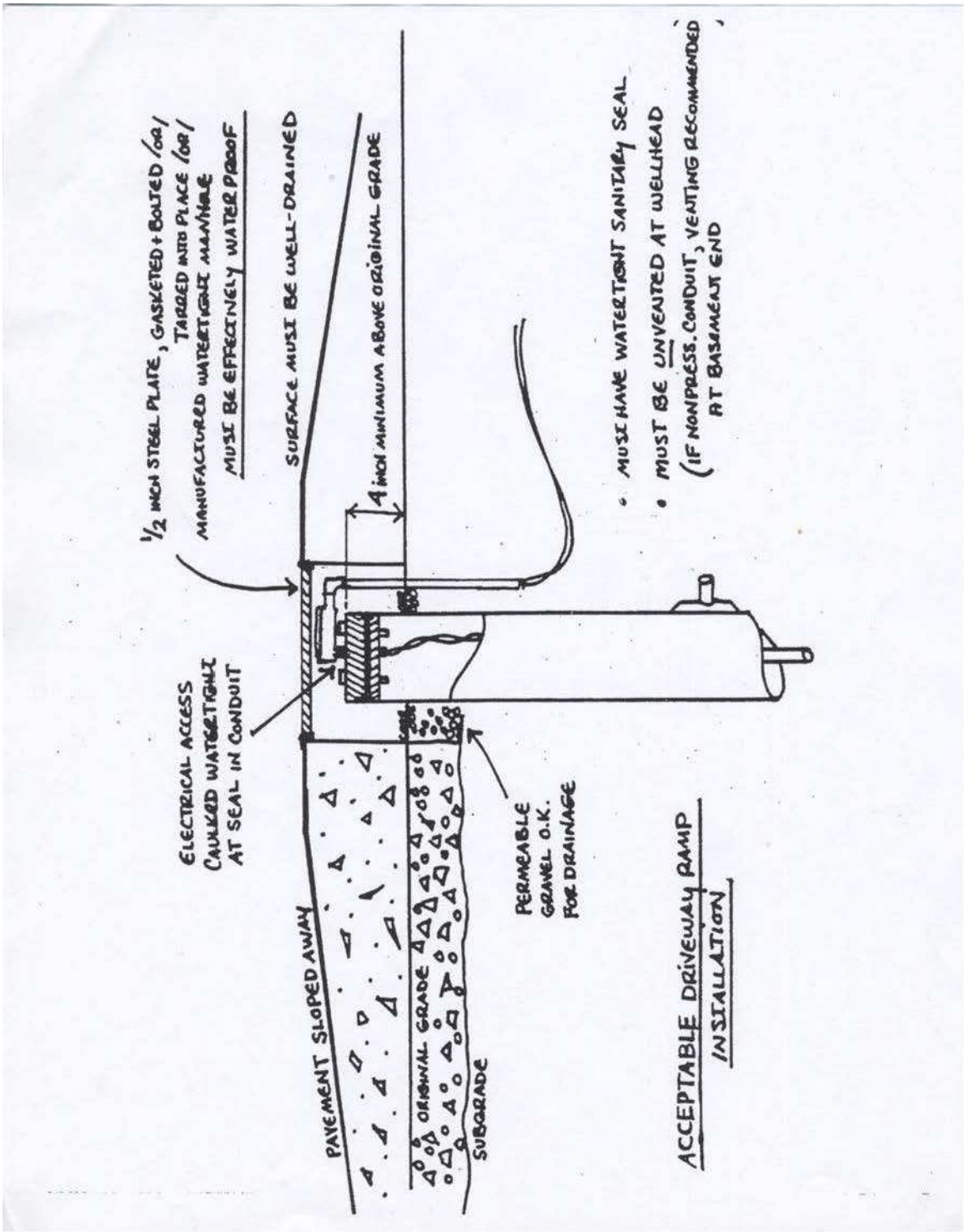

Figure 45B. Acceptable Driveway Ramp Installation

History: Cr. Register, January, 1991, No. 421, eff. 2−1−91; am. (1), Register, September, 1994, No. 465, eff. 10−1−94; correction in (2) (d) 1. made under s. 13.93 (2m) (b) 7., Stats., Register, May, 2000, No. 533; correction in (2) (d) 1. made under s. 13.92 (4) (b) 7., Stats., Register December 2011 No. 672; **CR 13−099: cr. (3), Figures 45A, 45B Register September 2014 No. 705, eff. 10−1−14.**

Removed by Register March 2015 No. 711. For current adm. code see: http://docs.legis.wisconsin.gov/code/admin_code.

NR 812.37 Water treatment. (1) SCOPE. This section applies to treatment of water for potable use in a private or noncommunity water system except for the disinfection treatment, batch chlorination, and acidification prescribed in ss. NR 812.22 and 812.41.

(2) GENERAL STANDARDS. (a) Water treatment devices installed in a water system shall have a plumbing product approval in accordance with chs. SPS 382 and 384.

(b) A water supply to be treated for health related contaminants or requiring approval under sub. (3) shall produce bacteriologically safe water prior to treatment, unless the department determines that a bacteriologically safe water supply is not available. The water system owner or operator shall assure that the water supply remains bacteriologically safe after installation of a water treatment device. Health related contaminants are those contaminants for which: primary drinking water standards are established in ch. NR 809, public health groundwater quality standards are established in ch. NR 140, and health advisories are established on a contaminant specific basis by the department.

Note: The department recommends that a bacteriologically safe water supply be used when any water treatment device is installed for removal of any contaminant for any purpose.

(c) Water treatment devices shall be installed in accordance with the manufacturer's printed instructions, chs. SPS 382 and 384, and, if specified, department written installation approval conditions. If there is a conflict between the manufacturer's instructions and the code requirements or approval conditions, the code requirements and approval conditions shall take precedence.

(d) Water treatment devices shall be installed by a:

1. DSPS licensed plumber if installed following the pressure tank;

2. Licensed pump installer if installed before the pressure tank; or

3. Property owner in a one family building owned and occupied by the owner as their home or farm building, except where a DSPS licensed plumber is required by local ordinance.

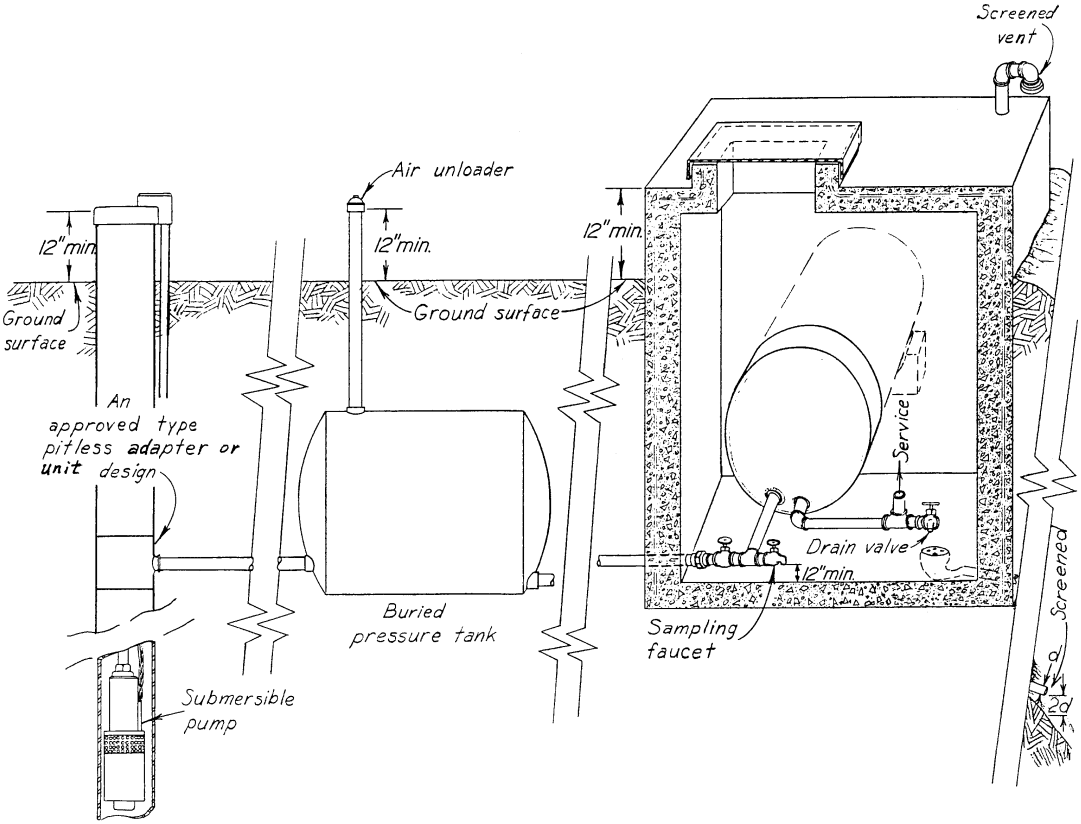

Figure 44. Pump installation for a well with a submersible pump and a buried pressure tank less than 1,000 gallons, middle drawing, or greater than 1,000 gallons, at right.

(e) Treatment for control of bacteriologically unsafe water in a private or noncommunity water system or for control of contaminant levels in excess of primary drinking water standards or health advisories in a noncommunity water system shall be considered only after constructing a new well or reconstructing an existing well in accordance with criteria specified by the department staff or after the department determines that an alternative safe water system is not available.

(f) The installation of a water treatment device shall supplement and not replace proper well location, construction and water supply protection.

(g) Unless otherwise stated in the department's installation approval, treatment devices requiring approval under sub. (3) shall be designed and installed to assure control of all water provided by the water system. The department's installation approval may exclude treatment of water being supplied for certain uses including, but not limited to, outside hose bibbs, fire protection systems, boilers used for space heating, turf sprinkler systems and non−food process water.

(h) Discharge or disposal of contaminated wastewater, filter media, or gases shall comply with applicable State and Federal regulations.

(i) All chemicals used for addition to a water system shall be certified by NSF according to NSF Standard No. 60 or shall be approved by the department.

Note: The listed NSF standard is available for inspection at the department of natural resources, the secretary of state and the legislative reference bureau, and may be obtained for personal use from the National Sanitation Foundation Testing Laboratories, Inc.; P.O. Box 1468, Ann Arbor, MI 48106.

Removed by Register March 2015 No. 711. For current adm. code see: http://docs.legis.wisconsin.gov/code/admin_code.

(3) INSTALLATION APPROVAL REQUIRED. Department installation approval shall be obtained prior to installation if any of the following conditions apply:

(a) The water treatment device is intended to control bacteriologically unsafe water.

(b) The water treatment device is to be installed on or within the well or when water treatment occurs within the well.

(c) The water treatment device is intended to control contaminant levels in excess of primary drinking water standards in a private water system and the contaminant levels exceed the influent concentrations specified in the DSPS plumbing product approval letter.

(d) The water treatment device or treatment system is intended to control corrosion or to control, or remove or prevent contaminant levels in excess of primary drinking water standards, health advisories or action levels in a noncommunity water system.

(e) The department informs the water system owner or operator that the water system contamination is complex and department installation approval of a water treatment device is required. Complex contamination of a water system may include, but is not limited to the following:

1. Multiple contaminants;
2. Contaminants in excess of health advisory levels; or
3. Contaminants in excess of public health groundwater quality standards.

(f) The department has ordered the discontinued use of a water system.

(g) Fluoride treatment of a water system.

(h) The installation of a water treatment plant facility.

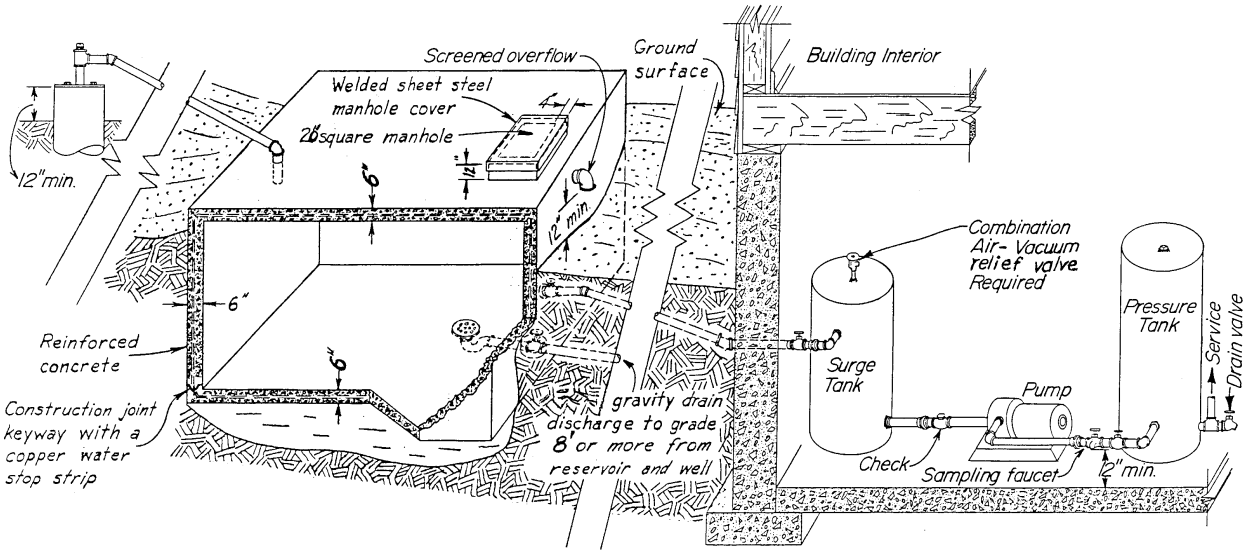

Figure 44a. Reservoir specifications.

Removed by Register March 2015 No. 711. For current adm. code see: http://docs.legis.wisconsin.gov/code/admin_code.

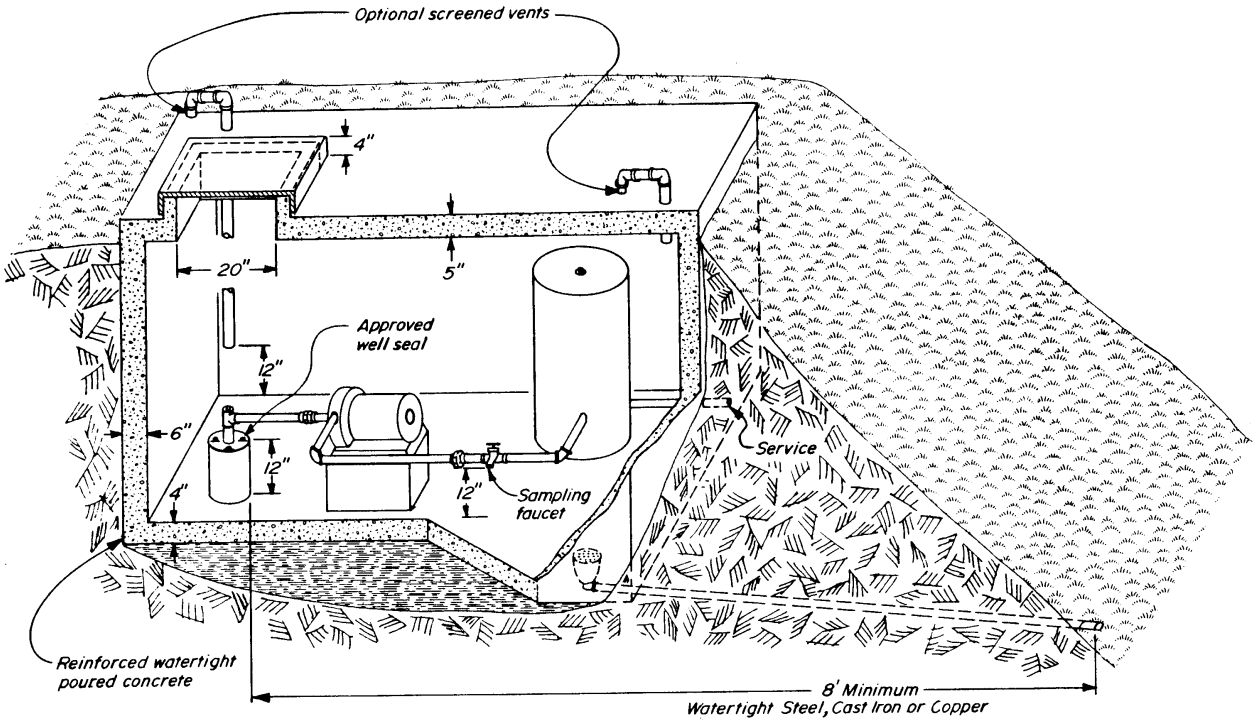

Figure 45. Minimum requirements for approved new well pits.

(4) APPLICATION AND APPROVAL CONDITIONS. (a) In addition to the information required in s. NR 812.09 (2), the department may require the applicant to describe the proposed water treatment device; provide a sketch of the proposed installation; include information on results of an analysis of coliform bacteria of a water sample taken from the water supply within 6 weeks of application and analysis of contaminants intended to be controlled by the water treatment device; and describe the proposed water quality monitoring, operating, and maintenance programs. Additional sampling and information may be requested depending on the nature of the contamination and other site specific conditions. Analysis of water samples for bacteria shall be performed by a laboratory certified by DATCP under ch. ATCP 77 or the Wisconsin state laboratory of hygiene.

(b) The department may require operational procedures including periodic sampling and analysis, device maintenance, and inspection provisions in its installation approval of a water treatment device.

(c) The department may require the owner to file a statement on the property deed regarding the need for a water treatment device.

(d) The department may require the water system owner or operator to shut off, by pass or disconnect a water treatment device installed upstream of the first sampling faucet after the well for a period of up to two weeks in order to obtain a sample of untreated water for purposes of analysis for coliform bacteria or other contaminants.

(e) At a minimum, fluoride treatment installations or corrosion control treatment system installations shall comply with the following standards:

1. The fluoride or the corrosion control chemical is added with a positive displacement−type feed pump;

2. A spring loaded check valve is installed between the positive displacement−type feed pump and the point of injection to prevent backflow of untreated water into the solution tank;

3. A spring loaded check valve is installed to prevent the siphoning of fluoride or corrosion control chemical into the water;

4. The feed pump and the well pump are electrically wired in interlock with a flow switch connected in series from the feed pump into the well pump and there are no water outlets upstream of the point of fluoride or corrosion control chemical injection;

5. The feed pump has a metering device for measuring fluoride or corrosion control chemical flow rates; and

6. The chemical storage tank is covered and installed at an elevation lower than the feed pump.

Note: Primary drinking water standards are contained in ch. NR 809.

Note: All owners or operators of water systems containing contaminants should consider the merits and availability of a naturally safe water system prior to considering the alternative of long−term water treatment device installation and use. If water treatment has been selected, then point−of−entry water treatment devices should be considered for those contaminants that may have dermal or inhalation exposure routes.

History: Cr. Register, January, 1991, No. 421, eff. 2−1−91; am. (3) (d), (4) (e) (intro.), 1., 3. to 6., cr. (2) (i), (3) (h), Register, September, 1994, No. 465, eff. 10−1−94; corrections in (2) (a) and (c) made under s. 13.93 (2m) (b) 7., Stats., Register, May, 2000, No. 533; correction in (2) (a), (c), (d) 1., 3. made under s. 13.92 (4) (b) 6., 7., Stats., Register December 2011 No. 672; **CR 13−099: am. (4) (a) Register September 2014 No. 705, eff. 10−1−14.**

NR 812.38 Injection of fertilizers or pesticides for agricultural purposes. (1) POTABLE WATER SUPPLIES OR SYSTEMS. Chemical addition to a potable well or water system may only be undertaken according to the requirements of s. NR 812.37. The injection of fertilizers or pesticides into a potable well or water system is prohibited. Fertilizers or pesticides may be used with potable water systems by repumping from a tank or a pond. The discharge from the well pump into a reservoir or pond shall have a free fall from a point at least 2 feet above the established reservoir or pond overflow elevation.

(2) NONPOTABLE WATER SUPPLIES. (a) *Injection of fertilizers.* 1. Injection of fertilizers into a nonpotable well, well pump suction pipe or pump column is prohibited.

2. Fertilizer may be injected in the discharge pipe of a booster pump delivering water from a tank or sealed pond into which the well pump discharges through an air gap from a point at least 2 discharge pipe diameters above the overflow level of the tank or pond.

Removed by Register March 2015 No. 711. For current adm. code see: http://docs.legis.wisconsin.gov/code/admin_code.

3. Fertilizer may be injected into the well pump discharge pipe of a nonpotable water system if it is injected with a positive displacement type chemical feed pump or other approved equipment at a point downstream of a reduced pressure principle backflow preventer which complies with ch. SPS 384 and is installed in accordance with ch. SPS 382 or downstream of an UL approved check valve installed in the well pump discharge pipe at the well site. The chemical feed pump shall be shut off at least 10 minutes prior to shutting off of the well pump so as to purge the chemical from the water system.

4. Fertilizer may be introduced into the well pump discharge pipe of a nonpotable water system if it is aspirated into the well pump discharge pipe with a venturi−type aspirator and the injection point is downstream of a barometric pipe loop extending at least 35 feet above the highest part of the downstream discharge piping.

(b) *Injection of pesticides.* 1. The injection of pesticides into a nonpotable well, well pump suction pipe or pump column is prohibited.

2. Pesticide may be injected in the discharge pipe of a booster pump delivering water from a tank or pond into which the well pump discharges through an air gap from a point at least 2 discharge pipe diameters above the overflow level of the tank or pond.

3. Pesticide may be injected into the well pump discharge pipe of a nonpotable water system if it is injected with a positive displacement type chemical feed pump or other approved equipment at a point downstream of a reduced pressure principle backflow preventer, which complies with ch. SPS 384 and is installed in the well pump discharge pipe at the well site but subject to the following conditions:

a. The department shall be notified by the owner of the nonpotable water system of when and where a reduced pressure principle backflow preventer is installed in a system and when it is removed,

b. The reduced pressure principle backflow preventer shall be installed and maintained in accordance with ch. SPS 382,

c. The reduced pressure principle backflow preventer shall be installed above the regional flood level and the location shall be accessible for testing, inspection and maintenance,

d. The reduced pressure principle backflow preventer may not be bypassed or made inoperative nor removed from an irrigation system in which pesticides continue to be injected into the well pump discharge pipe,

e. Annual testing of the reduced pressure principle backflow preventer shall be conducted with a differential pressure gauge in accordance with the ASSE Standard 1013 testing method for reduced pressure principle backflow preventers by a DSPS listed backflow prevention device tester, and the owner of the system shall send a report of the test results to DSPS at least once each year, and

f. Pesticide application and use in compliance with this section shall conform to ch. ATCP 29.

Note: Lists of DSPS approved reduced principle backflow preventers are available from DSPS. Listing as a tester of reduced pressure principle backflow preventers may be obtained following successful completion of a training course accepted by DSPS. Lists of testers willing to perform the required testing are available from DSPS.

4. Pesticide may be introduced into the well pump discharge pipe of a nonpotable water system if it is aspirated into the well pump discharge pipe with a venturi−type aspirator and the injection point is downstream of a barometric pipe loop extending at least 35 feet above the highest part of the downstream discharge piping.

History: Cr. Register, January, 1991, No. 421, eff. 2−1−91; correction in (2) (b) 3. f. made under s. 13.93 (2m) (b) 7., Stats., Register, September, 1994, No. 465; corrections made under s. 13.93 (2m) (b) 7., Stats., Register, September, 1996, No. 489; correction in (2) (b) 3. made under s. 13.93 (2m) (b) 7., Stats, Register, May, 2000, No. 533; correction in (2) (a) 3., (b) 3. (intro.), b., e. made under s. 13.92 (4) (b) 6., 7., Stats., Register December 2011 No. 672.

NR 812.39 High capacity well water level and water usage measurement. (1) WELL WATER LEVEL MEASUREMENT. The department may require the installation and calibration of means for the measurement of static and pumping well water levels for any high capacity well and may require the operator of the well to submit monthly reports of this information. Installation shall be made in a manner as to prevent entrance of contaminants to the water system and in compliance with approval conditions and as depicted in figure 39.

(a) When an air line with altitude gauge is installed in a well, the equipment and installation shall meet the following requirements:

1. When the top of the well is not housed in a pumphouse or other structure, that portion of the air line extending above the pump discharge head or well seal, and to a depth of at least 3 feet into the well, shall be metal or shall be fiber or wire−braided reinforced tubing. An "air quick−disconnect" fitting shall be installed for the top of the air line such that the altitude or pressure gauge may be easily removed and stored in a dry place when water levels are not being measured. The "air quick−disconnect" fitting shall be installed to point downward or shall be capped such that contaminants cannot enter the air line.

2. A silicone rubber sealant or a watertight threaded metal fitting shall be used to seal the opening in the pump discharge head or the well seal through which the air line extends.

(b) When an electrical water level sensing device, a steel tape or similar means for use in measuring water levels is used in lieu of an air line with altitude gauge, the opening in the pump discharge head or well seal used for the measurements shall be sealed watertight when water levels are not being measured.

(2) RECORDING TOTAL WATER USAGE. The department may require the installation and calibration of means for the recording of total water usage from a high capacity well and may require the operator to the well to submit monthly reports of this information.

History: Cr. Register, January, 1991, No. 421, eff. 2−1−91.

NR 812.40 Above ground pumphouses. When a structure is constructed to house a well, pump, pressure tank, other appurtenances or any combination thereof, the structure shall be weather− and frost−proof, if needed. Above ground pumphouses shall be constructed with the following minimum features:

(1) When a poured−concrete floor is provided, the top of the floor shall be at least 4 inches above the established ground grade and sloped toward the drain or door, or away from the well. A watertight bond shall be provided between the well casing pipe and the concrete;

(2) A door opening outward when the structure is large enough, or a trapped floor drain discharging to the ground surface at least 8 feet from the well when a door is not installed;

(3) Protection from freezing for the well, pressure tank and piping, if needed;

(4) Hinged roof or removable hatch over the well or some provision for pulling the pump; and

(5) The structure may not be used for storage materials that could contaminate the well.

Note: Dimensions, insulated walls and roof and actual details of wall and roof design are optional. See figure 46.

History: Cr. Register, January, 1991, No. 421, eff. 2−1−91; am. (intro.), Register, September, 1994, No. 465, eff. 10−1−94.

NR 812.41 Disinfection, flushing and sampling. (1) DISINFECTION. When a potable well is entered for the purpose of installing, replacing or repairing equipment located within the well, the well and discharge piping shall be thoroughly disinfected by the pump installer or by the person who installed the pump using sodium hypochlorite or calcium hypochlorite. Chlorine compounds having additives may not be used.

(a) The disinfectant shall be dispersed throughout the entire water column and in the water system.

Removed by Register March 2015 No. 711. For current adm. code see: http://docs.legis.wisconsin.gov/code/admin_code.

(b) A chlorine solution with a minimum of 100 mg/l of chlorine shall be used to disinfect wells and water systems.

(c) The disinfectant solution shall be prepared according to s. NR 812.22 (4) and shall remain in the system at least 8 hours, except for emergency situations when water is needed without delay. A contact time of at least 30 minutes shall be provided for emergency situations.

(2) FLUSHING. The pump installer or his or her agent shall thoroughly flush the system of chlorine after disinfecting and before the pump is placed in normal service.

(3) SAMPLING FOR COLIFORM BACTERIA, NITRATE, AND ARSENIC. (a) For potable wells, the pump installer or his or her agent or the owner shall collect a water sample to be analyzed for coliform bacteria no later than 30 days following completion of the original pump installation and before the system is placed into service. Water samples shall also be collected and analyzed for coliform bacteria, nitrate and arsenic no later than 30 days after the well is entered for the purpose of measuring or diagnosing any feature or problem within the well or after the well is entered for rehabilitation, redevelopment, reconditioning, or cleaning or if the well is entered for the purpose of installing, replacing, or repairing equipment located within the well or when the casing height is raised. If the pump installer uses the well owner as the agent to collect the water samples, the pump installer shall provide the owner with laboratory designated sample bottles and department specified forms. Regardless of whom the pump installer designates to collect and submit the samples for analysis, the responsibility to ensure these tasks are completed belongs to the pump installer. Water samples shall be collected no later than 30 days after completion of the work. If the installation is completed at a time when the sample will be received at a certified laboratory later than 48 hours after the sample was collected, the sample may instead be collected no later than 30 days after the well is placed in service. If the laboratory test report indicates that any test result is invalid for any reason, including improper sample bottle, improper collection technique, or longer than 48 hours between sample collection and arrival at the laboratory, the pump installer is required to collect replacement samples no later than 30 days of receiving the invalid test report(s).

(b) Water samples for coliform bacteria analysis shall be analyzed by a laboratory certified by DATCP under ch. ATCP 77 to perform coliform bacteriological examination of drinking water provided the laboratory has an agreement with the department for electronic submission of laboratory test reports to the department no later than 30 days after completion of each analysis or be analyzed by the Wisconsin state laboratory of hygiene.

(c) Water samples for nitrate analysis shall be analyzed by a laboratory certified by the department under ch. NR 149, to perform nitrate analysis of drinking water provided the laboratory has an agreement with the department for electronic submission of laboratory test reports to the department no later than 30 days after completion of each analysis, or be analyzed by the Wisconsin state laboratory of hygiene.

(d) Water samples for arsenic analysis shall be analyzed by a laboratory certified by the department under ch. NR 149, to perform arsenic analysis of drinking water provided the laboratory has an agreement with the department for electronic submission of laboratory test reports to the department no later than 30 days after completion of each analysis, or be analyzed by the Wisconsin state laboratory of hygiene.

Note: In some instances arsenic test results may be temporarily high due to turbidity increases caused by changing a pump or by chlorination following work involving entry into the well. Before pursuing remedial reaction, the well owner is advised to collect a second water sample at least 30 days after the first sample.

(e) The certified laboratory and pump installer shall use forms specified by the department. The pump installer shall provide the well owner with a copy of the laboratory test reports no later than 10 days after the pump installer's receipt of the reports.

(4) WELL CASING PIPE DEPTH VERIFICATION. When required to measure well casing pipe depth, due to lack of a confirmable well construction report, the pump installer shall enter the well details, including location, well casing pipe depth, total well depth, distances to possible contaminant sources and well owner information on a form specified by the department and shall submit the report to the department no later than 30 days after performing the verification. A copy of the report shall also be provided to the well owner no later than 30 days after performing of the verification.

History: Cr. Register, January, 1991, No. 421, eff. 2–1–91; am. (1) (intro.), (3) (a), (c), Register, September, 1994, No. 465, eff. 10–1–94; **CR 13–099: r. and recr. (3), cr. (4) Register September 2014 No. 705, eff. 10–1–14.**

Subchapter IV — Standards for Existing Installations

NR 812.42 Criteria for evaluation. (1) LOCATION, WELL CONSTRUCTION, PUMP INSTALLATION, WATER QUALITY, AND SANITARY CONDITION. Each existing water system shall be viewed as an individual unit and its acceptability for use as a source of water shall be determined on the basis of its location, construction, pump installation, pump discharge piping arrangement, water quality, and sanitary condition. Existing installations shall be evaluated according to and shall comply with the requirements in effect at the time they were constructed or installed, or if constructed or installed prior to April 10, 1953, with the standards adopted on that date, except that installations shall meet the further well location, well construction, pump and pump discharge, water quality, pit, reservoir and dug well requirements of this section. The owner shall provide written documentation verifying the date of construction or installation or both. Water systems constructed or installed on or after February 1, 1991 shall meet the requirements of Subchapters I through III. Water systems constructed or installed prior to February 1, 1991 shall meet the requirements of this subchapter. Water systems having features not meeting the requirements of this section or the code in effect at the time of construction or installation if installed after April 10, 1953, shall be upgraded as specified in sub. (11) and s. NR 812.04 (2) according to requirements for new construction or installation, or shall be filled and sealed according to the criteria and requirements of s. NR 812.26. The department may deny approval for operation of an existing well requiring approval under s. NR 812.09 (4), if the well does not meet the construction requirements of this chapter for new wells:

(a) *Location.* The well location shall conform to the requirements in effect at the time the well was constructed, or to the location requirements of s. NR 812.08. However, if a contamination source was installed after the well was constructed, the well location shall conform to the requirements in effect at the time of installation of the contamination source. If the well was constructed prior to April 10, 1953, it shall meet the separation distance requirements established on April 10, 1953, except those separation distance requirements that are no longer in effect. If a separation distance requirement is less in the current code than it was in the April 10, 1953 code, the lesser separation distance requirement applies. A well which meets the location requirements in effect at the time of construction, but does not meet the current location requirements of s. NR 812.08 may only be reconstructed with prior department approval.

(b) *Well construction.* 1. The well construction shall be in compliance with the construction requirements in effect at the time the well was constructed or shall be in compliance with the standards of ss. NR 812.09 to 812.15, except if the well was constructed prior to April 10, 1953, in which case the well construction shall be in compliance with the standards adopted on April 10, 1953. A well constructed in violation of the requirements in effect at the time of construction, or a well constructed to meet the requirements in effect at the time of construction but not according to the construction requirements of ss. NR 812.09 to 812.15, may only be reconstructed with prior department approval.

Removed by Register March 2015 No. 711. For current adm. code see: http://docs.legis.wisconsin.gov/code/admin_code.

2. The well casing pipe shall meet the minimum wall thickness requirements of s. NR 812.17 Table V for its diameter and may not be in a deteriorated condition.

3. If the minimum well construction requirements of this paragraph are not met, the well shall be filled and sealed in accordance with s. NR 812.26. For wells in basements or walkout basements, the well casing pipe depth shall be measured from the floor of the basement.

4. Except for where additional well casing pipe depth has been required for a variance or a special well casing depth area, unconsolidated formation wells, including both drilled and driven−point wells, shall have minimum well casing pipe depth settings of at least 25 feet below the ground surface, not including the screen; or, if the static water level is deeper than 15 feet, shall have minimum well casing pipe depth setting at least 10 feet below the static water level.

5. Except for where additional well casing pipe depth has been required for a variance or a special well casing depth area, bedrock wells shall have minimum well casing pipe depth settings below the ground surface as follows:

a. Twenty−five feet for wells terminating in sandstone, constructed before February 1, 1991; and 30 feet for wells terminating in sandstone, constructed on or after February 1, 1991.

b. Forty feet for wells terminating in limestone or dolomite.

c. Forty feet for wells terminating in bedrock other than sandstone, limestone or dolomite.

d. Sixty feet for wells terminating in limestone or dolomite, when the depth to bedrock is less than ten feet below the ground surface and the well was constructed on or after February 1, 1991.

(c) *Water quality.* A well should produce bacteriologically safe water and produce water free from contaminant levels in exceedence of the drinking water standards of s. NR 812.06. If a well does not produce bacteriologically safe water or produces water containing contaminant levels in exceedence of the drinking water standards of s. NR 812.06 the department may require the water system to be upgraded to meet the requirements of this chapter or may require the well to be filled and sealed according to the criteria and requirements of s. NR 812.26.

(2) PITS AND SUBSURFACE PUMPROOMS (ALCOVES). Existing pits used only for the housing of valves are exempt from the requirements of this section except that a pit used for this purpose shall be watertight, may not be connected to a sewer, shall be drained to permeable soil or to the ground surface, and may not be subject to flooding. Existing well or pressure tank pits, alcoves and subsurface pumprooms constructed after April 10, 1953 shall comply with the minimum requirements of s. NR 812.36 (2). When a well in a free−standing pit is filled and sealed, the pit shall be filled in accordance with s. NR 812.26 (7) (a) 5.unless the pit is a complying valve pit. When a well in a free−standing pit is extended above grade, the pit shall be filled in accordance with s. NR 812.26 (7) (a) 5.unless the pit is a complying valve pit. Pits and alcoves constructed on or before April 10, 1953 shall meet the following minimum requirements:

(a) *Construction.* The entire pit or subsurface pumproom structure, including the roof, shall be constructed of reinforced watertight poured concrete. If the pit or a subsurface pumproom pit connected to a basement (alcove) has a history of being continuously dry, walls of concrete block, brick, or stone with mortared joints may be accepted. The walls, floor and roof shall be crack−free and watertight. The junction of walls and floors and all openings in the structure shall be sealed watertight. The roof or deck shall be at or above the ground surface. Requirements for existing pits are depicted in figures 47 and 48.

(b) *Access.* The pit shall be provided with a manhole opening, having a raised curbing edge at least 4 inches higher than the pit roof. A structurally substantial, waterproof, overlapping, tight−fitting cover with skirted sides shall be provided for the manhole. A watertight, cast−iron manhole frame and cover bolted in place with a gasket may be substituted for a curbed manhole. A subsurface pumproom pit adjoining a basement or a pit not having the manhole centered over the well may have a section of well casing pipe installed directly above the well. This pipe shall be equal in size or larger than the well casing pipe and it shall be sealed with an approved well seal or cap.

(c) *Drainage.* The department recommends that a pit be drained by a separate, metal, gravity drain discharging to the ground surface or to a subsurface pocket of permeable sand or gravel. The drain pipe shall be watertight. If there is a backflow or seepage from the drain into the pit at any time, the drain shall be sealed. When a drain is not installed, the department recommends that the pit have a watertight sump. A subsurface pumproom (alcove) adjoining a basement may be drained to the basement if the basement is adequately drained. If the basement is not adequately drained, concrete shall be poured in the alcove so that the alcove floor is increased in height to one foot above the basement floor and if the well casing height no longer complies with par. (d), it shall be extended in accordance with par. (d) 1. d. Well subsurface pumproom (alcoves) adjoining basements where the basement is subject to flooding shall be discontinued for use as a well pit and the well shall be filled and sealed according to s. NR 812.26. The subsurface pumproom (alcove) need not be filled and sealed. Pit or alcove drains or sump pump discharge pipes may not be directly connected to a sewer or other plumbing system. If discharging to the ground surface, the end of the surface discharge pipe shall be screened.

Removed by Register March 2015 No. 711. For current adm. code see: http://docs.legis.wisconsin.gov/code/admin_code.

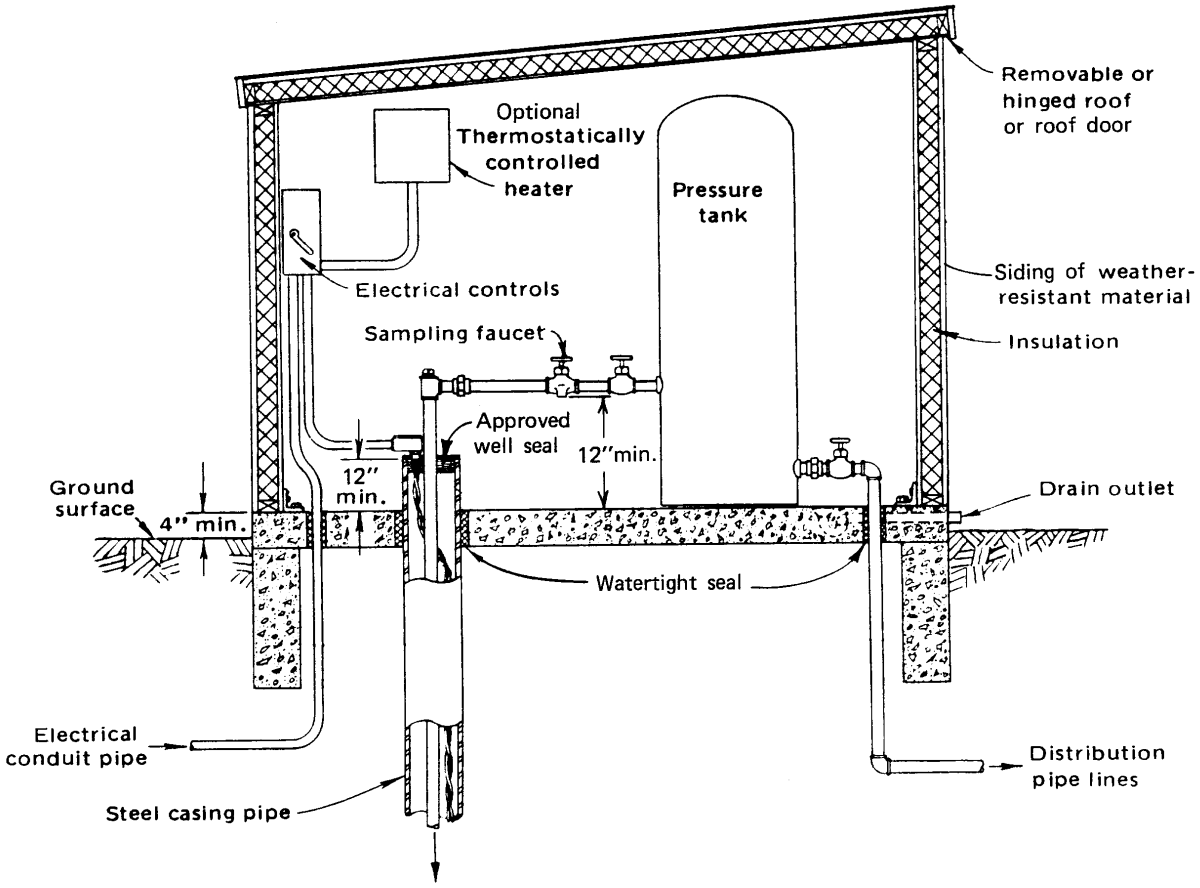

Figure 46. Pumphouse specifications.

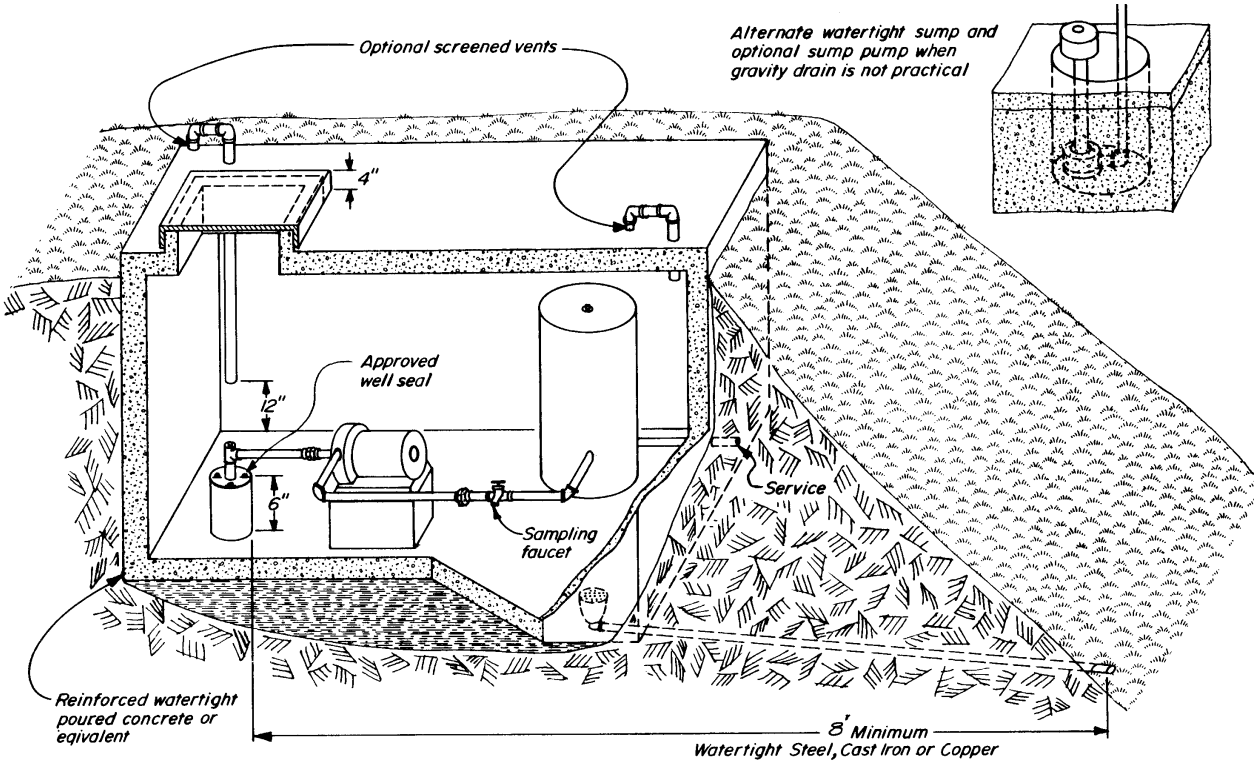

Figure 47. Minimum requirements for existing well pits.

Removed by Register March 2015 No. 711. For current adm. code see: http://docs.legis.wisconsin.gov/code/admin_code.

(d) *Well height.* The well casing pipe shall terminate at least 6 inches above the floor of a pit or a subsurface pumproom pit (alcove) connected to a basement and shall be provided with an approved sanitary well seal.

1. If the well casing pipe does not extend at least 6 inches above the floor, the pit or alcove may remain in service only if all of the following apply:

a. The well location meets the minimum standards of sub. (1) (a).

b. The well construction meets the minimum standards of sub. (1) (b), verified by measuring the well casing pipe depth in accordance with sub. (7) (c) 3., if no confirmable well construction report can be found for the well. Well details, including location, well casing pipe depth, total well depth, distances to possible contaminant sources and well owner information shall be entered on a form and submitted to the department in accordance with s. NR 812.22 (10) or 812.41 (4).

c. The pit or alcove structure meets the requirements of this section.

d. The well casing pipe is extended up and out of the pit or alcove to 12 inches above the outside grade in accordance with sub. (12). For situations where the well would create an obstruction, including in a stoop, sidewalk, breezeway, driveway, garage or patio, making it impractical to raise the well casing pipe up and out of the alcove, the well casing pipe may be raised to a height just below the ceiling of the alcove structure in accordance with sub. (12).

2. If the pit is a subsurface pumproom (alcove) connected to a basement and the alcove floor is lower than the basement floor, the floor shall be raised to a height at least even with the basement floor by pouring concrete.

3. If the newly–poured alcove floor results in the well casing pipe terminating less than 6 inches above the floor, then the well casing pipe shall be extended as specified in sub. (2) (d) 1. d and in accordance with sub. (12). If the well casing pipe is extended or the floor is raised, a four–inch high, two–inch thick concrete collar shall be placed around the well casing pipe just above where it extends out of the floor.

(e) *Pit venting.* Well pit vent pipes, if used, shall be located in opposite corners. One pipe shall extend to within one foot of the pit floor and the other extend only down through the pit roof. The upper end of each vent pipe shall extend watertight through the pit roof and terminate with a reverse bend and screened outlet.

Note: Approval has been required to construct a pit since April 10, 1953.

(3) NONCOMPLYING PITS. (a) *Noncomplying freestanding pit structures.* When the free–standing pit structure does not meet the minimum construction requirements of sub. (2) or when water gains access to a pit through the floor or walls, the floor and at least one wall of the pit shall be perforated and the pit shall be filled after properly extending the well casing pipe above grade in accordance with sub. (12) or after properly filling and sealing the existing well according to s. NR 812.26. Before the pit is filled, all water system features, including but not limited to, the pressure tank, pump, discharge piping, electrical wiring and conduit, and any treatment equipment shall be removed from the pit.

(b) *Noncomplying subsurface pumprooms (Alcoves).* If the pit is a subsurface pumproom (alcove) connected to a basement, the pit need not be filled, except when the alcove floor is lower than the basement floor, in which case the floor shall be raised to a height at least even with the basement floor by pouring concrete. To allow for easy removal of the pump for servicing or replacement, this casing extension may be made with the use of a threaded and coupled joint. If the well casing pipe is extended or the floor of the alcove is raised, a four–inch high, two–inch thick concrete collar shall be placed around the well casing pipe just above where it extends out of the floor.

(c) *Other modifications to pit or alcove.* Any other modifications to the pit or alcove allowed by the department shall be made in a manner to meet the requirements for pits in s. NR 812.36.

(4) RESERVOIRS. (a) An existing reservoir shall be constructed of steel or reinforced concrete. If constructed with concrete, the roof shall be watertight, reinforced, poured concrete having a thickness of at least 5 inches. The walls and floor of the reservoir shall be watertight and constructed of reinforced, poured concrete or equivalent watertight construction.

(b) The manhole curbing shall extend at least 12 inches above the established ground grade. If the reservoir roof terminates above the established ground grade, the curbing shall terminate at least 6 inches above the reservoir roof. The manhole shall be provided with a waterproof, tight–fitting, overlapping metal cover with skirted sides.

(c) A reservoir overflow pipe shall be installed watertight just under the roof of the reservoir and entirely above the established ground grade. It shall terminate at a point at least 12 inches above the established ground grade with a screened, downturned elbow. If an existing overflow pipe is totally buried between the reservoir and its outlet, it shall be eliminated by properly sealing the pipe with concrete at the reservoir.

(d) A gravity discharge pipe to the reservoir shall extend entirely above established ground grade and through the roof of the reservoir or manhole curbing. Service pipe connections shall be sealed watertight. A pressurized service pipe may be connected to the reservoir below ground grade provided it is under a continuous pressure which is greater than the ground surface elevation.

(e) The reservoir shall meet the location requirements listed in Table A in effect at the time of its construction.

(f) When a below ground–grade reservoir or a buried pressure tank pit is to be abandoned, it shall be permanently filled and sealed when the well or drillhole is filled and sealed. The reservoir shall be filled according to the filling and sealing requirements of s. NR 812.26 (7) (a) 5. for well pits.

(g) The owner shall permanently eliminate, by filling and sealing, a reservoir if any of the following apply:

1. The location or construction of the reservoir does not meet the requirements of this chapter.

2. It poses a hazard to health or safety.

3. It has been taken out of service or has not been used for 2 or more years.

(h) A reservoir shall be maintained in a clean and sanitary condition and provide water free of bacterial and chemical contamination.

(5) DUG WELLS. An existing dug well may be continued in service only if it continuously produces water bacteriologically safe and containing contaminant levels below the drinking water standards of s. NR 812.06. Use of dug wells is not recommended by the department. A dug well may not be reconstructed without approval. Existing dug wells shall meet the following minimum construction requirements:

(a) *Curbing.* The curbing of every dug well shall be of watertight reinforced poured concrete or at least 3/16 inch thick steel curbing with watertight joints. Fieldstone curbing may not be used. The curbing shall extend above grade at least 8 inches and be protected from flooding. An open annular space may not exist around the dug well curbing.

Removed by Register March 2015 No. 711. For current adm. code see: http://docs.legis.wisconsin.gov/code/admin_code.

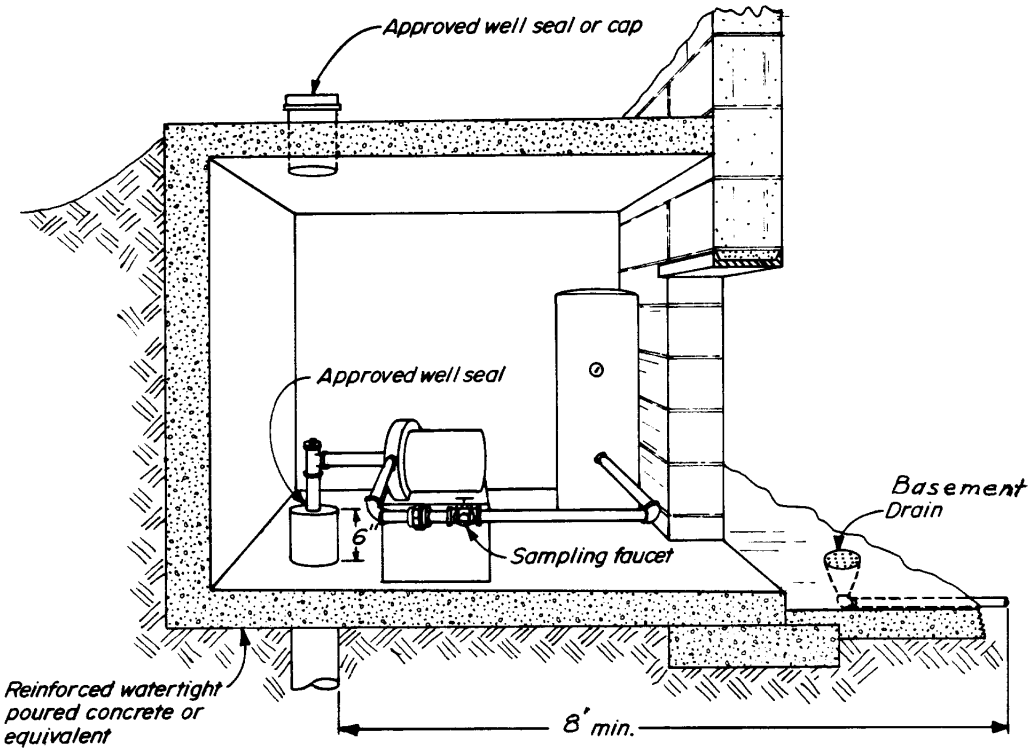

Figure 48. Requirements for an existing pit connected to a basement (subsurface pumproom).

(b) *Depth.* If the well was dug after June, 1975, the watertight curbing shall extend to a depth of at least 25 feet below ground surface and the well shall produce bacteriologically safe water. If the well was dug prior to June, 1975, the watertight curbing shall extend to at least the 15–foot depth and the well shall produce bacteriologically safe water.

(c) *Cover.* The dug well cover shall be of watertight, reinforced concrete at least 5 inches thick and wide enough to overlap the curbing by at least 2 inches. It shall provide a tight seal and be free of joints. A steel well casing pipe sleeve meeting the requirement for potable well casing pipe in s. NR 812.17 shall extend watertight through the cover to provide access for installing the pump. The steel well casing pipe sleeve shall extend at least 8 inches above the cover and have a watertight seal.

(d) *Equipment location.* Pumping equipment or attachments may not be installed for a dug well so that access to the interior of the well will be required for maintenance or repair.

(6) PUMP AND PUMP DISCHARGE INSTALLATIONS. Pump installations installed prior to February 1, 1991 shall conform to the following requirements:

(a) Installations for water supplies serving a maximum total of 3 families in residential units shall meet the following requirements:

1. The subsurface connection to the well casing pipe may be made with an approved weld–on pitless adapter or with an approved pitless unit providing the adapter or unit is installed according to the requirements of s. NR 812.31 (1), (2) (a), (3) and (4).

2. a. Any buried suction pipe shall be contained in a sealed pressurized conduit or, a nonpressurized conduit, if the nonpressure conduit was installed before February 1, 1991. The nonpressure conduit shall meet the pipe requirements of Table V between the connection to the well casing pipe and a basement, or shall be properly connected to the well with an approved pitless adapter or pitless unit designed for and used with a concentric piping arrangement. Unprotected buried suction lines not enclosed in conduit may not be used.

Note: Unprotected buried suction lines have never been allowed by the Wisconsin Well and Pump Code. Nonpressurized conduits were only allowed prior to February 1, 1991.

b. Nonpressure conduit shall have been welded watertight or threaded watertight to the well casing pipe and shall be at least 4 inches in diameter and shall enter the basement such that the bottom of the conduit is at least 6 inches above the basement floor.

Note: Nonpressure conduits to protect buried suction lines were only allowed before February 1, 1991 and then only for installations serving three or fewer homes.

c. A nonpressure conduit may extend at an angle up through a basement floor, or up through a concrete slab floor of a building having no basement, provided the lowest end of the conduit extends to a height at least 6 inches above the floor.

Note: The department recommends that the pump impeller or cylinder of pump units be located in basements not subject to flooding and be at least one foot above the floor. See figures 49 and 50 for nonpressure conduit installations.

3. Buried submersible pump discharge pipes connected to pitless adapters or pitless units shall conform to the specifications in s. NR 812.17 for steel pipe or shall conform to the requirements in the "Pipe and Tubing for water services and private water mains" table in ch. SPS 384. This pipe shall be maintained under system pressure at all times. No check valve may be placed in the pump discharge line between a pitless adapter or unit and a pressure tank or other pressure vessel. The check valve shall be located either at the top of the submersible pump, in that portion of the discharge pipe within the well or on the spool of an approved spool–type pitless unit.

(b) Installation for water supplies serving installations other than schools, high capacity well installations and those installations identified in par. (a) shall meet the following requirements:

1. The subsurface connection to the well casing pipe may be made with an approved factory–assembled pitless unit providing the unit is installed according to the requirements of s. NR 812.31 (1) and (3) or (4).

2. For off–set pump installations, any suction pipe shall be enclosed in a sealed pressurized conduit between the connection to the well casing pipe and a basement, or shall be connected to

Removed by Register March 2015 No. 711. For current adm. code see: http://docs.legis.wisconsin.gov/code/admin_code.

the well with an approved factory–assembled pitless unit designed for and having a concentric pressurized piping arrangement. Unprotected buried suction lines or suction lines enclosed in nonpressure conduits may not be used. The pipe for a pressurized conduit shall meet the requirements of Table V and shall enter the basement such that any pump suction pipe in the basement not enclosed in a pressurized conduit shall be at least 6 inches above the basement floor. The department recommends that the pump impeller or cylinder of pump units be located in basements not subject to flooding and be at least one foot above the floor. See figures 34–36 for pressurized conduit installations.

3. Buried submersible pump discharge pipes connected to pitless units shall meet the requirements of sub. (6) (a) 3.

4. When an existing offset pump installation using a nonpressure conduit has been or will be converted to a submersible pump installation, the nonpressure conduit shall be completely eliminated by cutting off the well casing pipe below the nonpressure conduit, extending the well casing pipe to at least 12 inches above grade in accordance with sub. (12) and installing pressurized discharge piping according to the requirements of ss. NR 812.28, 812.31, and 812.32 (4).

(c) Pump installations for water supplies serving schools and high capacity wells shall be provided with an above–ground discharge meeting the minimum requirements of s. NR 812.32 (1) (a), (5), (6) and (7), except when the high capacity or school approval allowed for alternate installation.

(d) *Pit pump setting.* A pump located in a conforming pit shall be installed to allow the sealing of the top of the well with an approved sanitary well seal.

(e) *Hand pumps.* Hand pumps may be continued in service if the pump base flange is bolted watertight to a well casing pipe flange and has a gasket seal; if the pump is firmly threaded to the well casing pipe for small diameter pipe; or if the structured base of the pump has recesses and is bolted to the top of the well casing pipe which is at least 2 feet above the regional flood elevation. The well casing pipe flange or the top of the well casing pipe shall terminate at the height indicated in sub. (7).

(f) *Pump connections to reservoirs.* If water is pumped to a reservoir, the piping attachment to the pump shall be made with watertight pipe fittings. The discharge pipe from the pump shall enter the reservoir in a watertight manner through that portion of the structure extending above the ground grade, unless a subsurface reservoir supply pipe is connected to the well by an approved pitless adapter and the supply pipe can be maintained under a continuous pressure head which is greater than the ground surface elevation. In such case the supply pipe shall terminate near the bottom of the reservoir. A float control switch or low and high water level electrical pump–control elements may be provided to control the pump. A check valve may be installed only in the portion of the pump discharge pipe located within the well.

(g) *Pump installations for flowing wells.* Pump installations for flowing wells shall meet the requirements of s. NR 812.32 (9).

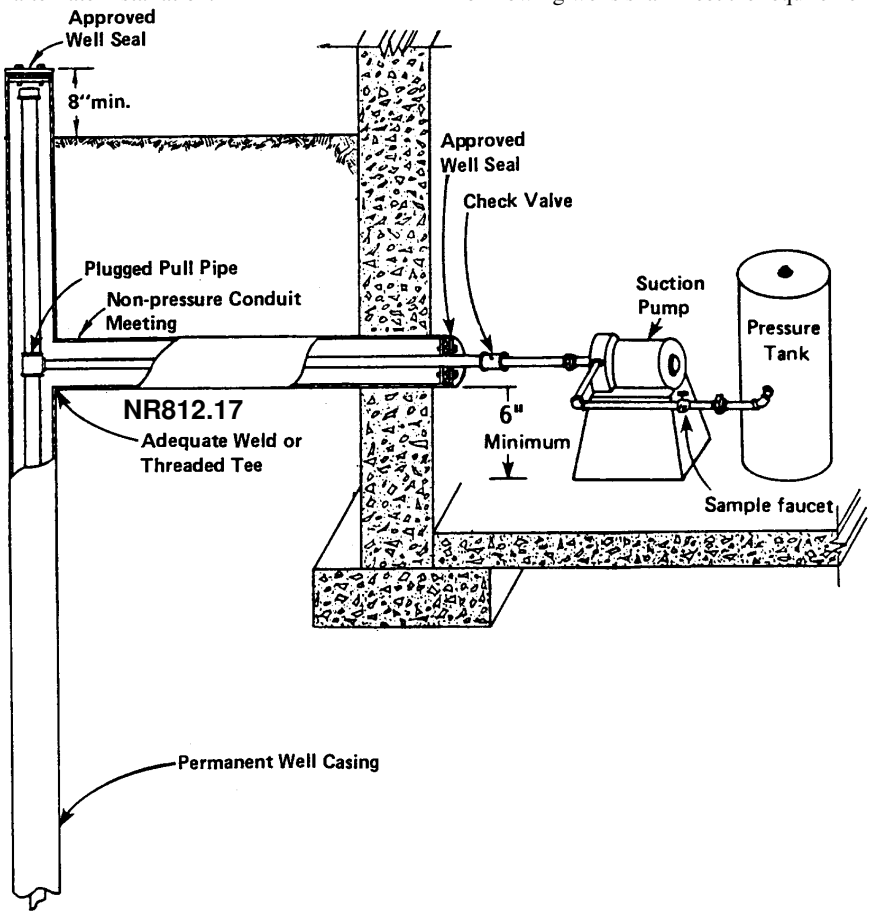

Figure 49. Minimum requirements for pump installations for existing wells with non–pressure conduit connections.

(7) HEIGHTS OF EXISTING WELLS. (a) When a well is not terminated in a basement, in a walkout basement, in a pit, in an alcove or in a subsurface pumproom, the well casing pipe shall extend above grade as follows:

1. Low capacity wells, except school and wastewater treatment plant wells, constructed before February 1, 1991 shall terminate at least 8 inches above established ground grade,

Removed by Register March 2015 No. 711. For current adm. code see: http://docs.legis.wisconsin.gov/code/admin_code.

2. High capacity, school and wastewater treatment plant wells shall terminate at least 12 inches above established ground grade, and

3. All wells constructed on or after February 1, 1991 shall terminate at least 12 inches above established ground grade.

4. All wells located in a floodplain shall extend at least 2 feet above the regional flood elevation for the well site.

(b) When the height of a well casing pipe does not meet the requirements of this section, it shall be extended in accordance with sub. (12) to a height at least 12 inches above ground grade or above the floor of a pumphouse; or, if applicable, 2 feet above the regional flood elevation. The well casing pipe may only be extended if the well meets the well casing pipe depth requirements of sub. (1) (b). If it does not meet these requirements, the well shall be filled and sealed according to the requirements of s. NR 812.26. If there is no confirmable well construction report available for the well the well casing pipe depth shall be measured. Well details, including location, well casing pipe depth, total well depth, distances to possible contaminant sources, and well owner information shall be entered on a form and submitted to the department in accordance with NR 812.22 (10) or 812.41(4).

(c) 1. When a well is terminated in a basement a below–grade crawl space, in a walkout basement, in a pit, in an alcove or in a subsurface pumproom, the well casing pipe shall extend 6 inches above the floor of the structure.

2. When the height of a well casing pipe does not meet the requirements of this section, it shall be extended in accordance with sub. (12) to a height at least 12 inches above the floor of the structure, except that for wells located in pits and alcoves the well casing pipe shall be extended at least 12 inches above the outside ground grade. For situations where the well would create an obstruction, including in a stoop, sidewalk, breezeway, driveway, garage or patio, making it impractical to raise the well casing pipe up and out of the alcove, the well casing pipe may be raised to a height just below the ceiling of the alcove structure.

3. The well casing pipe may only be extended if the well meets the well casing pipe depth requirements of sub. (1) (b). If it does not meet the requirements of sub. (1) (b), the well shall be filled and sealed according to the requirements of s. NR 812.26. The well casing pipe depth shall be measured before extending the well casing pipe, if there is no confirmable well construction report for the well. Well details, including location, well casing pipe depth, total well depth, distances to possible contaminant sources, and well owner information shall be entered on a form and submitted to the department in accordance with s. NR 812.22 (10) or 812.41 (4).

(8) EXISTING WELL SEALS AND CAPS. (a) An overlapping non vermin–proof cap or well seal shall be replaced in any of these situations:

1. The existing cap or seal, or the electrical conduit is broken or damaged,

2. The well is entered for the purpose of installing, replacing, or repairing the pump or any other equipment located within the well.

3. The well is entered for the purpose of reconstructing or rehabilitating the well.

(b) Wells constructed prior to February 1, 1991 may have been covered with overlapping caps rather than vermin–proof caps or seals, but may only continue to be covered with an overlapping cap until such time that there is entry into the well to perform water well drilling or pump installation work.

(c) Sanitary seals having solid or split–plate seals may be used, but split–plate seals may only be used if the well is enclosed in a pumphouse or a building.

(d) When a well cap or seal is replaced, it shall be replaced with an approved vermin–proof cap or an approved sanitary well seal. No open holes, other than the well vent, may exist in the cap or seal.

(e) Approved vermin–proof caps or approved sanitary well seals may be installed by licensed water well drillers or registered water well drilling businesses, or licensed pump installers or registered pump installing businesses.

Removed by Register March 2015 No. 711. For current adm. code see: http://docs.legis.wisconsin.gov/code/admin_code.

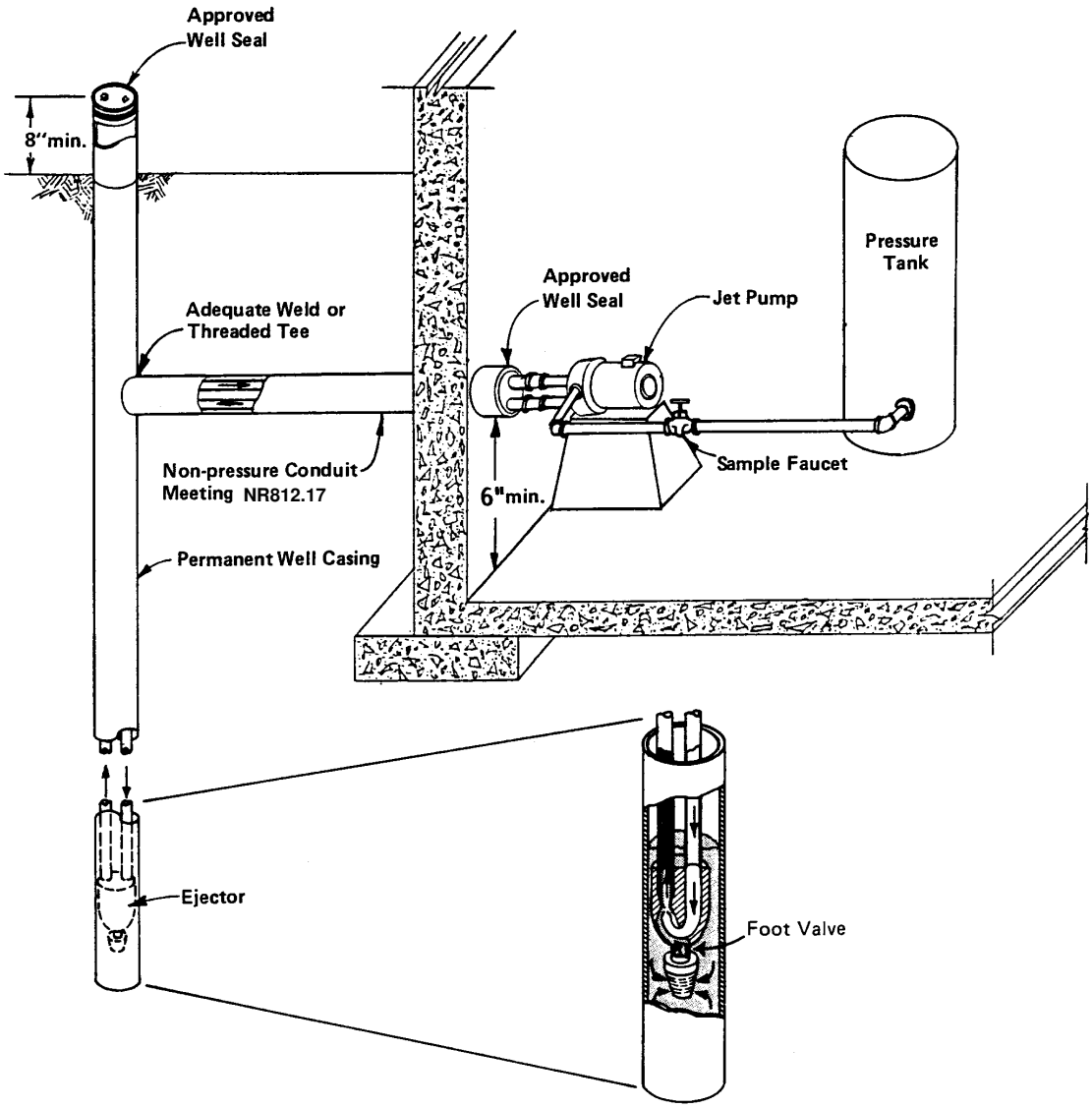

Figure 50. Pump installation for an existing well with a deep well jet pump assembly and a non–pressure conduit.

Removed by Register March 2015 No. 711. For current adm. code see: http://docs.legis.wisconsin.gov/code/admin_code.

(9) WELLS IN BASEMENTS AND WALKOUT BASEMENTS. (a) *Wells in basements and below–grade crawl spaces, not including wells in subsurface pumprooms (alcoves).* 1. Wells constructed after April 10, 1953 terminating in basements or wells constructed after July of 1951 terminating under a building addition shall be permanently filled and sealed according to the requirements of s. NR 812.26.

2. Wells terminating in basements or below–grade crawl spaces shall be evaluated based on the sanitary safety of the well location and construction, pump installation and condition of the basement or below–grade crawl space in terms of the potential for the well to continuously produce water free from contaminants.

3. Screens may not be replaced on driven–point wells terminating in or extending through basements or below–grade crawl spaces. When a driven–point well screen needs replacement, the driven–point well shall be permanently filled and sealed according to the requirements of s. NR 812.26. Any replacement well shall meet the requirements for new wells in this chapter.

4. Wells terminating in basements or below grade crawl spaces may remain in service if all of the following conditions are met:

a. The well was installed before April 10, 1953, the date after which wells in basements and below grade crawl spaces were no longer allowed.

b. If the well is a driven point, the point was never replaced after April 10, 1953, the date after which wells in basements and below grade crawl spaces could no longer be reconstructed.

c. The well produces water continuously free from contaminants in excess of the drinking water standards of s. NR 812.06.

d. The well casing pipe depth meets the requirements of sub. (1) (b).

e. The well and pump installation are in compliance with all other requirements of this chapter.

(b) *Wells in walkout basements.* Wells terminating in walkout basements may remain in service if all of the following conditions are met:

1. It is possible to walk directly outside from the walkout basement without walking upstairs or upslope.

2. The surface of the ground around the outside exit door of the walkout basement slopes down away from the door.

3. The well and pump installation are accessible for repair and removal.

4. The well produces water continuously free from contaminants in excess of the drinking water standards of s. NR 812.06.

5. The well casing pipe depth meets the requirements of sub. (1) (b).

6. The well and pump installation are in compliance with all other requirements of this chapter.

7. The walkout basement is not subject to flooding

8. The walkout basement is not in a floodway or floodplain.

(10) DRIVEWAY RAMPS. A well may terminate within a driveway ramp, with or without a variance, before October 1, 2014, if the installation complies with the requirements for driveway ramps in Subchapter III.

(11) WORK ON EXISTING INSTALLATIONS. (a) *Pits or Well Deepening*. Before extending any well casing pipe out of a pit, or deepening a well constructed by another individual, the water well driller or the pump installer shall measure the well casing pipe depth to verify that the casing depth complies with the rules in effect at the time the well casing was installed including any special well casing depth area requirements or variances, if no confirmable well construction report can be found for the well. Well details, including location, well casing pipe depth, total well depth, distances to possible contaminant sources, and well owner information shall be entered on a form and submitted to the department in accordance with s. NR 812.22 (10) or 812.41 (4).

(b) *Sample Faucet.* When doing any pump work involving replacement of the pressure tank, or work involving the water supply piping inside the basement or building, upstream of the pressure tank, the pump installer shall install a complying sample faucet if one is missing. The pump installer shall also replace any sample faucet that does not comply with the requirements of s. NR 812.34, including any faucet that was installed before February 1, 1991 and including replacement of any threaded sample faucet with a sample faucet without threads. The pump installer or well owner may not file the threads off a noncomplying sample faucet.

Note: This requirement applies to sample faucets installed before and after February 1, 1991.

(c) *Casing Height.* 1. When doing any water well work or pump installing work that involves entry into a well located outside a building, the water well driller or pump installer shall extend the well casing pipe to at least:

a. 12 inches above grade for any well that is less than 8 inches above grade and was installed before February 1, 1991.

b. 12 inches above grade for any well that is less than 12 inches above grade and was installed on or after February 1, 1991.

2. When the well casing height above grade does not comply with subd. 1. a. or b., the water well driller or the pump installer shall measure the well casing pipe depth to verify that the well casing pipe depth complies with the rules in effect at the time that the well was constructed, if there is no confirmable well construction report available for the well. Well details, including location, well casing pipe depth, total well depth, distances to possible contaminant sources and well owner information shall be entered on a form and submitted to the department in accordance with s. NR 812.22 (10) or 812.41 (4)

3. The extension of the well casing pipe shall be in accordance with sub. (12).

(d) *Vermin–Proof Well Cap or Seal.* When doing any water well work or pump installing work that involves entry into a well, the water well driller or pump installer shall replace any non–vermin proof well cap with an approved vermin–proof cap or sanitary well seal.

(e) *Nonpressure Conduit.* When any water well drilling work or pump installing work is performed involving entry into a well that has a nonpressure conduit, the water well driller or pump installer shall evaluate the integrity of the nonpressure conduit and its connection to the well casing pipe by performing a pressure test. If the nonpressure conduit fails the pressure test, the installation shall be changed to a pitless connection. The nonpressure conduit shall be completely eliminated by cutting off the well casing pipe below the nonpressure conduit and extending the well casing pipe to at least 12 inches above grade and installing pressurized discharge piping according to the requirements of ss. NR 812.28, 812.31 and 812.32 (4). The extension of the well casing pipe shall be in accordance with sub. (12).

(f) *Corrections.* The features in pars. (a) to (e) must be corrected and may not be noted on a noncomplying features form instead of correcting the noncomplying feature or testing the nonpressure conduit.

(12) WELL CASING HEIGHT EXTENSIONS FOR STEEL WELL CASING PIPE. (a) The well casing pipe in the ground may only be extended up if it has the minimum wall thickness for its diameter according to the requirements of s. NR 812.17 Table V and is not in a deteriorated condition. If it does not meet these requirements, the well shall be filled and sealed according to the requirements of s. NR 812.26. The well casing pipe extension (riser pipe) shall meet the requirements of s. NR 812.17 (2) and shall be attached to the top of the existing casing by one of the following methods:

1. Cutting off the well casing pipe in the ground squarely, providing a bevel for the top of the well casing pipe and making a watertight weld between the beveled end of the well casing pipe and the beveled end of the riser pipe.

Removed by Register March 2015 No. 711. For current adm. code see: http://docs.legis.wisconsin.gov/code/admin_code.

2. Cutting threads on the top of the well casing pipe and the bottom of the riser pipe with a pipe die and using a full–standard recessed threaded coupling to provide a watertight connection between the two pipes.

3. Welding a properly–sized, snug–fitting, pipe nipple, beveled on the lower end and having threads on the upper end, and meeting the requirements of s. NR 812.17 (2), to the beveled end of the well casing pipe. The top of the well casing pipe and the bottom of the pipe nipple to be welded shall both have beveled ends. The pipe nipple shall be welded on the inside and the outside contact surfaces of the pipe nipple. The riser pipe shall be threaded to the top of the pipe nipple.

4. Reaming out the threads of a full standard recessed coupling, at least 1/3 the length of the coupling, and welding the coupling to the top of the cut–off well casing pipe with a fillet weld on the inside and outside contact surfaces of the coupling. The riser pipe shall be threaded into the top of the coupling.

5. The threaded lower end of a riser pipe may not be welded to the cut–off end of a well casing pipe.

6. Riser pipe may not be connected to the well casing pipe by means of a compressible joint.

(13) DISINFECTION, FLUSHING AND SAMPLING. When working on existing water wells or pump installations, the well and water system shall be disinfected, flushed and sampled in accordance with ss. NR 812.22 and 812.41.

History: Cr. Register, January, 1991, No. 421, eff. 2–1–91; am. (1) (intro.), (a), (b), (2) (intro.), (a), (d), (5) (b), (6) (a) 2., (b) 2., (e), (7) (intro.) (9) (a) 1., cr. (4) (f), (6) (b) 4., (g), (7) (e), Register, September, 1994, No. 465, eff. 10–1–94; correction in (6) (a) 3. made under s. 13.93 (2m) (b) 7., Stats., Register, May, 2000, No. 533; CR 00–111: am. (1) (b), Register October 2001 No. 550, eff. 11–1–01; correction in (6) (a) 3. made under s. 13.92 (4) (b) 7., Stats., Register December 2011 No. 672; **CR 13–099: am. (1) (title), (intro.), (a), renum. (1) (b) to (b) 1., cr. (1) (b) 2. to 5., am. (1) (c), (2) (title), (intro.), (a), (c), renum. (d) to (d) 1. to 3. and am., renum. (3) to (3) (a) to (c), am. (4) (f), cr. (4) (g), (h), am. (6) (intro.), renum. (6) (a) 2. to 2. a., b. and am., cr. (6) (a) 2. c., am. (6) (b) 4., r. (7) (a), renum. (7) (intro.) to (7) (a), (7) (b) to (e) to (7) (a) 1. to 4., cr. (7) (b), (c), renum. (8) to (8) (b) to (d) and am., cr. (8) (a), (e), am. (9) (a) (title), 1., renum. (9) (a) 2. to (a) 2., 3. and am., cr. (9) (a) 4., am. (9) (b) (intro.), 2., 3., cr. (9) (b) 5. to 8., cr. (10) to (13) Register September 2014 No. 705, eff. 10–1–14; correction in numbering (11) (c) to (f) made under s. 13.92 (4) (b) 1., Stats., correction in (3) made under s. 13.92 (4) (b) 2., Stats., corrections in (2) (d) 1. b., (11) (c) 2., (f) made under s. 13.92 (4) (b) 7., Stats., September 2014 No. 705.**

Subchapter V — Variances

NR 812.43 Variances. (1) When strict compliance with the requirements of this chapter is not feasible, a variance may be requested. All variance requests shall be in writing, except for situations that may require an immediate response, in which case a variance may be requested verbally from the owner, or the owner's agent, and a verbal variance may be granted by the department to be followed up with a written confirmation. If the verbal request is made by the owner's agent, the agent shall provide confirmation of the owner's concurrence with the request. A variance request shall include the names of the owner or owners and, if known, the well or heat exchange driller, well constructor or pump installer. The reason or reasons compliance with the requirements for this chapter is not feasible shall also be provided. The department may require the owner or the owner's agent to submit additional information necessary for the department to determine if a variance is justified. The owner or owners or the owner's agent shall sign the variance request. The department may condition the issuance of a variance by requiring additional construction or installation features to safeguard the groundwater and water supplied by the installation from contamination. Failure to comply with the conditions of a variance or the applicable requirements of this chapter voids the variance approval.

(a) A variance request to s. NR 812.08 (4) (g) 1., for an existing water supply well within 1,200 feet of a proposed landfill or landfill expansion, shall be signed and submitted to the department by the owner of the well or by the owner of the landfill. Both parties shall have the right to appeal the variance approval, pursuant to ch. 227, Stats.

1. In cases where the application for a variance has been submitted by the landfill owner, the application shall include documentation that written notification of the variance request has been provided to any well owner meeting conditions under s. NR 812.08 (4) (g) 1.

2. In cases where the application for a variance has been submitted by the well owner, the application shall include documentation that written notification of the variance request has been provided to the landfill owner.

(b) A variance request to s. NR 812.08 (4) (g) 1. for an existing water supply well within 1,200 feet of a landfill may be granted by the department where conditions warrant, using the concept of comparable protection. Comparable protection may be provided by appropriate measures including, but not limited to a deeper well casing depth setting, specific grouting materials or methods, specific drilling methodology or additional well water sampling results. These measures will be determined by the department for the purpose of safeguarding the groundwater and the water supply from potential sources of contamination.

(c) A variance request to s. NR 812.08 (4) (g) 1. for a well to be constructed within 1,200 feet of a landfill not subject to expansion shall be signed and submitted to the department by the owner of the well. If a variance is granted, the department shall notify the landfill owner. If the landfill owner is unknown, the department shall notify the municipality where the landfill is located.

(2) The department may allow a high capacity well with a pumping capacity less than 70 gallons per minute to be constructed and to be installed with a pump according to low capacity standards if well water depressions and aquifer characteristics warrant less stringent construction requirements.

History: Cr. Register, January, 1991, No. 421, eff. 2–1–91; am. (1), Register, September, 1994, No. 465, eff. 10–1–94; CR 05–020: rn. (1) to be (1) (intro.) and am., cr. (1) (a) to (d) Register January 2006 No. 601, eff. 2–1–06; **CR 13–096: am. (1) (intro.), CR 13–099, am. (1) (intro.), r. (1) (d) Register September 2014 No. 705, eff. 10–1–14.**

Subchapter VI — Property Transfer Well Inspections

NR 812.44 Property transfer well inspections. This subchapter applies to all water supply wells as defined in s. 280.30, Stats., used for any potable or nonpotable purpose. A well and pressure system inspection is not required at the time of property transfer, though if one is conducted, the inspection shall be in accordance with this chapter and ch. NR 146.

Note: "Water supply well" is defined in s. 280.30, Stats., to mean "an excavation or opening into the ground made by digging, boring, drilling, or other method that supplies water for any purpose."

(1) LICENSING. (a) An individual may not for compensation, in contemplation of a transfer of real property, conduct an inspection of the real property for the purpose of locating or evaluating water supply wells or pressure systems or wells that must be filled and sealed on the real property, unless the individual is a licensed water well driller or a licensed pump installer.

(b) Only licensed individual water well drillers or licensed individual pump installers may conduct an inspection, or make any statement or offer any opinions regarding the existence or nonexistence of wells that need to be filled and sealed; or the location, compliance, condition, capacity or performance of a well and pressure system for compensation, at the time of property transfer.

(c) If the only work to be done is collecting water samples for analysis at time of property transfer and the laboratory test results are reported by the certified laboratory on a laboratory form and no other statements are made or opinions offered by the individual who collected the sample or by the laboratory or by anyone else, regarding the location, compliance, condition, capacity or performance of the well or pressure system or the location or existence or nonexistence of wells that need to be filled and sealed then the samples may be collected by someone other than a licensed water well driller or licensed pump installer.

Removed by Register March 2015 No. 711. For current adm. code see: http://docs.legis.wisconsin.gov/code/admin_code.

(d) County employees are not required to obtain a well driller or pump installer license to conduct property transfer well inspections if the county has adopted a Level 3 county delegation program under ch. NR 845 and the inspections are conducted as part of their duties as county employees. Property transfer well inspections performed by Level 3 delegated county employees shall be conducted in accordance with the evaluation criteria in this subchapter and using the department form specified for property transfer well inspections.

(2) EQUIPMENT. Licensed individuals conducting property transfer well inspections shall be adequately equipped to conduct inspections.

Note: Recommended equipment includes, where applicable, a well casing depth measuring device, GPS unit, computer, internet service, digital camera and magnetic locator.

(3) FORMS AND INSTRUCTIONS. Licensed water well drillers or licensed pump installers, when conducting property transfer well inspections, shall use the department form specified for that purpose. The form shall be completed in full according to department instructions and shall be true and accurate. Inspectors shall provide the person who requested the inspection with the completed property transfer well inspection form. The inspector may attach their own forms or letters, provided those forms are not represented to be part of the department form. Use of the department form does not imply department approval of the well and pressure system. The property transfer well and pressure system inspection form shall not be submitted to the department except in the case of a variance request. After the department has developed an online entry system for submitting variance requests, the inspector shall submit the variance request, with the inspection form, laboratory test reports, and photos electronically.

(4) SAMPLES. Any property transfer well inspection shall include the collection of water samples to be tested for coliform bacteria, nitrate, and arsenic for each potable well on the property. Any property transfer well inspection shall include the collection of a water sample to be tested for coliform bacteria for each nonpotable well on the property. The coliform test shall be analyzed by a laboratory certified for bacteriological testing of drinking water. The nitrate test shall be analyzed by a laboratory certified for nitrate analysis of water. The arsenic test shall be analyzed by a laboratory certified for arsenic analysis of water. Laboratory test reports shall not be submitted to the department except in the case of a variance request. Laboratory test reports for coliform bacteria, nitrate, and arsenic shall be provided to the person that requested the inspection.

(5) EVALUATION CRITERIA. (a) A well and pressure system shall be evaluated for compliance with the requirements of this chapter in effect at the time of construction or installation, except that well and pressure systems installed before February 1, 1991 shall comply with the standards of subchapter IV. If a well and pressure system was ever used as a potable water supply, it shall be evaluated for compliance with the ch. NR 812 standards for potable water supplies. The inspection shall include all wells on the property.

(b) The following features of all wells and pressure systems on the property shall be considered during a property transfer well inspection and shall include any corrective measures necessary on the inspection form as follows:

1. The need for a more comprehensive search on the property, a diligent search for wells that need to be filled and sealed, or need for additional research when there are indications that potential violations may exist which are not fully identifiable as part of the basic inspection outlined in this paragraph. to 36. Potential violations include a possible unused well, a well possibly located in a floodway or floodplain, or a well possibly located too close to a potential contamination source, including a landfill. The department shall develop guidance for conducting comprehensive searches that fall outside a basic property transfer well and pressure system inspection.

2. The existence of any unused or noncomplying well that is required to be filled and sealed or the existence of any well that was filled and sealed by an unlicensed individual or unregistered person after June 1, 2008.

3. The existence of any well having either stovepipe or thin–walled well casing pipe.

4. The existence of any unsanitary or noncomplying dug well.

5. The existence of any noncomplying or unprotected buried pump suction line.

6. The existence of any noncomplying well pit or subsurface pumproom (alcove).

7. The existence of any noncomplying non–walkout basement or below–grade crawl space well.

8. Well casing pipe in poor condition including significant corrosion, cracks or other damage.

9. The existence of any potential source of contamination located less than the required minimum separation distance from the well, as provided in ss. NR 812.08 and 812.42 (1) (a).

10. The existence of a well in a floodway or flood fringe.

11. The existence of a low area or drainage swale near or around the well site that places the well at risk from localized flooding.

12. The existence of any visible cross–connection either between the private water piping system and a sewerage piping system or between the well and a community water system.

13. The existence of a driven–point (sand–point) well installed on or after February 1, 1991 for which a well construction report is not available or a driven–point well of any construction date that has less than 25 feet of well casing pipe, not including the screen.

14. The existence of noncomplying nonpressure conduit, either horizontal or vertical.

15. The existence of a noncomplying hand pump.

16. The existence of an offset pump or offset pump piping that is not located at least 12 inches above a basement floor.

17. The existence of a noncomplying yard hydrant installed upstream of the pressure tank after October 1, 2014, or the existence of any yard hydrant installed in or on a well.

18. The existence of any visible noncomplying pump suction pipe, discharge pipe, or noncomplying water supply piping.

19. The existence of noncomplying flowing well installation.

20. The existence of a check valve in a noncomplying location.

21. The lack of a complying well seal or well cap.

22. Noncomplying casing height above grade or above a floor.

23. The pump electrical wires at the wellhead are not properly enclosed in conduit.

24. The well and pressure system lacks a sample faucet either on the tee of the pressure tank or upstream of the pressure tank.

25. The sample faucet is noncomplying.

26. The existence of an extreme health or safety hazard not noted elsewhere on the inspection form.

27. The well casing pipe at the ground surface is less than six inches in diameter for wells terminating in limestone, dolomite, shale, quartz, or granite.

(c) The following comments or items of concern shall be noted on the inspection form:

1. The existence of a driven–point well installed before February 1, 1991, with a strong likelihood it contains less than 25 feet of casing pipe below the ground surface, not including screen.

2. The inability of the contractor to find a well construction report for the well in department records either because one was never filed, the report had an incorrect geographic location, or the report was misfiled in department records.

Removed by Register March 2015 No. 711. For current adm. code see: http://docs.legis.wisconsin.gov/code/admin_code.

3. The existence of a well located in a special well casing depth area.

4. The existence of a two–wire submersible pump, manufactured prior to 1979, in a well.

5. Evidence of some corrosion, but not serious corrosion, on the visible portion of the well casing pipe.

6. The existence of a well having an inaccessible or difficult location with respect to any future well construction or rehabilitation work.

7. The existence of a well having an inaccessible or difficult location with respect to any future pump installation work.

8. The existence of a non–vermin proof well cap or well seal. The cap or seal is required to be replaced with an approved vermin–proof cap or seal whenever any well drilling or pump installing work is done on the well and pressure system which involves removal of the well cap or well seal.

9. The inspector may note any concerns regarding the condition, capacity or performance of the well and pressure system in the inspection, including well or pump yield, though it is not required for a property transfer well inspection.

(d) The inspector shall indicate whether the well and pressure system comply with this chapter; comply with this chapter with the exception of needing a more comprehensive search or additional research; or does not comply with this chapter.

History: CR 13–099: cr. Register September 2014 No. 705, eff. 10–1–14.

Subchapter VII — Citations

NR 812.45 Citations. The department may take enforcement action against any person who violates any of the provisions listed in sub. (1). The department shall consider the severity, duration, frequency, and environmental or health risks of the violation. The department will evaluate and address violations in accordance with the department stepped enforcement process. The department shall provide written notice of a violation and provide an opportunity to meet pursuant to s. 280.98 (4), Stats., before issuance of a citation.

(1) Citations may be issued for violations relating to any of the following:

(a) Licensing and registration as provided in this chapter, ch. 280, Stats., or s. NR 812.26 (9).

(b) Disinfection requirements, as provided under ss. NR 812.22 (4), 812.27 (5), 812.41 (1), or 812.42 (13).

(c) Sampling and reporting requirements, as provided under ss. NR 812.04 (2), 812.09 (4) (a) 3., 812.10 (11) or (12), 812.22 (6), (7), (8), (9), or (10), 812.26 (3) or (8), 812.27 (6), 812.41 (3) or (4), 812.42 (13), or 812.44 (3) or (4).

(d) Water systems that were installed before February 1, 1991, as provided under s. NR 812.42.

(e) Well or drillhole filling and sealing, as provided under s. NR 812.09 (4) (a) 5. or 812.26.

(2) Prior to issuing a citation under par. (b), the department shall do all of the following:

(a) Issue a written warning outlining the violation.

(b) Schedule an enforcement conference with the alleged violator. The alleged violator is allowed to bring a representative to the enforcement conference.

(3) If the alleged violator does not attend the enforcement conference or make alternative arrangements to the department's satisfaction, the department shall consider the requirement of s. 280.98, Stats., to be met, and shall base its enforcement decision on all available information.

History: CR 13–099: cr. Register September 2014 No. 705, eff. 10–1–14; correction in numbering made under 2. 13.92 (4) (b) 1., Stats., correction in (intro.) made under s. 13.92 (4) (b) 7., Stats., Register September 2014 No. 705.

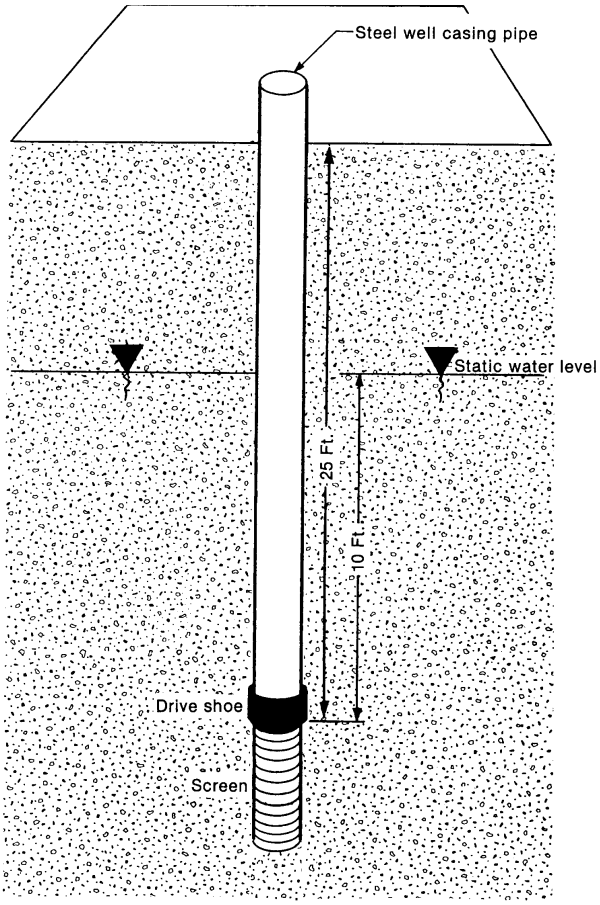

Figure 51. Line A. Percussion methods for low capacity* and nonpotable high capacity wells in unconsolidated aquifers overlain by caving material. Well casing pipe shall extend to the 25–foot depth or 10 feet below the static water level, whichever is greater. The well casing pipe shall be 2 inches minimum diameter and may be driven from the ground surface.

Removed by Register March 2015 No. 711. For current adm. code see: http://docs.legis.wisconsin.gov/code/admin_code.

*Not including school or wastewater treatment plant wells.

The well casing pipe may be driven from the ground surface.

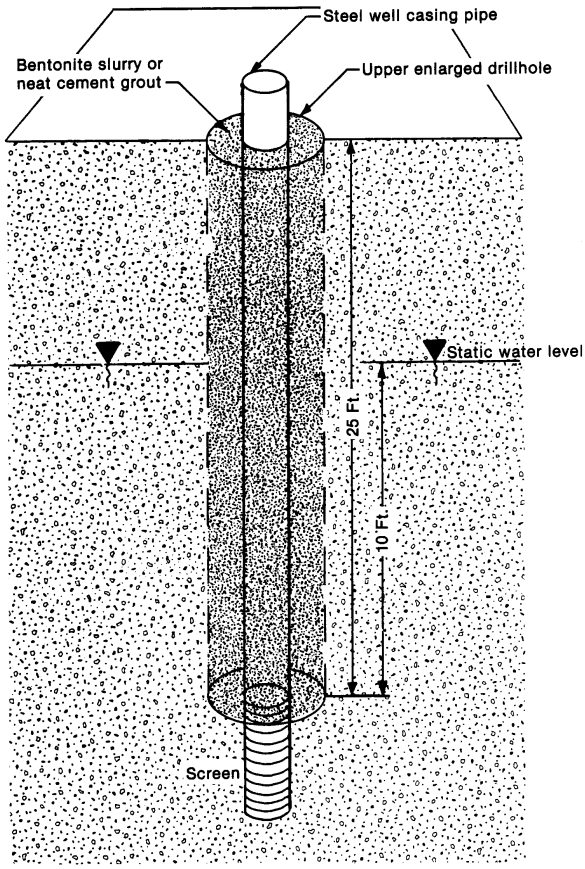

Figure 52. Line A. Rotary methods for low capacity* and nonpotable high capacity wells in unconsolidated aquifers overlain by caving material. Well casing pipe shall extend to the 25−foot depth or 10 feet below the static water level, whichever is greater.

*Not including school or wastewater treatment plant wells.

The upper enlarged drillhole shall be at least 2 inches larger in diameter than the nominal well casing pipe diameter for well casing pipe with welded joints. For threaded and coupled well casing pipe, the diameter shall be at least 4 inches larger than the nominal diameter of the well casing pipe. During construction the upper enlarged drillhole shall be maintained at full diameter by circulating drilling mud.

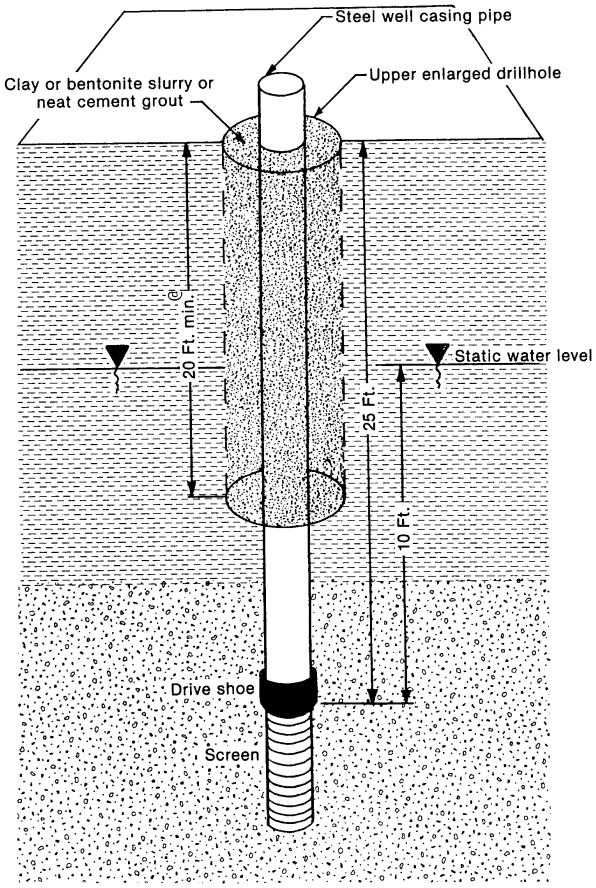

Figure 53. Line B. Percussion methods for low capacity* and nonpotable high capacity wells in unconsolidated aquifers overlain by non−caving material. Well casing pipe shall extend to the 25−foot depth or 10 feet below the static water level, whichever is greater.

*Not including school or wastewater treatment plant wells.

@ The upper enlarged drillhole shall extend to the bottom of any non−caving material or to the 20−foot depth, whichever is the lesser. As an alternative to constructing an upper enlarged drillhole, granular (8−mesh) bentonite may be mounded surrounding the well casing pipe during driving.

Removed by Register March 2015 No. 711. For current adm. code see: http://docs.legis.wisconsin.gov/code/admin_code.

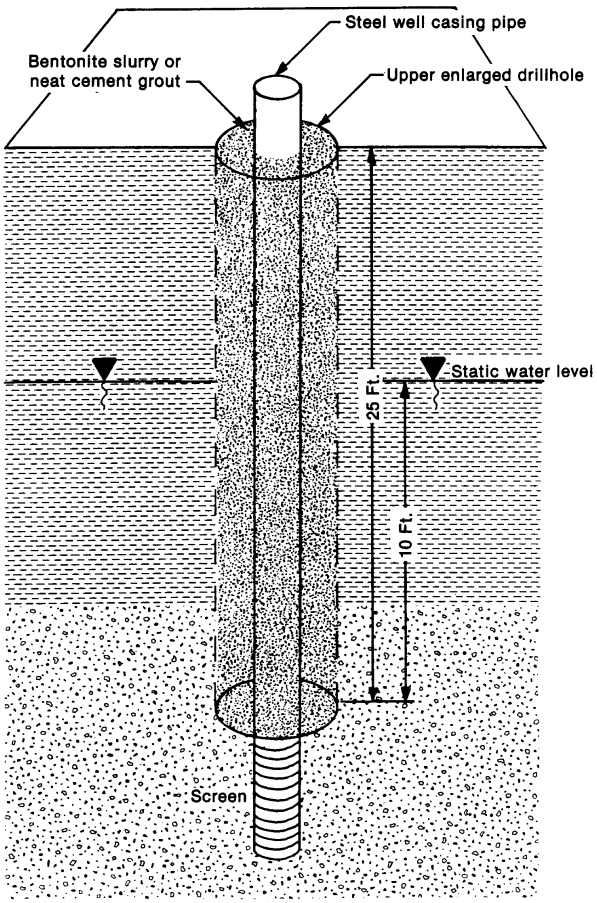

Figure 54. Line B. Rotary methods for low capacity* and nonpotable high capacity wells in unconsolidated aquifers overlain by non−caving material. Well casing pipe shall extend to the 25−foot depth or 10 feet below the static water level, whichever is greater.

*Not including school or wastewater treatment plant wells.

The upper enlarged drillhole shall be at least 2 inches larger in diameter than the nominal well casing pipe diameter for well casing pipe with welded joints. For threaded and coupled well casing pipe, the diameter shall be at least 4 inches larger than the nominal diameter of the well casing pipe. During construction the upper enlarged drillhole shall be maintained at full diameter by circulating drilling mud.

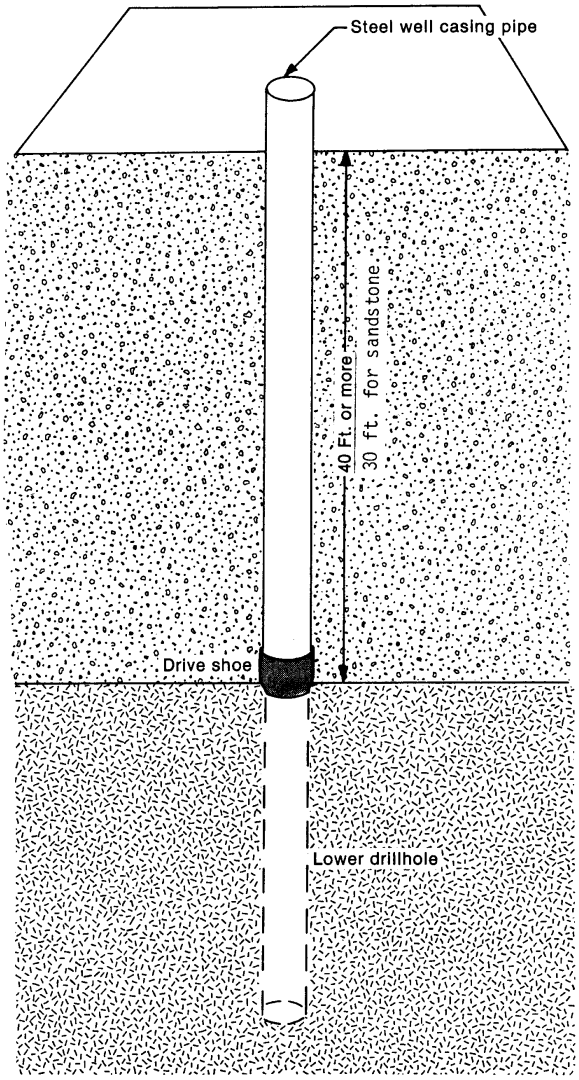

Figure 55. Line C. Percussion methods for low capacity* and nonpotable high capacity wells in all types of bedrock with at least 40 feet of overlying caving material.

The well casing pipe may be driven from the ground surface.

*Not including school or wastewater treatment plant wells.

Removed by Register March 2015 No. 711. For current adm. code see: http://docs.legis.wisconsin.gov/code/admin_code.

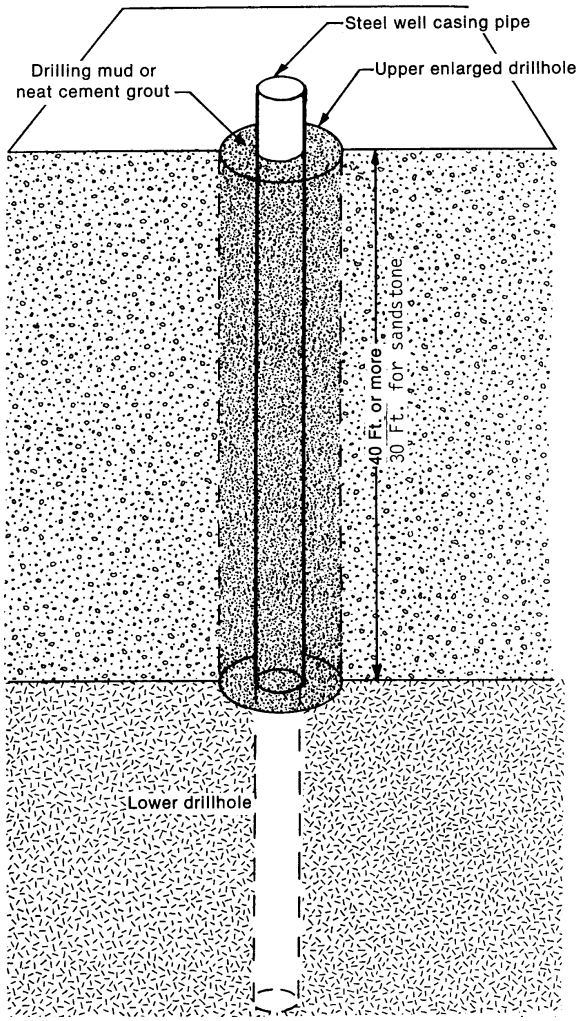

Figure 56. Line C. Rotary methods for low capacity* and nonpotable high capacity wells in all types of bedrock with at least 40 feet of overlying caving material.

*Not including school or wastewater treatment plant wells.

The upper enlarged drillhole shall be at least 2 inches larger in diameter than the nominal well casing pipe diameter for well casing pipe with welded joints. For threaded and coupled well casing pipe, the diameter shall be at least 4 inches larger than the nominal diameter of the well casing pipe. During construction the upper enlarged drillhole shall be maintained at full diameter by circulating drilling mud.

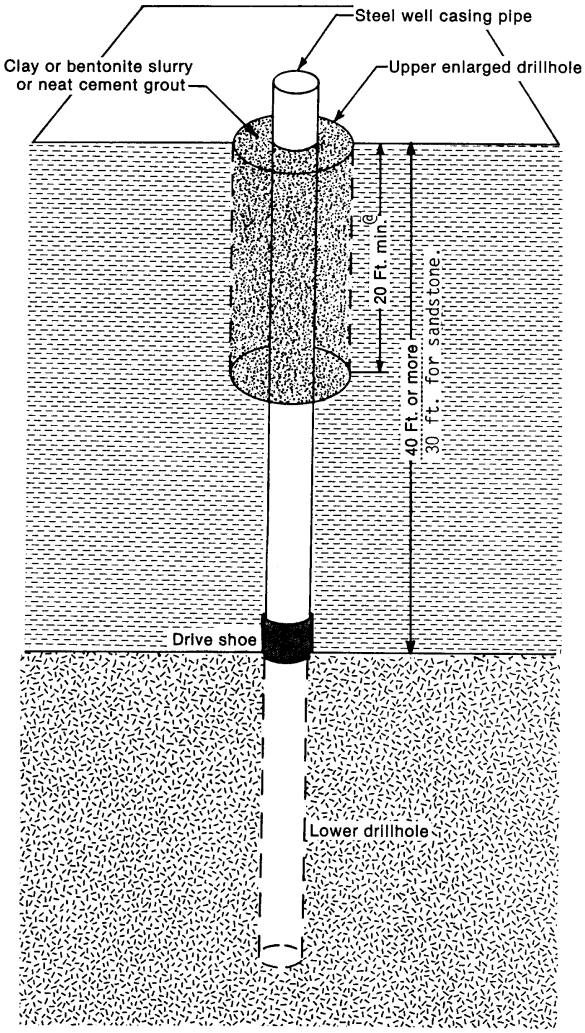

Figure 57. Line D. Percussion methods for low capacity* and nonpotable high capacity wells in all types of bedrock with at least 40 feet of overlying non−caving material.

*Not including school or wastewater treatment plant wells.

The upper enlarged drillhole shall extend to the bottom of any non−caving material or to the 20−foot depth, whichever is the lesser. As an alternative to constructing an upper enlarged drillhole, granular (8−mesh) bentonite may be mounded surrounding the well casing pipe during driving.

Removed by Register March 2015 No. 711. For current adm. code see: http://docs.legis.wisconsin.gov/code/admin_code.

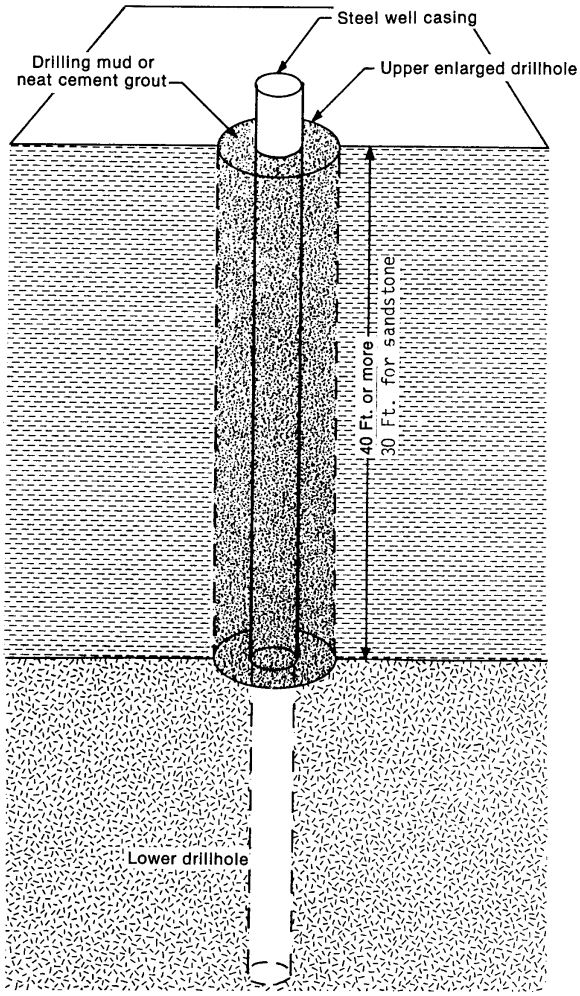

Figure 58. Line D. Rotary methods for low capacity* and nonpotable high capacity wells in all types of bedrock with at least 40 feet of overlying non–caving material.

*Not including school or wastewater treatment plant wells.

The upper enlarged drillhole shall be at least 2 inches larger in diameter than the nominal well casing pipe diameter for well casing pipe with welded joints. For threaded and coupled well casing pipe, the diameter shall be at least 4 inches larger than the nominal diameter of the well casing pipe. During construction the upper enlarged drillhole shall be maintained at full diameter by circulating drilling mud.

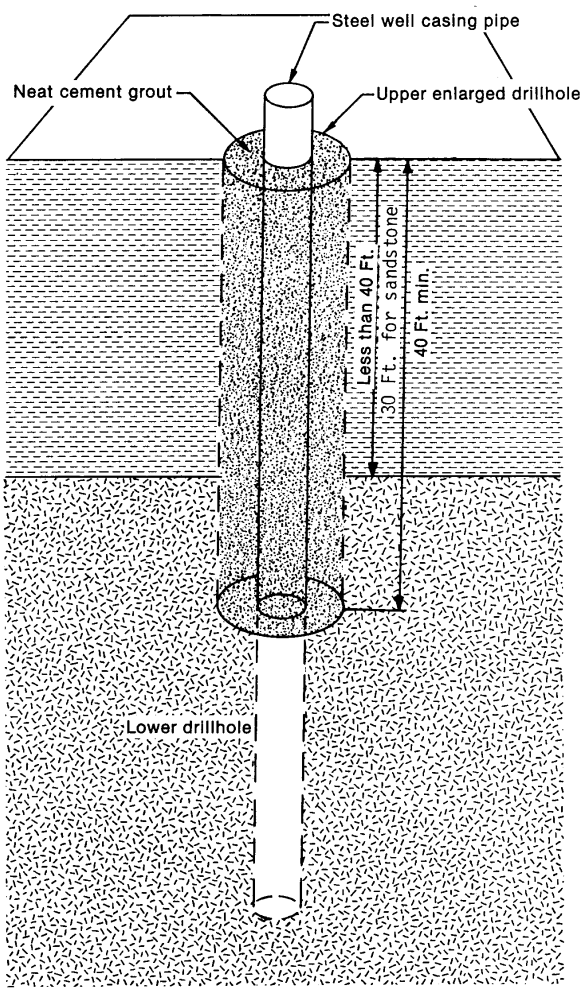

Figure 59. Line E. Percussion methods for low capacity* and nonpotable high capacity wells in all types of bedrock with less than 40 feet of overlying non–caving material.

*Not including school or wastewater treatment plant wells.

Upper enlarged drillhole (diameter at least 2 inches larger than nominal well casing pipe diameter). For well casing pipe with welded joints only.
For threaded and coupled well casing pipe, the diameter shall be at least 4 inches larger than the nominal diameter of the well casing pipe.

*Not including school or wastewater treatment plant wells.

The upper enlarged drillhole shall be at least 2 inches larger in diameter than the nominal well casing pipe diameter for well casing pipe with welded joints. For threaded and coupled well casing pipe, the diameter shall be at least 4 inches larger than the nominal well casing pipe diameter.

Removed by Register March 2015 No. 711. For current adm. code see: http://docs.legis.wisconsin.gov/code/admin_code.

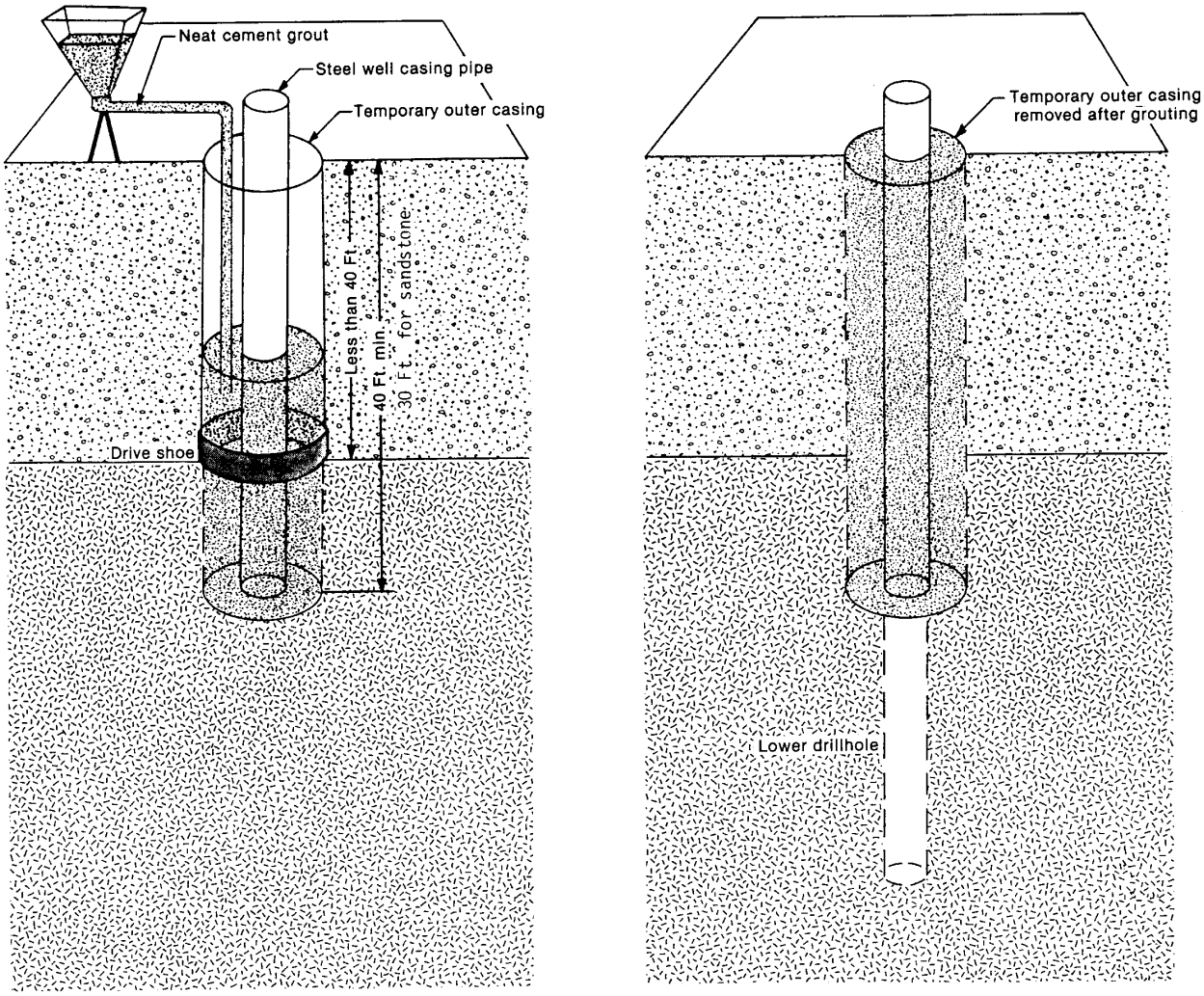

Figure 60. Line E. Percussion methods for low capacity* and nonpotable high capacity wells in all types of bedrock with less than 40 feet of overlying caving material.

*Not including school or wastewater treatment plant wells.

For well casing pipe with welded joints only. For threaded and coupled well casing pipe the diameter shall be at least 4 inches larger than the nominal diameter of the well casing pipe.

Removed by Register March 2015 No. 711. For current adm. code see: http://docs.legis.wisconsin.gov/code/admin_code.

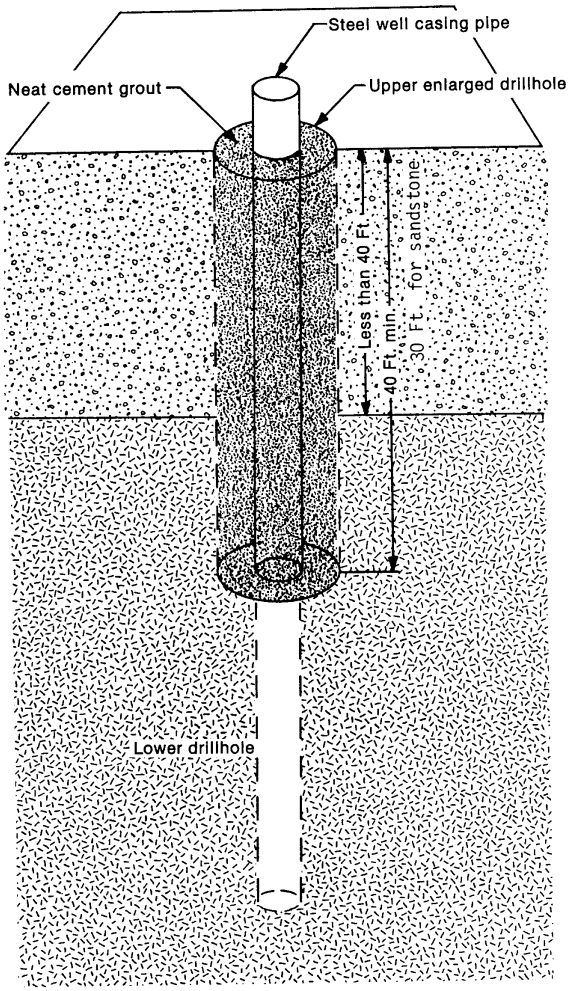

Figure 61. Line E. Rotary methods for low capacity* and nonpotable high capacity wells in all types of bedrock with less than 40 feet of overlying caving material.

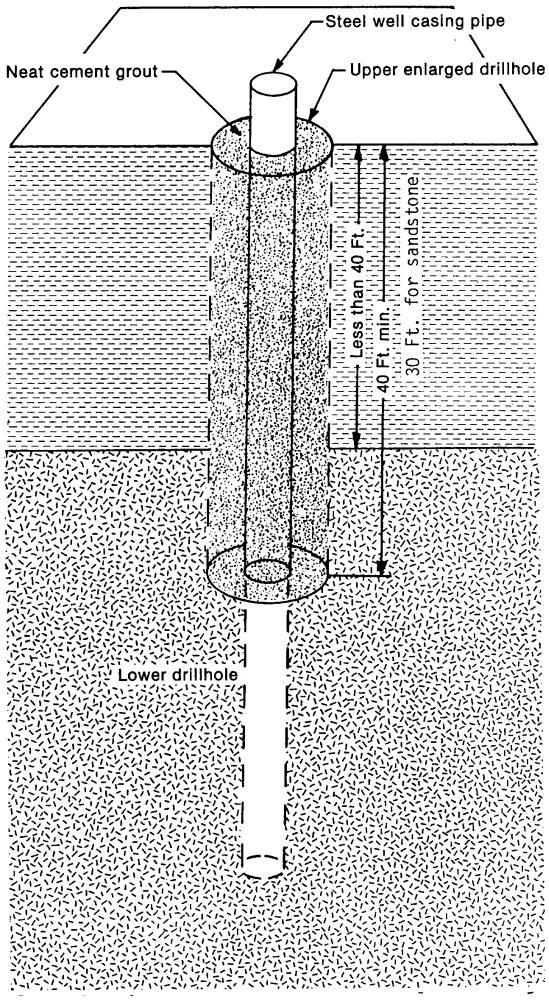

Figure 62. Line E. Rotary methods for low capacity* and nonpotable high capacity wells in all types of bedrock with less than 40 feet of overlying non–caving material.

*Not including school or wastewater treatment plant wells.

The upper enlarged drillhole shall be at least 2 inches larger in diameter than the nominal well casing pipe diameter for well casing pipe with welded joints. For threaded and coupled well casing pipe, the diameter shall be at least 4 inches larger than the nominal well casing pipe diameter.

Removed by Register March 2015 No. 711. For current adm. code see: http://docs.legis.wisconsin.gov/code/admin_code.

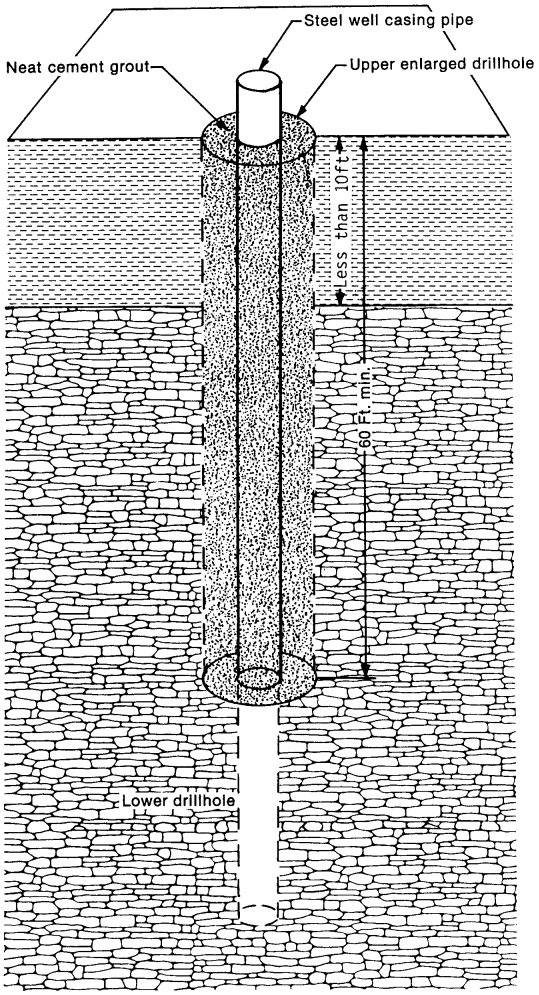

Figure 63. Line F. Rotary and percussion methods for low capacity* and nonpotable high capacity wells in limestone and dolomite with less than 10 feet of overlying material.

*Not including school or wastewater treatment plant wells.

The upper enlarged drillhole shall be at least 2 inches larger in diameter than the nominal well casing pipe diameter for well casing pipe with welded joints. For threaded and coupled well casing pipe, the diameter shall be at least 4 inches larger than the nominal well casing pipe diameter.

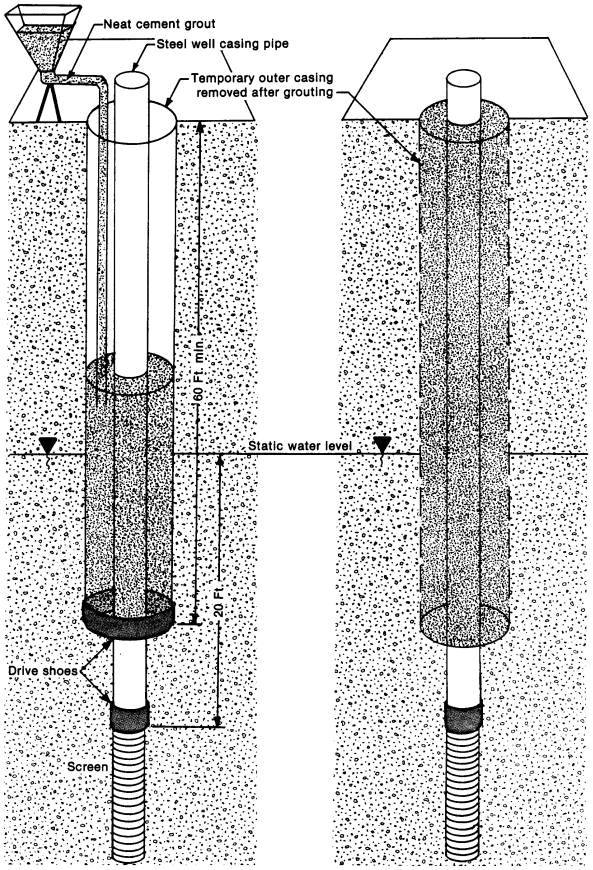

Figure 64. Line G. Percussion methods for potable high capacity, school, and wastewater treatment plant wells in unconsolidated aquifers overlain by caving material. The well casing pipe shall extend to the 60−foot depth or 20 feet below the static water level, whichever is greater.

The diameter of the upper enlarged drillhole shall be at least 3 inches larger than the outside of diameter of the well casing pipe or well casing pipe couplings, if used. The diameter of the well casing pipe and lower drillhole shall be at least 6 inches.

Removed by Register March 2015 No. 711. For current adm. code see: http://docs.legis.wisconsin.gov/code/admin_code.

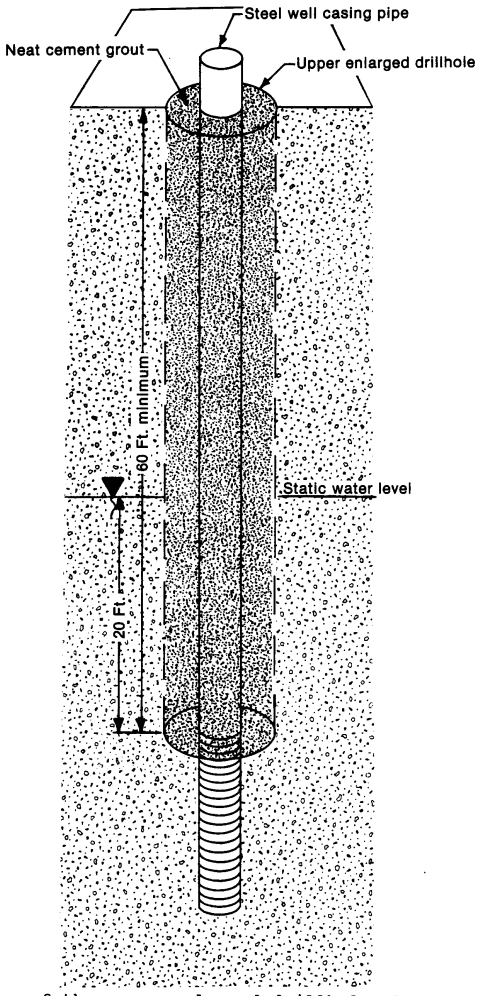

Figure 65. Line G. Rotary methods for potable high capacity, school, and wastewater treatment plant wells in unconsolidated aquifers overlain by caving material. The well casing pipe shall extend to the 60−foot depth or 20 feet below the static water level, whichever is greater.

The diameter of the upper enlarged drillhole shall be at least 3 inches larger than the outside diameter of the well casing pipe or well casing pipe couplings, if used.

During construction the upper enlarged drillhole shall be maintained at full diameter by circulating drilling mud.

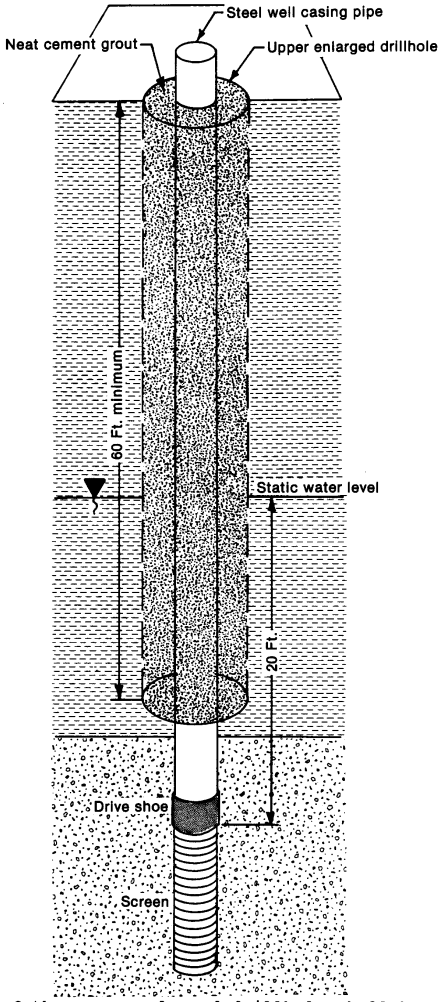

Figure 66. Line H. Percussion methods for potable high capacity, school, and wastewater treatment plant wells in unconsolidated aquifers overlain by non−caving material. The well casing pipe shall extend to the 60−foot depth or 20 feet below the static water level, whichever is greater.

The diameter of the upper enlarged drillhole shall be at least 3 inches larger than the outside diameter of the well casing pipe or well casing pipe couplings, if used.

Removed by Register March 2015 No. 711. For current adm. code see: http://docs.legis.wisconsin.gov/code/admin_code.

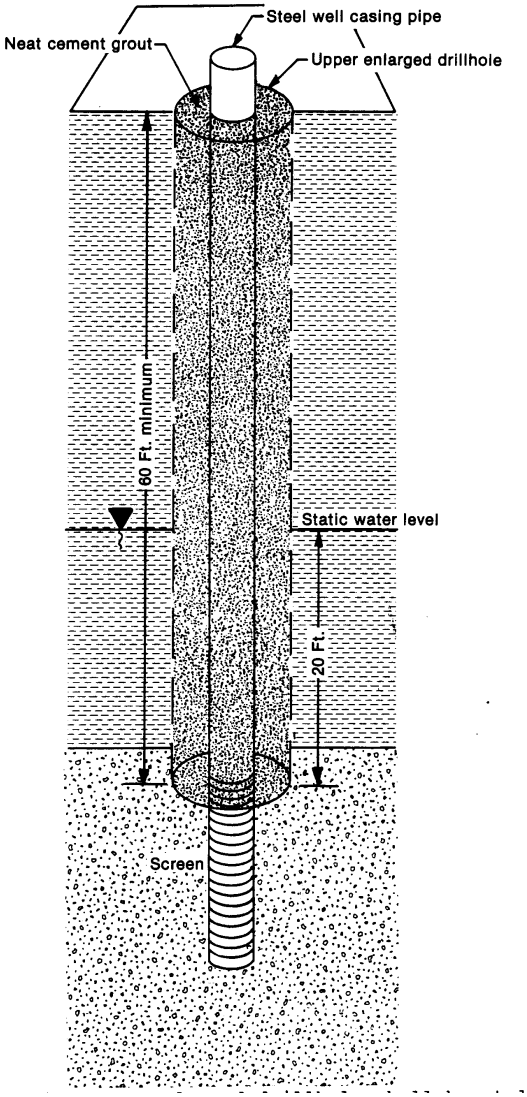

Figure 67. Line H. Rotary methods for potable high capacity, school, and wastewater treatment plant wells in unconsolidated aquifers overlain by non−caving material. The well casing shall extend to the 60−foot depth or 20 feet below the static water level, whichever is greater.

The diameter of the upper enlarged drillhole shall be at least 3 inches larger than the outside diameter of the well casing pipe or well casing pipe couplings, if used.

During construction the upper enlarged drillhole shall be maintained at full diameter by circulating drilling mud.

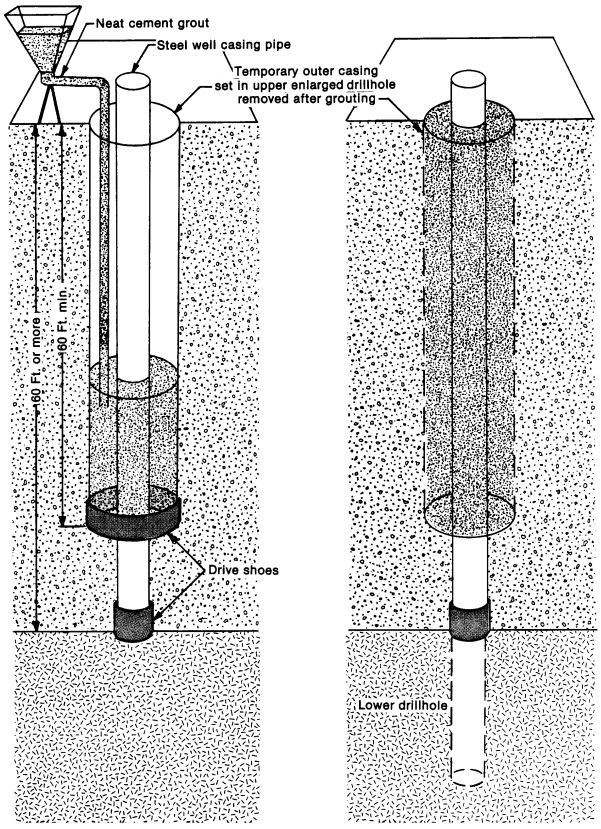

Figure 68. Line I. Percussion methods for potable high capacity, school, and wastewater treatment plant wells in all types of bedrock with at least 60 feet of overlying caving material.

The diameter of the upper enlarged drillhole shall be at least 3 inches larger than the outside diameter of the well casing pipe or well casing pipe couplings, if used. The diameter of the well casing pipe and lower drillhole shall be at least 6 inches.

Removed by Register March 2015 No. 711. For current adm. code see: http://docs.legis.wisconsin.gov/code/admin_code.

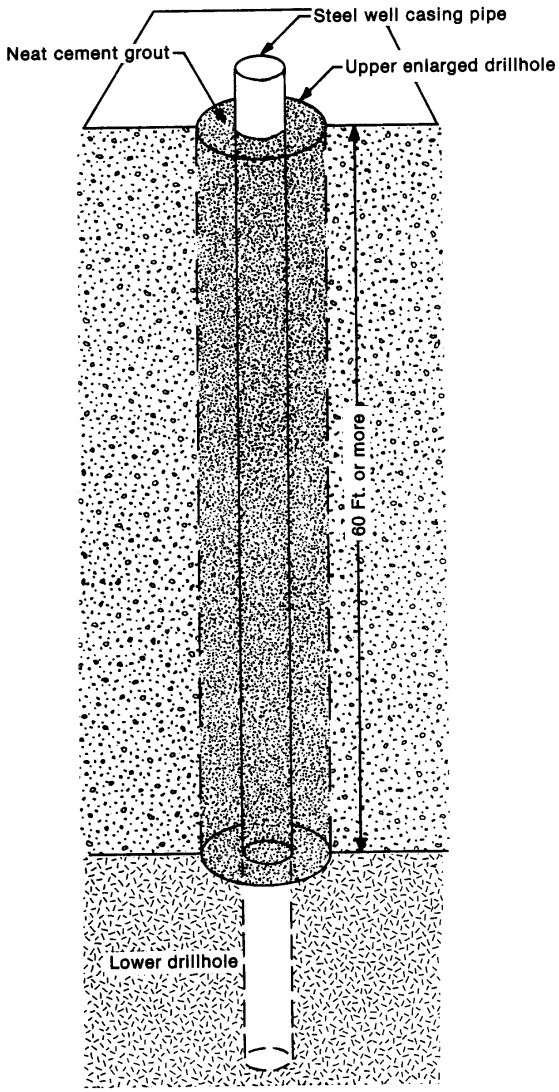

Figure 69. Line I. Rotary methods for potable high capacity, school, and wastewater treatment plant wells in all types of bedrock with at least 60 feet of overlying caving material.

The diameter of the upper enlarged drillhole shall be at least 3 inches larger than the outside diameter of the well casing pipe or well casing pipe couplings, if used. The diameter of the well casing pipe and lower drillhole shall be at least 6 inches.

During construction the upper enlarged drillhole shall be maintained at full diameter by circulating drilling mud.

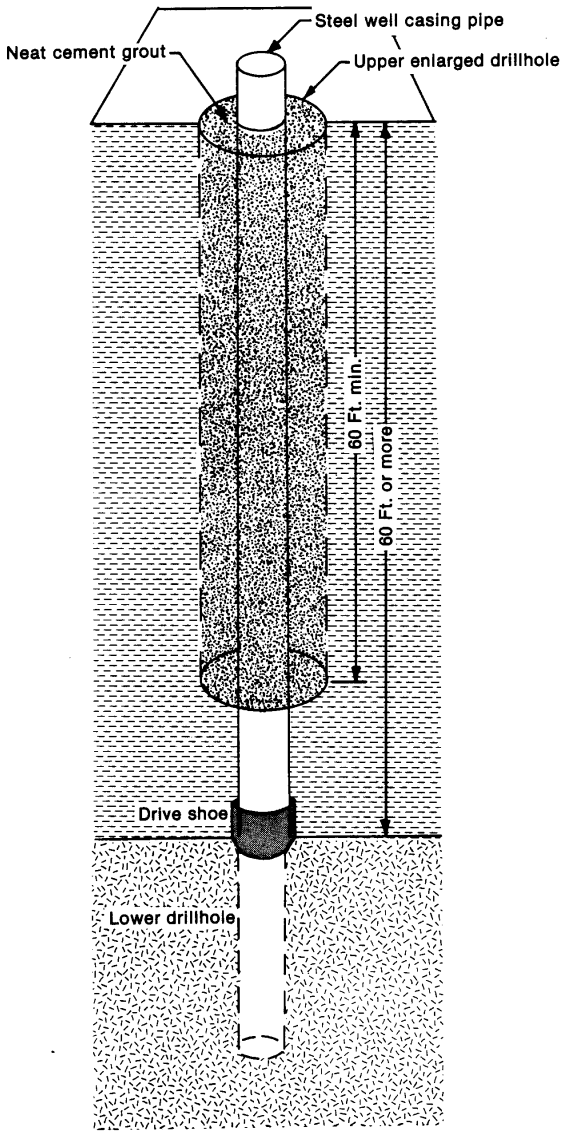

Figure 70. Line J. Percussion methods for potable high capacity, school, and wastewater treatment plant wells in all types of bedrock with at least 60 feet of overlying non−caving material.

The diameter of the upper enlarged drillhole shall be at least 3 inches larger than the outside diameter of the well casing pipe or well casing pipe couplings, if used. The diameter of the well casing pipe and lower drillhole shall be at least 6 inches.

Removed by Register March 2015 No. 711. For current adm. code see: http://docs.legis.wisconsin.gov/code/admin_code.

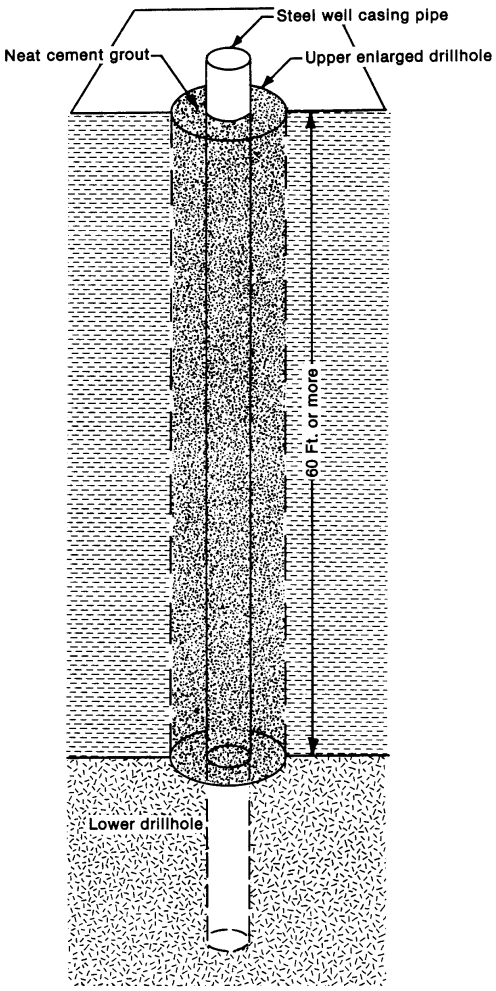

Figure 71. Line J. Rotary methods for potable high capacity, school, and wastewater treatment plant wells in all types of bedrock with at least 60 feet of overlying non−caving material.

The diameter of the upper enlarged drillhole shall be at least 3 inches larger than the outside diameter of the well casing pipe or well casing pipe couplings, if used. The diameter of the well casing pipe and lower drillhole shall be at least 6 inches.

During construction the upper enlarged drillhole shall be maintained at full diameter by circulating drilling mud.

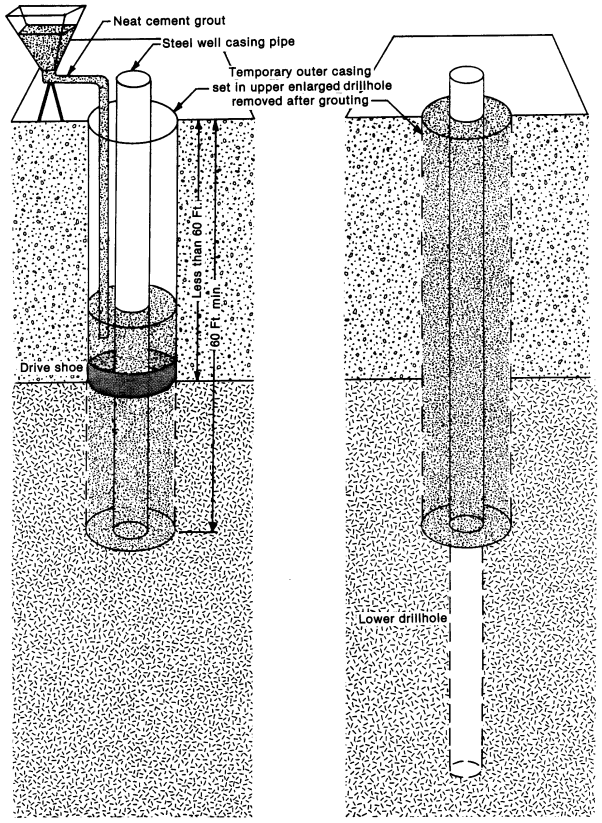

Figure 72. Line K. Percussion methods for potable high capacity, school, and wastewater treatment plant wells in all types of bedrock with less than 60 feet of overlying caving material.

The diameter of the upper enlarged drillhole shall be at least 3 inches larger than the outside diameter of the well casing pipe or well casing pipe couplings, if used. The diameter of the well casing pipe and lower drillhole shall be at least 6 inches.

Removed by Register March 2015 No. 711. For current adm. code see: http://docs.legis.wisconsin.gov/code/admin_code.

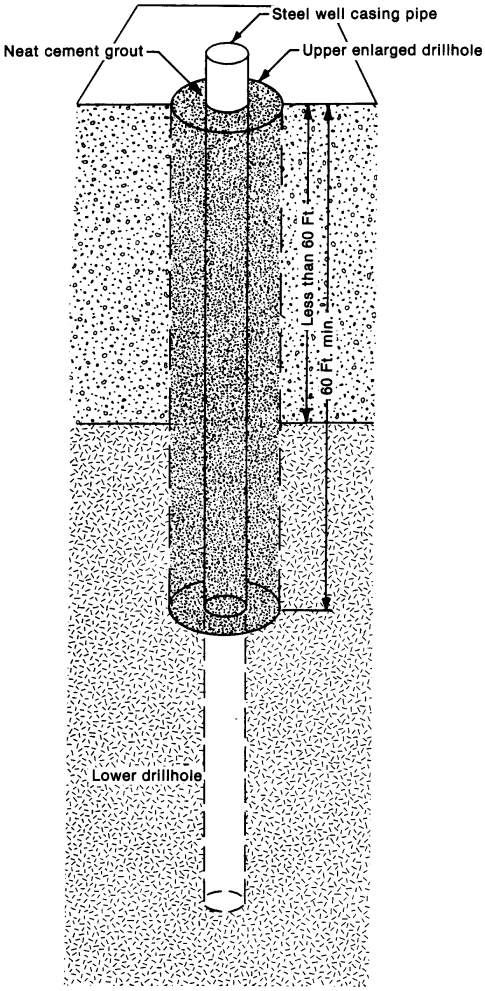

Figure 73. Line K. Rotary methods for potable high capacity, school, and wastewater treatment plant wells in all types of bedrock with less than 60 feet of overlying caving material.

The diameter of the upper enlarged drillhole shall be at least 3 inches larger than the outside diameter of the well casing pipe or well casing pipe couplings, if used. The diameter of the well casing pipe and lower drillhole shall be at least 6 inches.

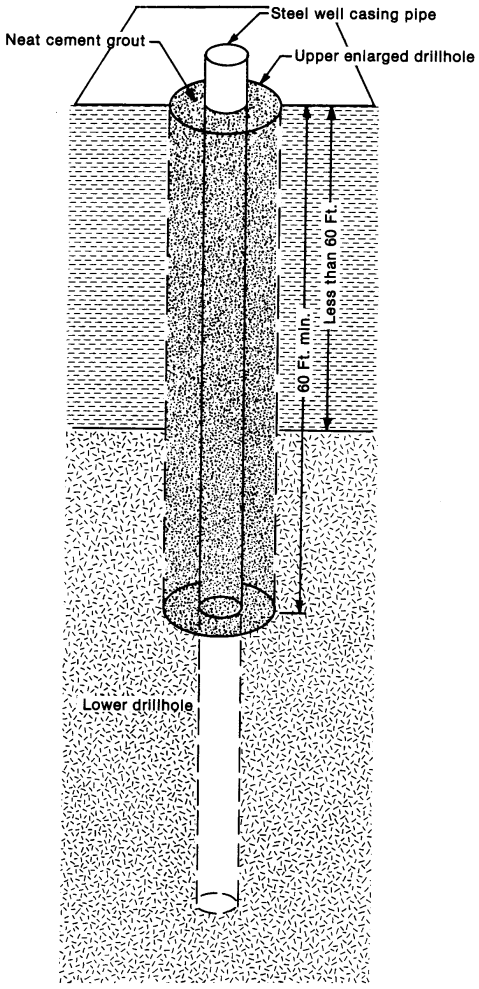

Figure 74. Line L. Percussion methods for potable high capacity, school, and wastewater treatment plant wells in all types of bedrock with less than 60 feet of overlying non−caving material.

The diameter of the upper enlarged drillhole shall be at least 3 inches larger than the outside diameter of the well casing pipe or well casing pipe couplings, if used. The diameter of the well casing pipe and lower drillhole shall be at least 6 inches.

Removed by Register March 2015 No. 711. For current adm. code see: http://docs.legis.wisconsin.gov/code/admin_code.

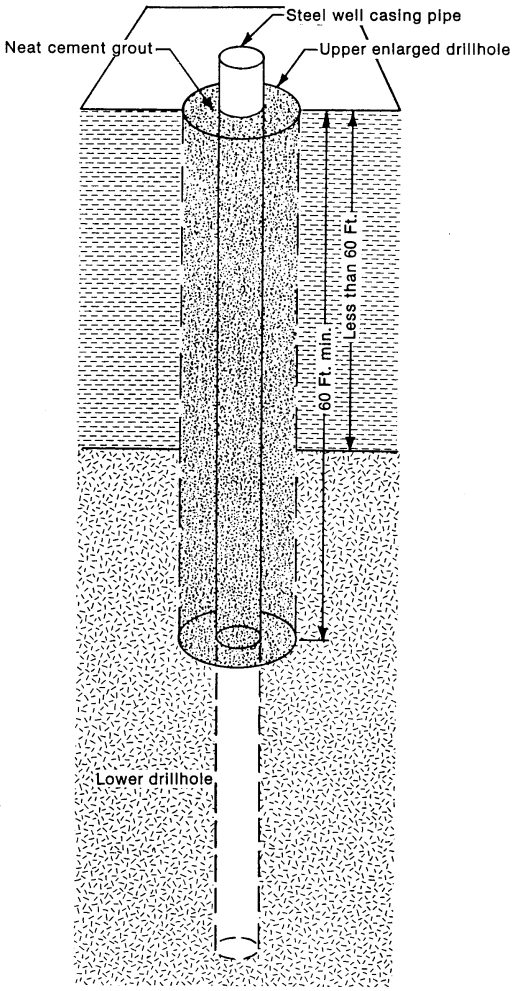

Figure 75. Line L. Rotary methods for potable high capacity, school, and wastewater treatment plant wells in all types of bedrock with less than 60 feet of overlying non−caving material.

The diameter of the upper enlarged drillhole shall be at least 3 inches larger than the outside diameter of the well casing pipe or well casing pipe couplings, if used. The diameter of the well casing pipe and lower drillhole shall be at least 6 inches.